Huck Fasteners
an Alcoa business

DATA SHEET

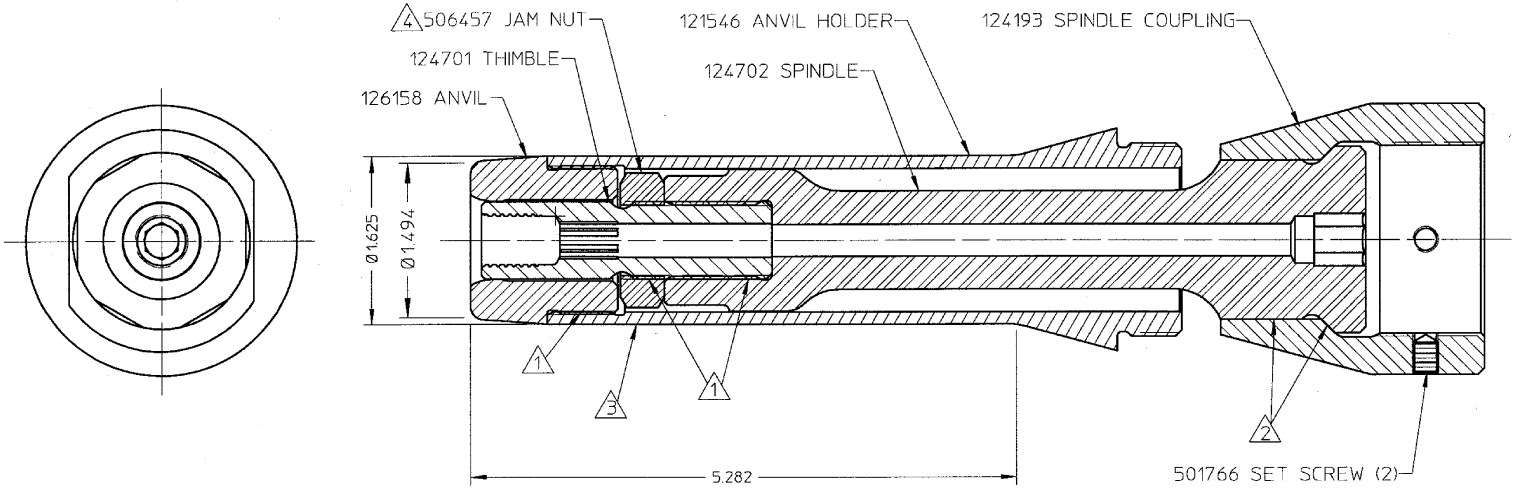

©Huck International, Inc. 1995
©Registered Trademark of Huck International, Inc., Irvine, CA
™Trademark of Huck International, Inc., Irvine, CA

NOTES:

1. APPLY LOCTITE 242 P/N 505016 TO THESE THREADED JOINTS.
2. APPLY GREASE P/N 620030 TO SPINDLE BEFORE ASSEMBLY TO SPINDLE COUPLING.
3. APPLY WARNING STICKER P/N 590273 TO ANVIL HOLDER. DO NOT PERMIT STICKER TO OVERLAP ONTO ANVIL.
4. TORQUE JAM NUT TO 90-100 LB-FT.

99-7313-1

NOSE ASSEMBLY

Huck International, Inc.
Installation System Division
1 Corporate Drive - Kingston, NY 12401

TYPE: HUCK-SPIN, Unshrouded
FOR: 1/2" HUCK-SPIN
TOOL: HS52

OTHER

PRODUCT REVISION: E
REVISED: 06/15/00

INSTALLATION OF HUCK-SPIN NOSE ASSEMBLY

1. Insure that correct actuator rod/disk assembly and drive shaft are installed.

2. Apply grease to the mating surfaces of the spindle and spindle coupling.

3. Make sure that the wrenching ring is flush against the shoulder of the piston.

4. Thread the spindle coupling assembly onto the piston, checking that the spindle engages with the drive shaft by turning the spindle until you can hear or see the air motor turning. Continue threading the spindle coupling onto the piston until it contacts the wrenching ring.

5. Check that the spindle turns freely. If not, back off the spindle coupling approximately 1/4 - 1/2 turn until the spindle turns freely. Rotate the wrenching ring up to the spindle coupling and tighten the spindle coupling set screws.

6. Degrease the thimble threads and apply Loc-Tite (242 Blue) to them.

7. Where applicable, fully thread the jam nut onto the thimble's external thread. Thread the Thimble/Jam nut assembly all the way into the spindle until it bottoms out. Lock the jam nut against the spindle and tighten to approximately 90 -100 ft/lb.
   Note: Some thimbles have internal threads, mating with a spindle external thread. In these instances, apply Loc-Tite (242 Blue) to the spindle external threads and advance the thim ble onto the spindle until the threads bottom out. Back off the thimble until one of the cross-drilled holes on the thimble first exposes the clearance flat on the spindle. Slip the locking dowel pin into the thimble until flush.

8. Install the Anvil Holder/Anvil assembly over the spindle assembly. Add the split rings with spiral retaining ring.

9. Activate tool, checking that Spindle/Thimble assembly turns freely.