Alcoa Fastening Systems

DATA SHEET

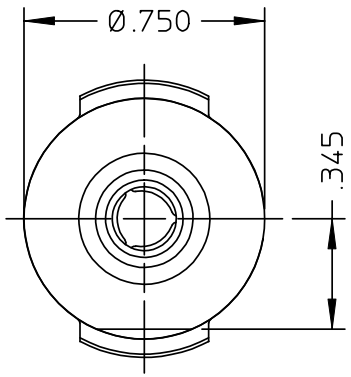

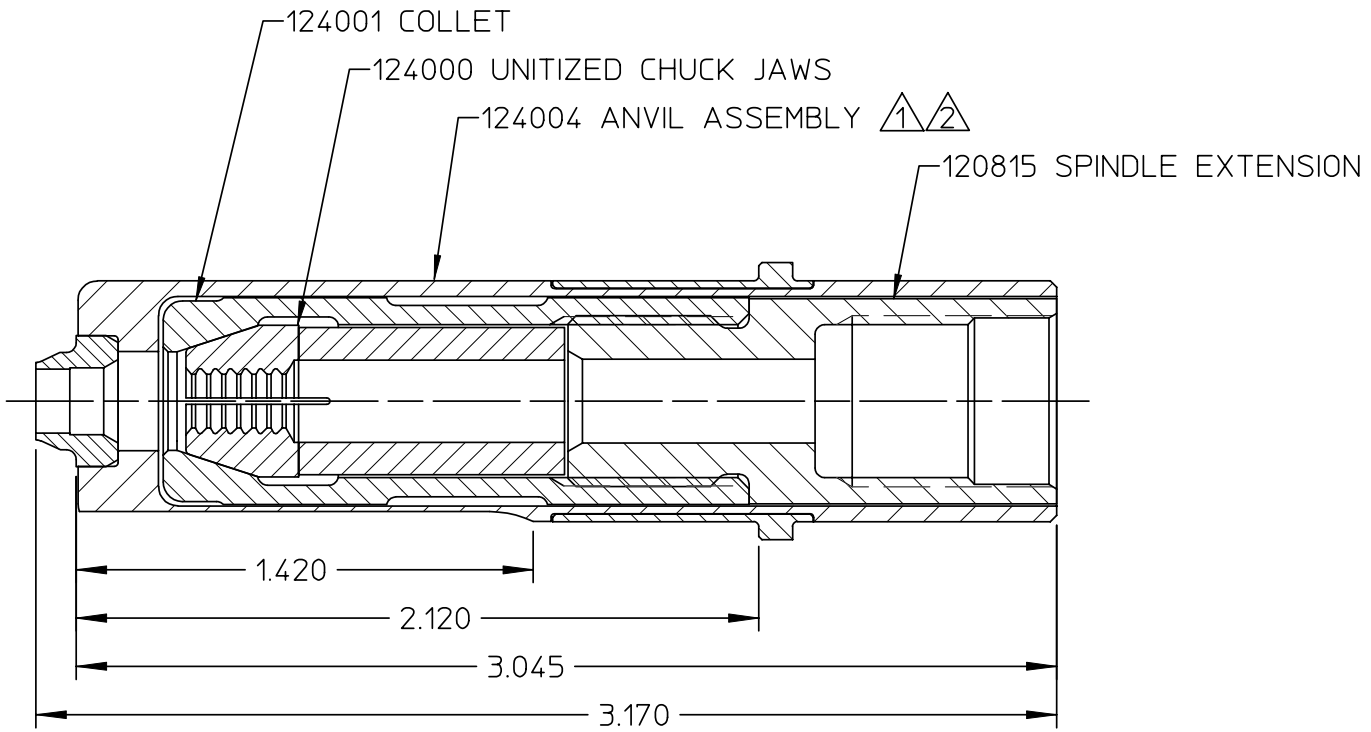

Part Number	Alcoa Fastening Systems Commercial Products 1 Corporate Drive, Kingston, NY 12401	
99-2713	NOSE TYPE: NON-SELF-RELEASING	
	FASTENER TYPE: -08 BB	
	TOOL(S): 202, 212, 352, 2400, 2480	
	Notes:	Product Revision: A
	US Patent:	Date: 06/17/03

NOTES:

1. ANVIL ASSEMBLY 124004 CONSISTS OF: ANVIL HOLDER ASSEMBLY 124003 AND ANVIL INSERT 119377.

2. ANVIL HOLDER ASSEMBLY 124003 CONSISTS OF: ANVIL HOLDER 124002 AND RETAINER 120738.