Huck Fasteners
From Cordant Technologies

NOSE ASSEMBLY DATA SHEET

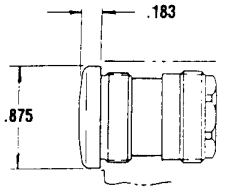

.183 in. = 5mm
.875 in. = 22mm

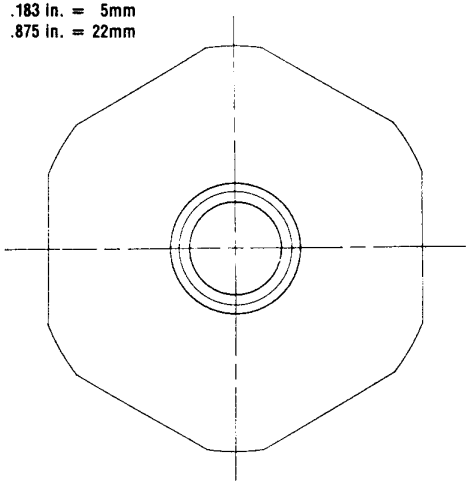

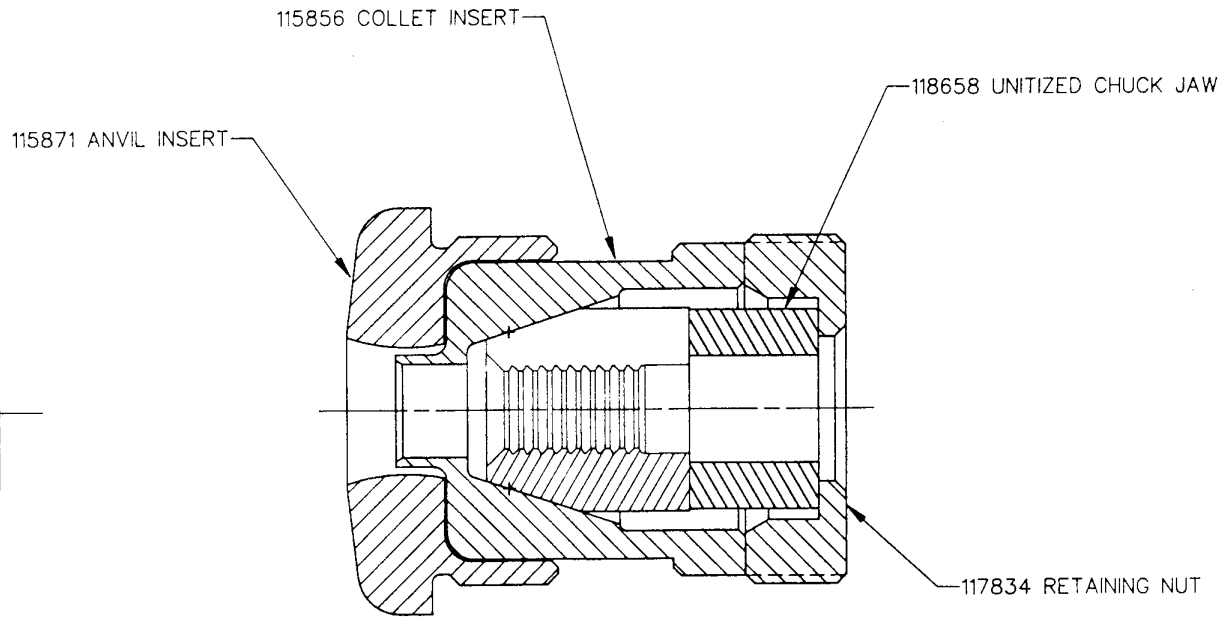

©Huck International, Inc. 1995
©Registered Trademark of Huck International, Inc., Irvine, CA
™Trademark of Huck International, Inc., Irvine, CA

99-1508

NOSE ASSEMBLY

Huck International, Inc.
Installation System Division
1 Corporate Drive - Kingston, NY 12401

TYPE: Non Self-Releasing
FOR: HUCKBOLT (GP) -06
TOOL: 209; A209

OTHER

ISSUED: 11-89
REVISED:

NOTES:

1 DEFLECTOR KIT 118744 AVAILABLE FOR THIS NOSE ASSEMBLY.

U.S. Patent No. 4,347,728

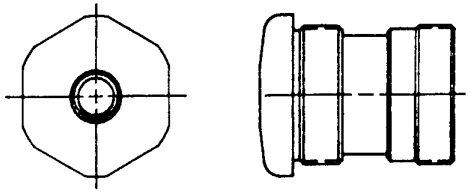

ACTUAL SIZE

Nose Assembly Maintenance

1. Prepare tool per manual.

WARNING
Before maintenance or adjustments:
POWERIG Hydraulic Unit must be disconnected from electrical or air supply. If not disconnected, severe personal injury and/or damage may result.

Disconnect POWERIG Hydraulic Unit's power source. Connect tool's hoses and controls to unit. Reconnect power source. Depress trigger for 30 seconds piston stops completely forward. Disconnect controls and **RETURN** hose - - ***tool piston must remain completely forward.***

CAUTION: In severe conditions, VIBRATITE can be used on all threads to prevent loosening and damage. Carefully follow container's directions.

2. **Disaassembly/assembly *as applicable*** :
Remove 209 shield and deflector use 5/64 hex key (#632 bttn. hd.) for shield; 3/32 hex key (#832 bttn. hd.) for deflector. Use 5\16 hex key or 5/8 socket wrench to remove rear retaining nut
disassemble components of nose assembly for inspection and maintenance.
Anvil:
Pressedin anvil is pressed out with drift and arbor press - - press new anvil in squarely to prevent cracking. Screw anvil into tool - - tighten wrenchtight.
Collet:
Slide assembled collet through 209 and into anvil. Use either 5/16 hex key or 5/8 socket wrench to install retaining nut - tighten wrenchtight.
Tool:
Reinstall 209 deflector and shield use 5/64 and 3/32 hex keys.

WARNING
Operating tool and/or installing fasteners without tool's shield and guard in place may cause serious personal injury.

3. **Checking nose assembly**:
See **WARNING - -** connect controls and **RETURN** hose. Reconnect hydraulic unit to power source. Install fasteners in test plate of correct thickness with proper sized holes - - inspect installed fasteners

Notes:
1. ***To increase jaw life*** : Disassemble nose assembly periodically; clean and inspect components use a pick to clean jaw grooves. **Caution:** Wash parts in **mineral spirits or isopropyl alcohol** only. Dry Oring and urethane jaw assemblies **immediately** after cleaning as prolonged contact with solvent causes swelling dry other parts.

2. *Spare parts - - as applicable :* Driving anvils; anvil inserts; jaws; springs; retaining rings.

3. *Service items - - as applicable :* Adjustable wrench, 503044; NYLON brush, 105805 (05 & 06); NYLON brush, 105806 (08); 5/64 hex key, 502444; 3/32 hex key, 502293; 5/16 hex key, 502446; VIBRATITE, 505125.