PRODUCT NUMBER

98414–XXX–XX–XXXLF

PLATING

S = 0.38µm GOLD/GXT ON CONTACT AREA 3.81µm TIN LEAD ON TAIL

G = 0.76µm GOLD/GXT ON CONTACT AREA 3.81µm TIN LEAD ON TAIL

F = GOLD FASH ON CONTACT AREA 3.81µm TIN LEAD ON TAIL

WHEN REQUIRED, ADD SUFFIX LETTER "LF" INDICATES THE PRODUCT IS RoHS COMPATIBLE, SEE NOTE 8

POLARIZATION, SEE NOTE 7

PACKAGING, SEE NOTE 5

TOTAL NB OF POSITIONS, 04 TO 50 POS

COLOR OPTION NOTE 1

PIN STYLE	POST LENGTH	TAIL LENGTH
06	4.00	2.50
08	4.00	3.10
10	4.00	3.70

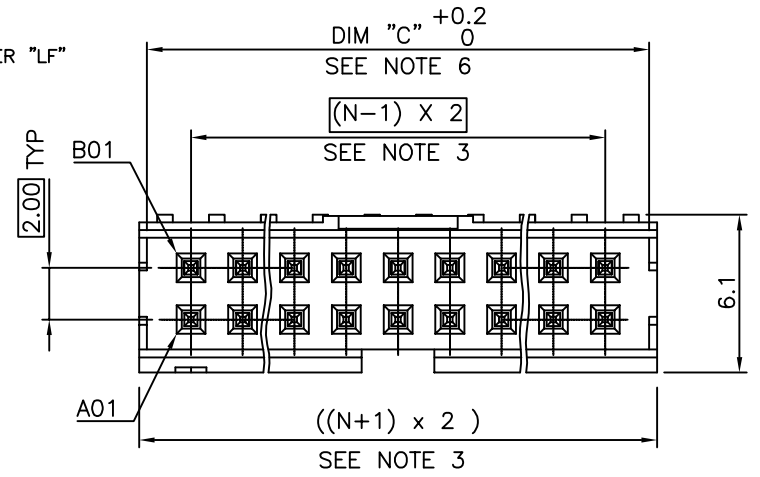

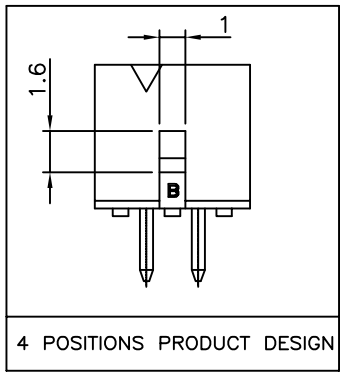

NOTES:

1. MATERIAL HOUSING: HIGH TEMP. THERMOPLASTIC UL–94V0
   – = STANDARD COLOR CREAM
   B = OPTIONAL COLOR BLACK
2. MATERIAL TERMINAL: COPPER ALLOY
3. TO DETERMINE DIMENSIONS:
   N = NUMBER OF POSITIONS PER ROW
4. 7N MIN. PIN RETENTION IN EITHER DIRECTION.
5. PACKAGING:
   = PLASTIC BOX
   – = PLASTIC BOX WHEN POLARISATION FEATURE APPLICABLE
   U = TUBE AVAILABLE FROM 06 TO 50 POS
6. DIM "C" = (N x 2) + 1.4
   EXAMPLE: N = 7
   DIM "C" = (7 x 2) + 1.4 = 15.4 mm
7. FOR POLARIZATION, SPECIFIED PIN
   EXAMPLE : A03 = ROW A, POSITION 03 TO OMIT PIN
   OMIT FROM PRODUCT NUMBER IF THIS FEATURE IS NOT APPLICABLE.
8. RoHS COMPATIBLE PRODUCT SPECIFICATIONS
   a – PLATING:
   – "LF" MEANS THE PRODUCT IS LEAD–FREE, 2µm MINIMUM MATTE TIN OVER 1.27µm MINIMUM NICKEL UNDERPLATE.
   b – MANUFACTURING PROCESS COMPATIBILITY
   – THE HOUSING WILL WITHSTAND EXPOSURE TO 260°C ±5°C SOLDER BATH TEMPERATURE FOR 5 SECONDS IN A WAVE SOLDER APPLICATION WITH A 1.6mm MIN THICK CIRCUIT BOARD.
   c – LABELLING:
   – MEETS PACKAGING SPECS AS PER GS–14–920
   d – THIS PRODUCT MEETS EUROPEAN DIRECTIVES AND OTHER COUNTRY REGULATIONS AS DISCRIBED IN GS–22–008.

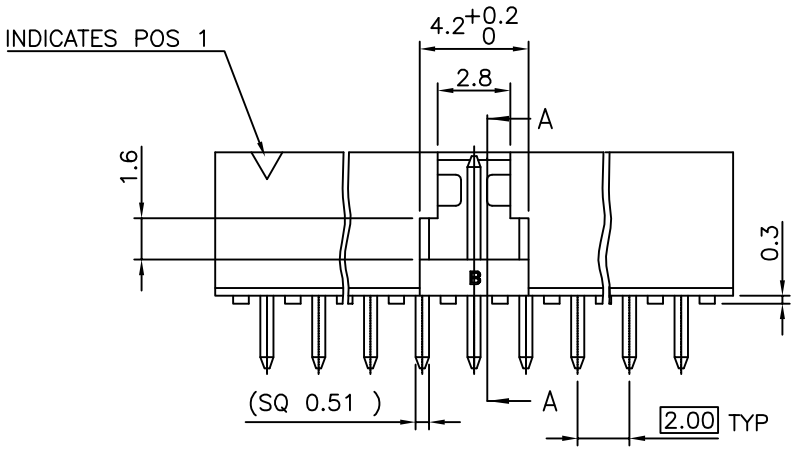

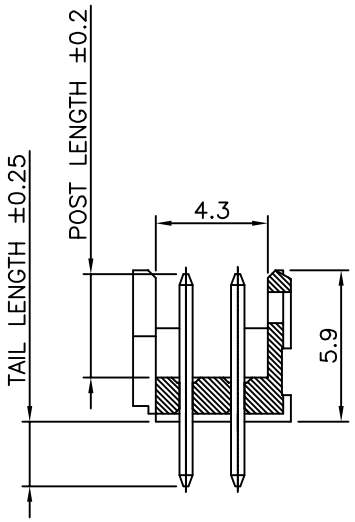

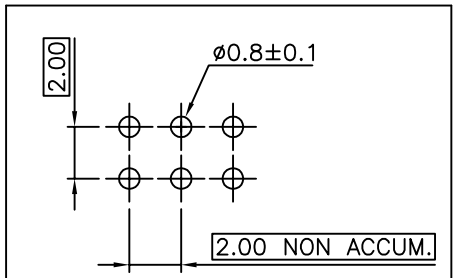

ltr	ecn no	dr	date
P	F10–0215	JCO	10.09.16
J	F05–0278	LMU	05.10.19
K	F06–0210	LMU	06.07.05
L	F08–0113	LMU	08.01.17
M	F08–0145	ELA	15.04.08
N	F09–0211	JCO	09.11.03

mat'l. code: SEE NOTES

surface: ISO 1302

tolerance: ISO 406 ISO 1101

tolerances unless otherwise specified: angles; linear X.X ±0.3, X.XX ±0.13, X.XXX ±0.05

projection

mm

scale 1:1

dr	L.MULIN	04.09.27
engr	J.COMPAGNON	04.09.27
chr		
appd	JM.C	04.09.27

sheet	revision	P	A
index	sheet	1	2

product family: MINITEK

title: SHR HEADER 2.00 VERTICAL TMT

dwg no: 98414

sheet 1 of 2

size: A3

type: CUSTOMER Drawing

PDM: Rev:P STATUS: Released Printed: Oct 07, 2010

form: A3

FCIconnect.com
Copyright FCI

2x3 POS AND 2x4 POS CONFIGURATION
NO LATCHING AVAILABLE FOR 2x2 POS

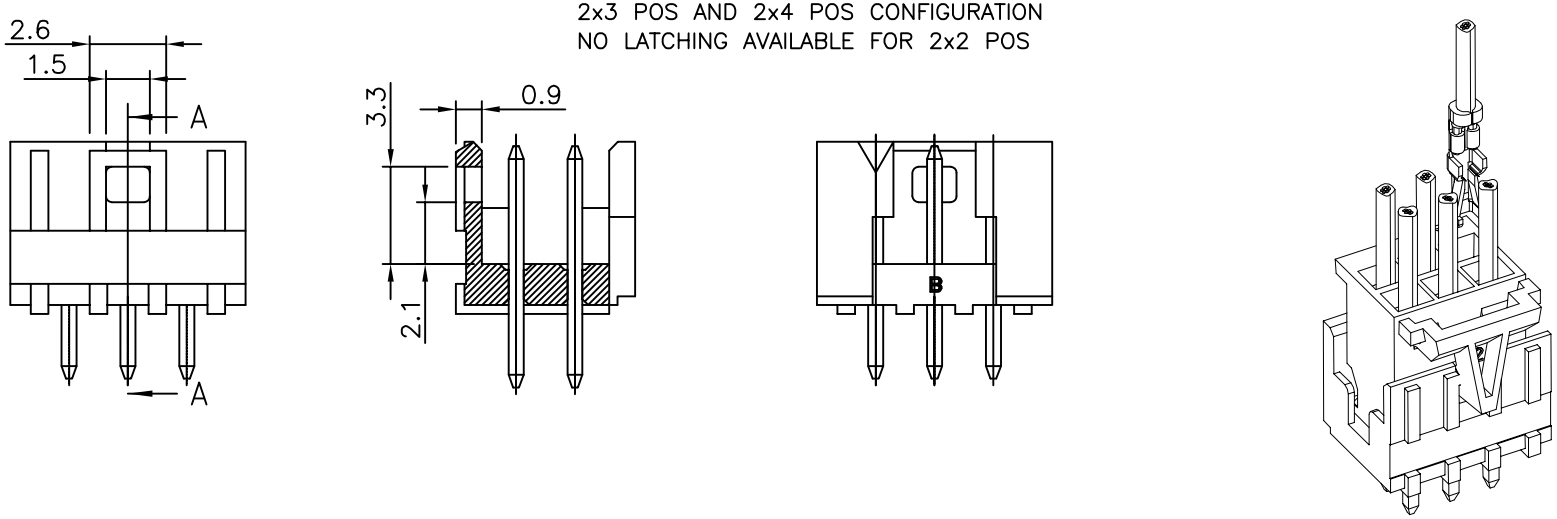

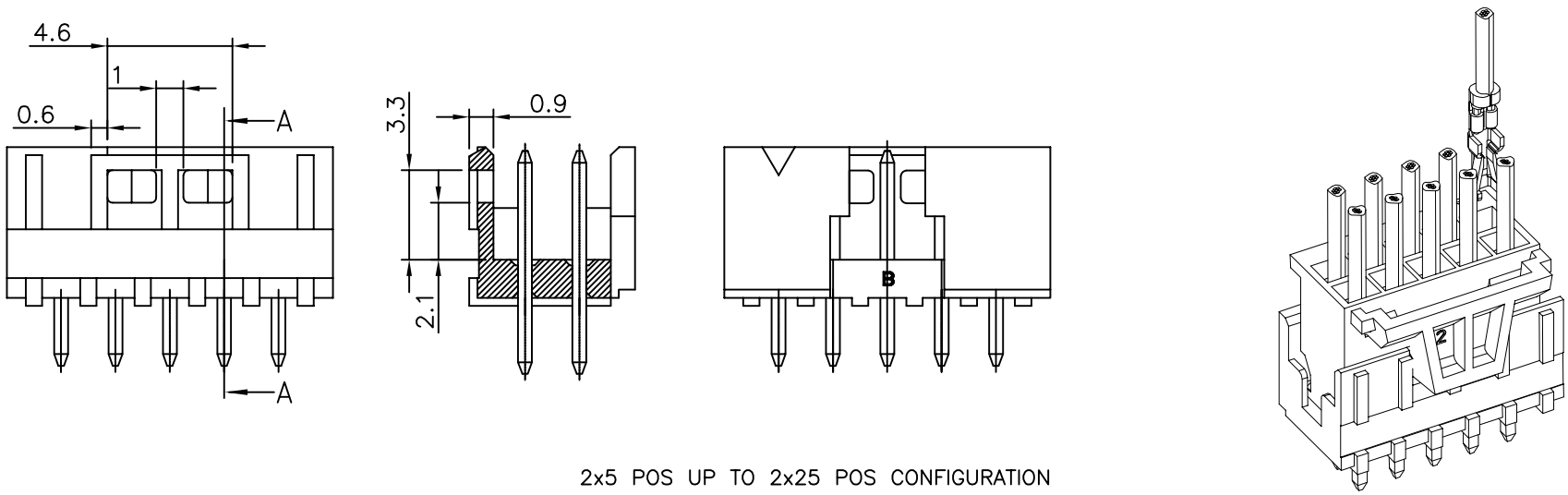

2x5 POS UP TO 2x25 POS CONFIGURATION

LATCHING FEATURES WHEN USED IN COMBINATION
WITH ACTIVE LATCH HOUSING 10073599

mat'l. code SEE NOTES				surface ISO 1302	tolerance ISO 406 ISO 1101	projection	product family MINITEK
ltr	ecn no	dr	date	tolerances unless otherwise specified			title SHR HEADER 2.00 VERTICAL TMT
A	F08-0113	LMU	08.01.17	angles	linear X.X ±0.3 / X.XX ±0.13 / X.XXX ±0.05	mm	
						scale 1:1	
				dr	L.MULIN	07.11.06	dwg no 98414 sheet 2 of – size A3
				engr	J.COMPAGNON	07.11.06	
				chr			
				appd	JM.C	07.11.06	type CUSTOMER Drawing
sheet index	revision sheet						

FCIconnect.com
Copyright FCI
form: A3

PDM: Rev:P STATUS: Released Printed: Oct 07, 2010