THIS DRAWING IS UNPUBLISHED. RELEASED FOR PUBLICATION 20
© COPYRIGHT 20 BY TYCO ELECTRONICS CORPORATION, ALL RIGHTS RESERVED.

SET UP GAUGE	LOC	DIST
2119599-1	A	66

REVISIONS

P	LTR	DESCRIPTION	DATE	DWN	APVD
	C	ECR-15-018772	30DEC2015	MR	GB

ATLANTIC VERSION TERMINATOR INTERFACE ADAPTER

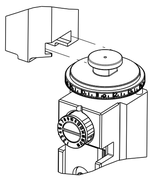

PART NUMBER	REVISION	DESCRIPTION	FEED TYPE
2151432-1	C	FINE CRIMP HEIGHT ADJUST	MECHANICAL
2151432-2	C	FINE CRIMP HEIGHT ADJUST	PNEUMATIC
2151432-5	C	FINE CRIMP HEIGHT ADJUST	SERVO LATCH PLATE 4
2151432-6	C	NON-CRIMP HEIGHT ADJUST	SERVO 4 LATCH PLATE 12
2151432-7	C	FINE CRIMP HEIGHT ADJUST	NONE
7-2151432-7	A	CRIMP TOOLING KIT	-

APPLICATOR STYLE CONVERSION CHART

CONVERT TO	PART NUMBERS REQUIRED					
PNEUMATIC FEED	2119950-1	1338683-1	5-18022-5	2119641-1	2119799-1	2063440-1
SERVO LATCH PLATE	2119951-1	-	8-2151432-5	1901094-3	-	2168400-6 (QUANTITY 2)
SMART APPLICATOR	2161326-1	-	8-2151432-4	-	-	-
MECHANICAL FEED	2119949-1	1338683-1	5-18022-5	2119653-1	-	-
SERVO LATCH PLATE	2119951-1	-	8-2151432-5	1901094-3	-	2168400-6 (QUANTITY 2)
SMART APPLICATOR	2161326-1	-	8-2151432-4	-	-	-
MECHANICAL FEED	2119949-1	1338683-1	5-18022-5	2119653-1	-	-
PNEUMATIC FEED	2119950-1	1338683-1	5-18022-5	2119641-1	2119799-1	2063440-1
-	-	-	-	-	-	-
-	-	-	-	-	-	-
-	-	-	-	-	-	-
-	-	-	-	-	-	-

APPLICATOR DATA

CRIMP	SIZE	TYPE
WIRE	1.40 mm [.055]	F
INSUL	1.70 mm [.067]	O

APPLICATOR INSTRUCTIONS 408-10389

TERMINAL DATA: MOLEX TERMINAL — MOLEX CRIMP SPECIFICATION

TERMINAL NAME: TERMINAL, FEMALE BOX

WIRE STRIP LENGTH	INSULATION DIAMETER RANGE
3.17-3.56 mm [.125-.140 IN]	∅1.40-1.63 mm [.055-.064 IN]

TERMINAL APPLICATION SPECIFICATION			
	PS-70058	-	-
	-	-	-

TERMINALS APPLIED

TE TERMINAL	MOLEX TERMINAL	TE TERMINAL	MOLEX TERMINAL
286981-1	16-02-0088	286981-8	16-02-0131
286981-2	16-02-0087	286981-9	70058-0086
286981-3	16-02-0086	1-286981-0	70058-0087
286981-4	16-02-1124	1-286981-1	70058-0088
286981-5	16-02-1111	1-286981-2	70058-4086
286981-6	16-02-1110	1-286981-3	70058-5001
286981-7	16-02-0103		

WIRE SIZE	CRIMP HEIGHT mm [INCH]	CRIMP HEIGHT 9 REFERENCE SETTING
22 AWG OR 0.35mm2	0.865+/-0.025 [.034+/-.001]	8.1
24 AWG OR 0.20mm2	0.785+/-0.025 [.0309+/-.0010]	8.9

1 RECOMMENDED SPARE PARTS

2 GREASE BEARING SURFACES LIGHTLY

3. LUBRICATE DAILY PER THE APPLICATOR INSTRUCTION SHEET SUPPLIED WITH THE APPLICATOR.

4 APPLICATOR SPECIFIC DATA TO BE ENTERED INTO BLANK MEMORY CHIP AT ASSEMBLY. SEE BELOW FOR PART NUMBER:
MECHANICAL FEED WITH "SMART APPLICATOR" CONVERSION: 8-2151432-4
PNEUMATIC FEED WITH "SMART APPLICATOR" CONVERSION: 8-2151432-4
SERVO FEED WITH "FINE CRIMP HEIGHT ADJUST": 8-2151432-5
SERVO FEED WITH "NON-CRIMP HEIGHT ADJUST": 8-2151432-6

5. ADJUSTMENT OF THE STRIPPER MAY BE REQUIRED WHEN MOVING THE APPLICATOR BETWEEN BENCH AND LEADMAKER APPLICATIONS.

6 APPLY PART NUMBER 1-23419-5 LOCTITE TO THREADS OF ITEM 62.
APPLY PART NUMBER 2-23419-6 LOCTITE TO THREADS OF ITEM 242.
FOR -6 ONLY APPLY PART NUMBER 1-23419-5 LOCTITE TO THREADS OF ITEM 37.

7 GREASE THREADS, GROOVE AND O-RING ON ITEMS 35 & 252.

8 MAGNET, ITEM 166 MUST BE ORIENTED CORRECTLY IN ORDER TO PROPERLY ACTUATE THE COUNTER.

9 CRIMP HEIGHT REFERENCE SETTING WAS THE SETTING USED WHEN THE APPLICATOR WAS QUALIFIED AT THE FACTORY. ADJUSTMENT MAY BE NECESSARY WHEN RUNNING APPLICATOR IN THE FIELD.

10 SPARE FEED CAM STORAGE LOCATION REFER TO INSTRUCTION SHEET FOR ADDITIONAL INFORMATION.

11 TO CONVERT THE APPLICATOR TO A NON-CARRIER CUTTING STYLE, REMOVE ITEM 13 AND ATTACH TO THE LOCATION ON THE BACK SIDE OF THE HOUSING. REFER TO INSTRUCTION SHEET FOR ADDITIONAL INFORMATION.

12 WHEN ASSEMBLING -6 NON-CRIMP HEIGHT ADJUST APPLICATOR USE SHIM PACK 2119957-2 TO ALIGN APPLICATOR'S MAXIMUM WIRE CRIMP HEIGHT AT NORMAL TERMINATOR SHUT HEIGHT

13 CUT TO LENGTH AT ASSEMBLY.

*WARNING
ON INSTALLATION, SET WIRE DISC, ITEM 40 TO LARGEST WIRE SIZE SETTING. USE OF SETTINGS BELOW MINIMUM REQUIRED CRIMP HEIGHT SETTING WILL CAUSE DAMAGE TO CRIMP TOOLING.

-77	-7	-6	-5	-2	-1	PART NO	DESCRIPTION	ITEM NO
-	1	1	1	1	1	2119791-6	DEPRESSOR, WIRE	286
-	-	1	-	-	-	2119957-2	APPLICATOR SHIM PACK	260
-	1	-	1	1	1	8-21084-0	O-RING, .676 ID, .070 DIA. MAT.	252
-	-	-	-	1	-	2119640-1	PUSH ROD, AIR FEED	250
-	-	-	-	1	-	2079988-1	BUSHING, LCH5-12, MISUMI	249
-	-	-	-	1	-	2119641-1	FEED CAM, AIR FEED	248
-	1	-	1	1	1	2119798-1	DETENT PIN	247
-	1	-	1	1	1	1-22279-3	SPRING, COMPRESSION	246
-	-	1	-	-	-	2119758-1	RAM, AMP STYLE, SIDE FEED, NON-ADJ.	245
-	1	1	1	1	1	2119082-9	CAM, SNAIL, INSULATION ADJUSTMENT	244
-	1	1	1	1	1	2079764-1	WASHER, WAVE SPRING, CREST-TO-CREST	243
-	1	1	1	1	1	2119083-1	RETAINER, INSULATION DIAL	242
-	2	2	2	2	2	7-18023-7	SCR, SKT HD CAP M3 X 4.0	241
-	-	2	2	-	-	2168400-6	SHCS, LOW HEAD, RoHS, M5 X 16	240
-77	-7	-6	-5	-2	-1	PART NO	DESCRIPTION	ITEM NO

-77	-7	-6	-5	-2	-1	PART NO	DESCRIPTION	ITEM NO
-	-	-	-	1	1	2119580-1	MECHANICAL FEED ASSEMBLY	239
-	-	-	-	1	-	2063440-1	AIR FEED MODULE	238
-	1	1	1	1	1	1-356885-5	STOP, SHEAR	237
-	-	1	1	-	-	2119740-2	TAG,IDENTIFICATION	213
-	-	1	1	-	-	1901094-3	SPACER, FEEDER	198
-	-	-	-	2	-	21045-3	RING, RETAIN, EXTERN, 3/16 CRESCENT	172
-	1	1	1	1	1	994969-1	MAGNET, RARE EARTH HIGH ENERGY	166
-	REF	REF	REF	REF	REF	994970-2	COUNTER, MAGNETIC	164
-	-	-	-	1	-	240638-1	SPRING, FEED FINGER	163
-	-	-	-	1	-	3-23627-7	PIN, RETAIN, GRVD, 3/16 X .854	137
-	-	-	-	1	-	2119799-1	HOLDER,FEED FINGER, AF	136
-	-	REF	REF	-	-	SEE NOTE 4	MEMORY CHIP, PROGRAMMED	135
-	-	1	1	-	-	1633743-1	SERVO FEED LATCH ASM	133
-	1	1	1	1	1	2168083-6	SCR, SKT HD CAP, RoHS, M5 X 65	124
-	2	2	2	2	2	1-18028-2	WASHER, FLAT, REG M4	119
-	1	1	1	1	1	1-22281-8	SPRING, COMPRESSION	96
-	1	1	1	1	1	980371-4	SCR, SKT HD SHLDR 5.0 DIA X 6.0	83
-	1	1	1	1	1	455888-6	SPACER, CRIMPER	82
-	1	1	1	1	1	8-240641-4	SPACER	81
-	1	1	1	1	1	2119956-1	DOCUMENTATION PACKAGE	71
-	1	1	1	1	1	2119791-5	DEPRESSOR, WIRE	70
-	1	1	1	1	1	2119943-1	WASHER, SPACER	69
-	1	-	-	1	1	2119740-1	TAG,IDENTIFICATION	67
-	2	2	2	2	2	2168078-1	SCREW, DRIVE, RH, RoHS, 2 x .188	66
-	4	4	4	4	4	2168083-1	SCR, SKT HD CAP, RoHS, M3 X 8.0	65
-	1	-	1	1	1	2119793-1	LIMITER, ADJUSTMENT BOLT	63
-	3	-	3	3	3	992763-5	SCR, SET, SOC, CONE POINT, M3 x 4.0	62
-	2	2	2	2	2	2-18032-5	SCR, SET, FLT POINT M5 X 20.0	61
-	1	1	1	1	1	2079383-4	SCR, BHSC, RoHS (M4 X 8)	60
-	-	-	-	1	1	5-18022-5	SCR, HEX HD CAP, M4 X 6.0	59
-	-	-	-	1	1	1338683-1	FEED PAWL	56
-	4	4	4	4	4	2168400-1	SHCS, LOW HEAD, RoHS, M4 X 12	54
-	2	2	2	2	2	2168083-9	SCR, SKT HD CAP, RoHS, M4 X 20	53
-	-	-	-	1	2	18023-9	SCR, SKT HD CAP M4 X 6.0	49
-	-	-	-	-	1	2119652-1	FEED CAM, PRE FEED	48
-	-	-	-	-	1	2119653-1	FEED CAM, POST FEED	47
-	1	1	1	1	1	2119656-9	APPLICATOR BASIC ASSEMBLY, SF	46
-	1	-	1	1	1	2119370-1	RAM, AMP STYLE, SIDE FEED	44
-	1	1	1	1	1	2079383-7	SCR, BHSC, RoHS (M8 X 25)	41
-	1	-	1	1	1	2119645-1	DISC, NUMBERED FA WIRE ADJUSTMENT	40
-	1	-	1	1	1	2119957-1	APPLICATOR SHIM PACK	39
-	1	1	1	1	1	2119644-1	RAM WASHER, PRECISION	38
-	1	1	1	1	1	2119085-1	FA HEAD, ATLANTIC STYLE	37
-	1	-	1	1	1	2119092-1	BOLT, ADJUSTMENT	35
-	1	1	1	1	1	2161328-1	HEX HEAD, FLANGED, M5 x 8mm LONG	32
-	1	1	1	1	1	1901091-1	PLATE, REAR STRIP GUIDE	29
-	1	1	1	1	1	455888-1	SPACER, CRIMPER	28
-	2	2	2	2	2	1-22284-0	SPRING, COMPRESSION	27
-	1	1	1	1	1	356835-1	LEVER, DRAG RELEASE	26
-	1	1	1	1	1	240792-1	DRAG, TERMINAL	25
-	1	1	1	1	1	189124-7	GUIDE, FRONT STRIP	24
-	1	1	1	1	1	690438-1	FRONT STRIP GUIDE	23
-	1	1	1	1	1	2168083-2	SCR, SKT HD CAP, RoHS, M4 X 8.0	21
-	1	1	1	1	1	1-18028-2	WASHER, FLAT, REG M4	20
-	1	1	1	1	1	2119533-1	STRIPPER, SIDE FEED	19
-	1	1	1	1	1	2-690518-4	HOLD DOWN, TERMINAL	18
-	1	1	1	1	1	690463-1	FLOATING SHEAR, REAR	17
-	2	2	2	2	2	1-2168083-1	SCR, SKT HD CAP, RoHS, M3 X 6	16
-	1	1	1	1	1	1-690464-4	SHEAR PLATE, REAR	15
-	1	1	1	1	1	2119862-1	SHEAR HOLDER, REAR	14
-	2	2	2	2	2	2119806-1	INSERT, SHEAR	13
-	2	2	2	2	2	3-22280-3	SPRING, COMPRESSION	12
-	1	1	1	1	1	1-356885-4	STOP, SHEAR	11
-	1	1	1	1	1	2119805-1	SHEAR HOLDER, FRONT	10
-	1	1	1	1	1	1803095-3	FLOATING SHEAR, FRONT	9
1	1	1	1	1	1	3-1633621-8	ANVIL, COMBINATION	8
-	1	1	1	1	1	240641-4	SPACER	7
-	1	1	1	1	1	690468-2	DEPRESSOR SHEAR, REAR	6
-	1	1	1	1	1	1-2119757-1	DEPRESSOR, SHEAR	5
-	1	1	1	1	1	238011-6	BLOCK, CRIMPER SPACER	4
1	1	1	1	1	1	2-1803019-0	CRIMPER, INSULATION O	3
-	-	-	-	-	-	-	-	2
1	1	1	1	1	1	5-456402-4	CRIMPER, WIRE PREMIUM	1
-77	-7	-6	-5	-2	-1	PART NO	DESCRIPTION	ITEM NO

ATLANTIC VERSION
Shown on sheets 1 of 4 & 2 of 4
(Pacific version shown on sheets 3 of 4 & 4 of 4)

THIS DRAWING IS A CONTROLLED DOCUMENT FOR TYCO ELECTRONICS CORPORATION. IT IS SUBJECT TO CHANGE AND THE CONTROLLING ENGINEERING ORGANIZATION SHOULD BE CONTACTED FOR THE LATEST REVISION.

DIMENSIONS: mm

TOLERANCES UNLESS OTHERWISE SPECIFIED:
0 PLC ±-
1 PLC ±-
2 PLC ±-
3 PLC ±-
4 PLC ±-
ANGLES ±-

MATERIAL - -
FINISH - -

DWN	Y.YIN	22MAY2012
CHK	G.BAILEY	22MAY2012
APVD	S.XI	22MAY2012

PRODUCT SPEC -
APPLICATION SPEC -
WEIGHT -

TE Connectivity
Harrisburg, PA 17105-3608

NAME Ocean Side Feed Applicator -

SIZE	CAGE CODE	DRAWING NO	RESTRICTED TO
A1	00779	C-2151432	-

Customer Accessible Production Drawing — SCALE 1:2 — SHEET 1 OF 4 — REV C

SHEETS 3 & 4 ARE NOT REQUIRED FOR ATLANTIC VERSION

THIS DRAWING IS UNPUBLISHED. RELEASED FOR PUBLICATION 20
© COPYRIGHT 20 BY TYCO ELECTRONICS CORPORATION. ALL RIGHTS RESERVED.

LOC	DIST
A	66

REVISIONS

P	LTR	DESCRIPTION	DATE	DWN	APVD
	-	SEE SHEET 1	-	-	-

FEED TYPE MECHANICAL

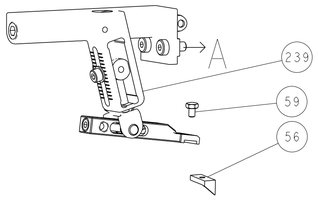

PNEUMATIC

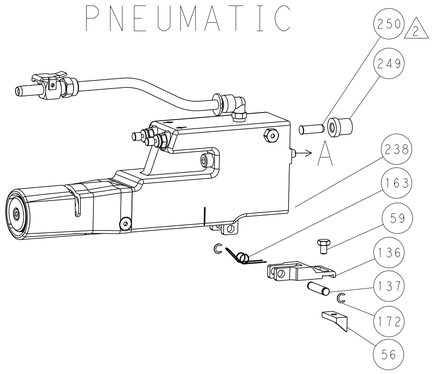

SERVO LATCH PLATE

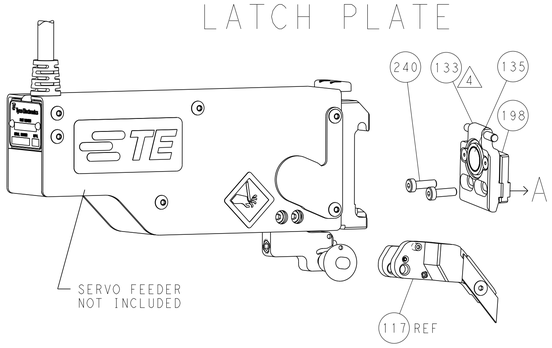

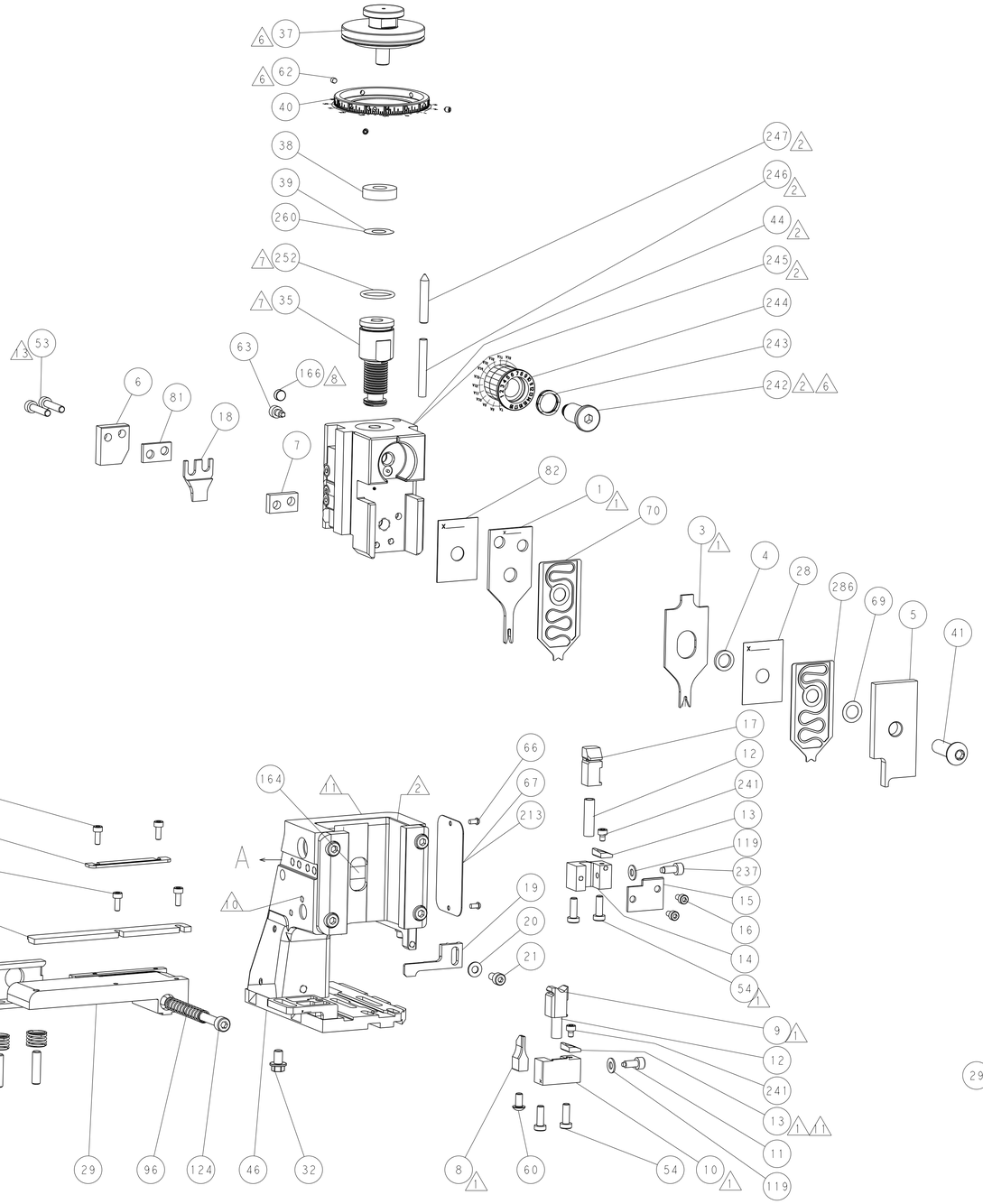

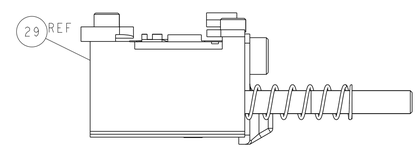

FEED TRACK POSITION
GUIDE BY INSULATION BARREL

CAM POSITIONS

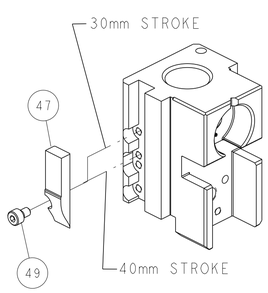

MECHANICAL
POST FEED

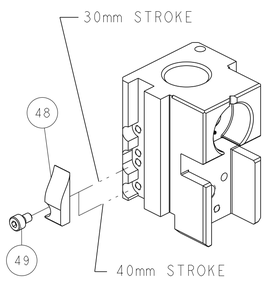

MECHANICAL
PRE FEED

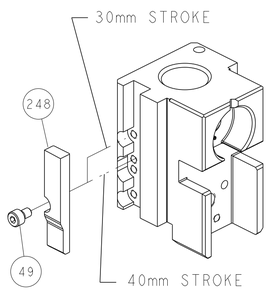

AIR FEED

ATLANTIC VERSION

Shown on sheets 1 of 4 & 2 of 4
(Pacific version shown on sheets 3 of 4 & 4 of 4)

THIS DRAWING IS A CONTROLLED DOCUMENT FOR TYCO ELECTRONICS CORPORATION. IT IS SUBJECT TO CHANGE AND THE CONTROLLING ENGINEERING ORGANIZATION SHOULD BE CONTACTED FOR THE LATEST REVISION.

DIMENSIONS: mm

TOLERANCES UNLESS OTHERWISE SPECIFIED:
0 PLC ±-
1 PLC ±-
2 PLC ±-
3 PLC ±-
4 PLC ±-
ANGLES ±-

MATERIAL - -
FINISH - -

DWN	Y.YIN	22MAY2012
CHK	G.BAILEY	22MAY2012
APVD	S.XI	22MAY2012
PRODUCT SPEC	-	
APPLICATION SPEC	-	
WEIGHT	-	

TE Connectivity
Harrisburg, PA 17105-3608

NAME: Ocean Side Feed Applicator -

SIZE	CAGE CODE	DRAWING NO	RESTRICTED TO
A1	00779	C-2151432	-

Customer Accessible Production Drawing | SCALE 1:2 | SHEET 2 OF 4 | REV C

AMP 4805 REV 31MAR2000

SHEETS 3 & 4 ARE NOT REQUIRED FOR ATLANTIC VERSION

THIS DRAWING IS UNPUBLISHED. RELEASED FOR PUBLICATION 20
© COPYRIGHT 20 BY TYCO ELECTRONICS CORPORATION. ALL RIGHTS RESERVED.

SET UP GAUGE	LOC	DIST
2119599-1	A	66

REVISIONS

P	LTR	DESCRIPTION	DATE	DWN	APVD
	-	SEE SHEET 1	-	-	-

PACIFIC VERSION TERMINATOR INTERFACE ADAPTER	PART NUMBER	REVISION	DESCRIPTION	FEED TYPE
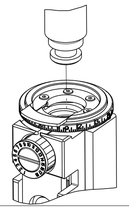	2-2151432-1	C	FINE CRIMP HEIGHT ADJUST	MECHANICAL
	2-2151432-2	C	FINE CRIMP HEIGHT ADJUST	PNEUMATIC
	2-2151432-5	C	FINE CRIMP HEIGHT ADJUST	SERVO LATCH PLATE 4
	2-2151432-7	C	FINE CRIMP HEIGHT ADJUST	NONE
	7-2151432-7	A	CRIMP TOOLING KIT	-

APPLICATOR STYLE CONVERSION CHART

CONVERT TO	PART NUMBERS REQUIRED					
PNEUMATIC FEED	2119950-1	1338683-1	5-18022-5	2119641-2	2119799-1	2063440-1
SERVO LATCH PLATE	2119951-1	-	8-2151432-5	1901094-3	-	2168400-6 (QUANTITY 2)
SMART APPLICATOR	2161326-1	-	8-2151432-4	-	-	-
MECHANICAL FEED	2119949-1	1338683-1	5-18022-5	2119653-2	-	-
SERVO LATCH PLATE	2119951-1	-	8-2151432-5	1901094-3	-	2168400-6 (QUANTITY 2)
SMART APPLICATOR	2161326-1	-	8-2151432-4	-	-	-
MECHANICAL FEED	2119949-1	1338683-1	5-18022-5	2119653-2	-	-
PNEUMATIC FEED	2119950-1	1338683-1	5-18022-5	2119641-2	2119799-1	2063440-1
-	-	-	-	-	-	-
-	-	-	-	-	-	-

APPLICATOR DATA

CRIMP	SIZE	TYPE
WIRE	1.40 mm [.055]	F
INSUL	1.70 mm [.067]	O

APPLICATOR INSTRUCTIONS 408-10389

TERMINAL DATA: MOLEX TERMINAL — MOLEX CRIMP SPECIFICATION

TERMINAL NAME: TERMINAL, FEMALE BOX

WIRE STRIP LENGTH	INSULATION DIAMETER RANGE
3.17-3.56 mm [.125-.140 IN]	∅1.40-1.63 mm [.055-.064 IN]

TERMINAL APPLICATION SPECIFICATION			
	PS-70058	-	-
	-	-	-

TERMINALS APPLIED

TE TERMINAL	MOLEX TERMINAL	TE TERMINAL	MOLEX TERMINAL
286981-1	16-02-0088	286981-8	16-02-0131
286981-2	16-02-0087	286981-9	70058-0086
286981-3	16-02-0086	1-286981-0	70058-0087
286981-4	16-02-1124	1-286981-1	70058-0088
286981-5	16-02-1111	1-286981-2	70058-4086
286981-6	16-02-1110	1-286981-3	70058-5001
286981-7	16-02-0103		

WIRE SIZE	CRIMP HEIGHT mm [INCH]	CRIMP HEIGHT 9 REFERENCE SETTING
22 AWG OR 0.35mm2	0.865+/-0.025 [.034+/-.001]	8.1
24 AWG OR 0.20mm2	0.785+/-0.025 [.0309+/-.0010]	8.9

1 RECOMMENDED SPARE PARTS

2 GREASE BEARING SURFACES LIGHTLY

3. LUBRICATE DAILY PER THE APPLICATOR INSTRUCTION SHEET SUPPLIED WITH THE APPLICATOR.

4 APPLICATOR SPECIFIC DATA TO BE ENTERED INTO BLANK MEMORY CHIP AT ASSEMBLY. SEE BELOW FOR PART NUMBER:
MECHANICAL FEED WITH "SMART APPLICATOR" CONVERSION: 8-2151432-4
PNEUMATIC FEED WITH "SMART APPLICATOR" CONVERSION: 8-2151432-4
SERVO FEED WITH "FINE CRIMP HEIGHT ADJUST": 8-2151432-5

5. ADJUSTMENT OF THE STRIPPER MAY BE REQUIRED WHEN MOVING THE APPLICATOR BETWEEN BENCH AND LEADMAKER APPLICATIONS.

6 APPLY PART NUMBER 1-23419-5 LOCTITE TO THREADS OF ITEM 62. APPLY PART NUMBER 2-23419-6 LOCTITE TO THREADS OF ITEM 242.

7 GREASE THREADS, GROOVE AND O-RING ON ITEMS 139 & 152.

8 MAGNET MUST BE ORIENTED CORRECTLY IN ORDER TO PROPERLY ACTUATE THE COUNTER.

9 CRIMP HEIGHT REFERENCE SETTING WAS THE SETTING USED WHEN THE APPLICATOR WAS QUALIFIED AT THE FACTORY. ADJUSTMENT MAY BE NECESSARY WHEN RUNNING APPLICATOR IN THE FIELD.

10 SPARE FEED CAM STORAGE LOCATION REFER TO INSTRUCTION SHEET FOR ADDITIONAL INFORMATION.

11 TO CONVERT THE APPLICATOR TO A NON-CARRIER CUTTING STYLE, REMOVE ITEM 13 AND ATTACH TO THE LOCATION ON BACK SIDE OF THE HOUSING. REFER TO INSTRUCTION SHEET FOR ADDITIONAL INFORMATION.

12 CUT TO LENGTH AT ASSEMBLY.

*WARNING
ON INSTALLATION, SET WIRE DISC, ITEM 40 TO LARGEST WIRE SIZE SETTING. USE OF SETTINGS BELOW MINIMUM REQUIRED CRIMP HEIGHT SETTING WILL CAUSE DAMAGE TO CRIMP TOOLING.

	-77	-27	-25	-22	-21	PART NO	DESCRIPTION	ITEM NO
	-	1	1	1	1	2119791-6	DEPRESSOR, WIRE	286
	-	1	1	1	1	2119782-1	FINE ADJUST HEAD ASM, PACIFIC STYLE	251
	-	-	-	1	-	2119640-1	PUSH ROD, AIR FEED	250
	-	-	-	1	-	2079988-1	BUSHING, LCH5-12, MISUMI	249
	-	1	1	1	1	1-22279-3	SPRING, COMPRESSION	246
	-	1	1	1	1	2119082-9	CAM, SNAIL, INSULATION ADJUSTMENT	244
	-	1	1	1	1	2079764-1	WASHER, WAVE SPRING, CREST-TO-CREST	243
6	-	1	1	1	1	2119083-1	RETAINER, INSULATION DIAL	242
	-	2	2	2	2	7-18023-7	SCR, SKT HD CAP M3 X 4.0	241
	-	-	2	-	-	2168400-6	SHCS, LOW HEAD, RoHS, M5 X 16	240
	-	-	-	-	1	2119580-1	MECHANICAL FEED ASSEMBLY	239
	-	-	-	1	-	2063440-1	AIR FEED MODULE	238

PACIFIC VERSION

Shown on sheets 3 of 4 & 4 of 4
(Atlantic version shown on sheets 1 of 4 & 2 of 4)

	-77	-27	-25	-22	-21	PART NO	DESCRIPTION	ITEM NO
	-	1	1	1	1	1-356885-5	STOP, SHEAR	237
	-	-	1	-	-	2119740-2	TAG,IDENTIFICATION	213
	-	-	1	-	-	1901094-3	SPACER, FEEDER	198
	-	-	-	2	-	21045-3	RING, RETAIN, EXTERN, 3/16 CRESCENT	172
8	-	1	1	1	1	994969-1	MAGNET, RARE EARTH HIGH ENERGY	166
	-	REF	REF	REF	REF	994970-2	COUNTER, MAGNETIC	164
	-	-	-	1	-	240638-1	SPRING, FEED FINGER	163
7	-	1	1	1	1	8-21084-1	O-RING, .801 ID, .070 DIA. MAT.	152
	-	-	-	1	-	2119641-2	FEED CAM, AIR FEED	151
	-	1	1	1	1	2119798-2	DETENT PIN	145
	-	1	1	1	1	2079383-8	SCR, BHSC, RoHS (M4 X 16)	144
	-	4	4	4	4	2168400-5	SHCS, LOW HEAD, RoHS, M4 X 20	143
	-	-	-	-	1	2119653-2	FEED CAM, POST FEED	142
	-	1	1	1	1	1-2119656-0	APPLICATOR BASIC ASSEMBLY, SF	141
	-	1	1	1	1	2119650-1	RAM, ASIAN STYLE, SIDE FEED	140
7	-	1	1	1	1	2119092-2	BOLT, ADJUSTMENT	139
	-	-	-	1	-	3-23627-7	PIN, RETAIN, GRVD, 3/16 X .854	137
	-	-	-	1	-	2119799-1	HOLDER,FEED FINGER, AF	136
	-	-	REF	-	-	SEE NOTE 4	MEMORY CHIP, PROGRAMMED	135
	-	-	1	-	-	1633743-1	SERVO FEED LATCH ASM	133
	-	1	1	1	1	2168083-6	SCR, SKT HD CAP, RoHS, M5 X 65	124
	-	2	2	2	2	1-18028-2	WASHER, FLAT, REG M4	119
	-	1	1	1	1	1-22281-8	SPRING, COMPRESSION	96
	-	1	1	1	1	980371-4	SCR, SKT HD SHLDR 5.0 DIA X 6.0	83
	-	1	1	1	1	455888-6	SPACER, CRIMPER	82
	-	1	1	1	1	8-240641-4	SPACER	81
	-	1	1	1	1	2119956-1	DOCUMENTATION PACKAGE	71
	-	1	1	1	1	2119791-5	DEPRESSOR, WIRE	70
	-	1	1	1	1	2119943-1	WASHER, SPACER	69
	-	1	-	1	1	2119740-1	TAG,IDENTIFICATION	67
	-	2	2	2	2	2168078-1	SCREW, DRIVE, RH, RoHS, 2 x .188	66
	-	4	4	4	4	2168083-1	SCR, SKT HD CAP, RoHS, M3 X 8.0	65
	-	1	1	1	1	2119793-1	LIMITER, ADJUSTMENT BOLT	63
6	-	3	3	3	3	992763-5	SCR, SET, SOC, CONE POINT, M3 x 4.0	62
	-	2	2	2	2	2-18032-5	SCR, SET, FLT POINT M5 X 20.0	61
	-	-	-	1	1	5-18022-5	SCR, HEX HD CAP, M4 X 6.0	59
	-	-	-	1	1	1338683-1	FEED PAWL	56
12	-	2	2	2	2	2168083-9	SCR, SKT HD CAP, RoHS, M4 X 20	53
	-	-	-	1	2	18023-9	SCR, SKT HD CAP M4 X 6.0	49
	-	-	-	-	1	2119652-1	FEED CAM, PRE FEED	48
	-	1	1	1	1	2079383-7	SCR, BHSC, RoHS (M8 X 25)	41
	-	1	1	1	1	2119645-1	DISC, NUMBERED FA WIRE ADJUSTMENT	40
	-	1	1	1	1	2119957-1	APPLICATOR SHIM PACK	39
	-	1	1	1	1	2119644-1	RAM WASHER, PRECISION	38
	-	1	1	1	1	2161328-1	HEX HEAD, FLANGED, M5 x 8mm LONG	32
	-	1	1	1	1	1901091-1	PLATE, REAR STRIP GUIDE	29
	-	1	1	1	1	455888-1	SPACER, CRIMPER	28
	-	2	2	2	2	1-22284-0	SPRING, COMPRESSION	27
	-	1	1	1	1	356835-1	LEVER, DRAG RELEASE	26
	-	1	1	1	1	240792-1	DRAG, TERMINAL	25
	-	1	1	1	1	189124-7	GUIDE, FRONT STRIP	24
	-	1	1	1	1	690438-1	FRONT STRIP GUIDE	23
	-	1	1	1	1	2168083-2	SCR, SKT HD CAP, RoHS, M4 X 8.0	21
	-	1	1	1	1	1-18028-2	WASHER, FLAT, REG M4	20
	-	1	1	1	1	2119533-1	STRIPPER, SIDE FEED	19
	-	1	1	1	1	2-690518-4	HOLD DOWN, TERMINAL	18
	-	1	1	1	1	690463-1	FLOATING SHEAR, REAR	17
	-	2	2	2	2	1-2168083-1	SCR, SKT HD CAP, RoHS, M3 X 6	16
	-	1	1	1	1	1-690464-4	SHEAR PLATE, REAR	15
	-	1	1	1	1	2119862-1	SHEAR HOLDER, REAR	14
11	-	2	2	2	2	2119806-1	INSERT, SHEAR	13
	-	2	2	2	2	3-22280-3	SPRING, COMPRESSION	12
	-	1	1	1	1	1-356885-4	STOP, SHEAR	11
1	-	1	1	1	1	2119805-1	SHEAR HOLDER, FRONT	10
1	-	1	1	1	1	1803095-3	FLOATING SHEAR, FRONT	9
1	1	1	1	1	1	3-1633621-8	ANVIL, COMBINATION	8
	-	1	1	1	1	240641-4	SPACER	7
	-	1	1	1	1	690468-2	DEPRESSOR SHEAR, REAR	6
	-	1	1	1	1	1-2119757-1	DEPRESSOR, SHEAR	5
	-	1	1	1	1	238011-6	BLOCK, CRIMPER SPACER	4
1	1	1	1	1	1	2-1803019-0	CRIMPER, INSULATION O	3
	-	-	-	-	-	-	-	2
1	1	1	1	1	1	5-456402-4	CRIMPER, WIRE PREMIUM	1

THIS DRAWING IS A CONTROLLED DOCUMENT FOR TYCO ELECTRONICS CORPORATION. IT IS SUBJECT TO CHANGE AND THE CONTROLLING DESIGNING ORGANIZATION SHOULD BE CONTACTED FOR THE LATEST REVISION.

DIMENSIONS: mm

TOLERANCES UNLESS OTHERWISE SPECIFIED:
0 PLC ±-
1 PLC ±-
2 PLC ±-
3 PLC ±-
4 PLC ±-
ANGLES ±-

MATERIAL - -
FINISH - -

DWN	Y. YIN	22MAY2012
CHK	G. BAILEY	22MAY2012
APVD	S. XI	22MAY2012

PRODUCT SPEC -
APPLICATION SPEC -
WEIGHT -

TE Connectivity
Harrisburg, PA 17105-3608

NAME: Ocean Side Feed Applicator -

SIZE	CAGE CODE	DRAWING NO	RESTRICTED TO
A1	00779	C-2151432	-

Customer Accessible Production Drawing — SCALE 1:2 — SHEET 3 OF 4 — REV C

SHEETS 1 & 2 ARE NOT REQUIRED FOR PACIFIC VERSION

THIS DRAWING IS UNPUBLISHED. RELEASED FOR PUBLICATION 20

© COPYRIGHT 20 BY TYCO ELECTRONICS CORPORATION. ALL RIGHTS RESERVED.

LOC	DIST	REVISIONS				
A	66	LTR	DESCRIPTION	DATE	DWN	APVD
		-	SEE SHEET 1	-	-	-

PACIFIC VERSION
Shown on sheets 3 of 4 & 4 of 4
(Atlantic version shown on sheets 1 of 4 & 2 of 4)

THIS DRAWING IS A CONTROLLED DOCUMENT FOR TYCO ELECTRONICS CORPORATION IT IS SUBJECT TO CHANGE AND THE CONTROLLING ENGINEERING ORGANIZATION SHOULD BE CONTACTED FOR THE LATEST REVISION.

DIMENSIONS:	mm
TOLERANCES UNLESS OTHERWISE SPECIFIED:	0 PLC ±-; 1 PLC ±-; 2 PLC ±-; 3 PLC ±-; 4 PLC ±-; ANGLES ±-
MATERIAL	- / -
FINISH	- / -
DWN	Y.YIN 22MAY2012
CHK	G.BAILEY 22MAY2012
APVD	S.XI 22MAY2012
PRODUCT SPEC	-
APPLICATION SPEC	-
WEIGHT	-
	TE Connectivity, Harrisburg, PA 17105-3608
NAME	Ocean Side Feed Applicator -
SIZE	A1
CAGE CODE	00779
DRAWING NO	C-2151432
RESTRICTED TO	-
SCALE	1:2
SHEET	4 OF 4
REV	C

Customer Accessible Production Drawing

SHEETS 1 & 2 ARE NOT REQUIRED FOR PACIFIC VERSION

AMP 4805 REV 31MAR2000