970-010 LOW PROFILE JAM NUT RECEPTACLES



970-010 receptacles have a shorter profile than standard jam nut receptacles. This reduced protrusion behind the mounting panel results from removing the accessory threads, moving the mounting flange and replacing the grommet wire seal with a thinner wire separator. Series 970 PowerTrip™ extreme environment receptacle connectors are intended for high current applications where size 8 AWG to size 1/0 AWG wires are used. Contacts snap into connector through rear wire separator and can be removed with a plastic tool. These connectors feature high current LouverBand contacts. Coupling threads are triple-start ACME type. EMI protected with ground spring and splined backshell interface. Standard contacts are silver plated high conductivity copper alloy, or choose gold-plated contacts for improved corrosion protection. Contacts are packaged with connector. Red stripe indicates full mating condition

970-010 connectors have a low profile wire separator instead of a thick watertight rear grommet. These connectors are splashproof but are not rated for water immersion or altitude immersion.

HOW TO ORDER

SERIES	SHELL MATL AND FINISH	SHELL SIZE - INSERT ARRANGEMENT						CONTACT TYPE AND PLATING	KEY POSITION
		Contact Arr.	Contact Size and Qty #16	#12	#8	#4	#1/0		
970-010 Jam Nut Receptacle, for Rear Panel Mounting, Low Profile	**ME** Aluminum, Electroless Nickel Finish	18-2			2			**P1** Pin Contacts, Silver Plating*	**-1** Position 1
	MT Aluminum, Nickel-PTFE Finish	18-4		2	2			**P2** Pin Contacts, Gold Plating	**-2** Position 2
	NF Aluminum, Olive Drab Cadmium	20-3			3			**S1** Socket Contacts, Silver Plating*	**-3** Position 3
	ZR Aluminum, Black Zinc-Nickel Finish	20-4			4			**S2** Socket Contacts, Gold Plating	**-4** Position 4
	Z1 Passivated Stainless Steel	20-5		2	3			**A** Pin Connector, without Contacts	**-5** Position 5
		20-7	4		3			**B** Socket Connector, without Contacts	**-6** Position 6
		24-2				2			
		24-3				3			
		24-5			5				
		24-6		4		2			
		24-A6		3		3			
		28-4				4			
		28-8		1	7				
		28-9	5			4			
		28-15	15						
		32-2					2		
		32-3					3		
		32-4				2	2		
		32-5				5			
		32-6		3			3		
		32-20	1	19					
		36-4					4		
		36-16	3		13				
		40-5					5		
		40-21			21				

* Size 12 and 16 contacts are gold-plated. Size 8, 4 and 1/0 are silver plated.

Sample Part Number				
970-010	MT	24-5	P1	-1

D

© 2013 Glenair, Inc.

970-010 LOW PROFILE JAM NUT RECEPTACLE

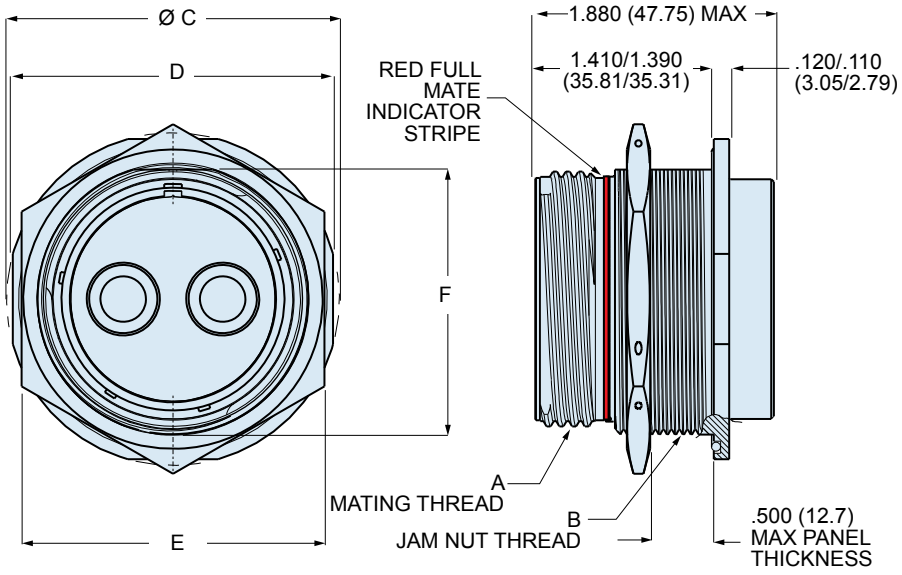

DIMENSIONS										
Shell Size	A Mating Thd.	B Jam Nut Thd.	ø C		D		E		F	
			In.	mm.	In.	mm.	In.	mm.	In.	mm.
18	1.125-.1P-.3L-TS-2A	1.250-18 UNEF-2A	1.733	44.02	1.639	41.63	1.438	36.53	1.212	30.78
20	1.250-.1P-.3L-TS-2A	1.4375-18 UNEF-2A	1.921	48.79	1.827	46.41	1.625	41.28	1.399	35.53
24	1.500-.1P-.3L-TS-2A	1.625-18 UNEF-2A	2.108	53.54	2.014	51.16	1.822	46.28	1.587	40.31
28	1.750-.1P-.3L-TS-2A	1.9375-16 UN-2A	2.425	61.60	2.327	59.11	2.188	55.58	1.899	48.23
32	2.000-.1P-.3L-TS-2A	2.125-16 UN-2A	2.607	66.24	2.513	63.83	2.375	60.33	2.084	52.93
36	2.250-.1P-.3L-TS-2A	2.375-16 UN-2A	2.857	72.57	2.763	70.18	2.625	66.68	2.323	59.00
40	2.500-.1P-.3L-TS-2A	2.625-16 UN-2A	3.107	78.92	3.013	76.53	2.875	73.03	2.548	64.72

KEY POSITIONS				
Position	A°	B°	C°	D°
1	80	142	196	293
2	135	170	200	310
3	49	169	200	244
4	66	140	200	257
5	62	145	180	280
6	79	153	197	272

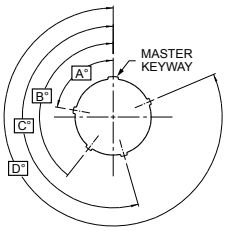

PANEL CUTOUT				
	Diameter		Flat	
Shell Size	In.	mm.	In.	mm.
	-.000 +.010	-.00 +0.25	-.000 +.010	-.00 +0.25
18	1.265	32.13	1.217	30.91
20	1.452	36.88	1.409	35.79
24	1.640	41.66	1.596	40.54
28	1.952	49.58	1.910	48.51
32	2.140	54.36	2.092	53.14
36	2.390	60.71	2.342	59.49
40	2.640	67.06	2.557	64.95

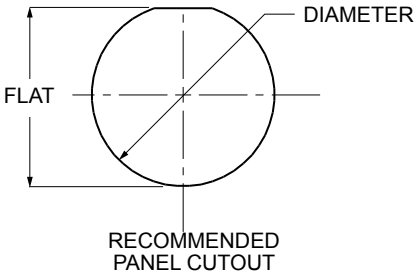

© 2013 Glenair, Inc.

GLENAIR, INC. • 1211 AIR WAY • GLENDALE, CA 91201-2497 • 818-247-6000 • FAX 818-500-9912
www.glenair.com E-Mail: sales@glenair.com