ECHOTEL®
Model 961/962

Installation and Operating Manual



Model 961



Model 962

Ultrasonic

Single and

Dual Point

Level Switches

Magnetrol®

Read this Manual Before Installing

This manual provides information on the Echotel® Models 961 and 962 Ultrasonic Liquid Level Switches. It is important that all instructions are read carefully and followed in sequence. Detailed instructions are included in the Installation section of this manual.

Conventions Used in this Manual

Certain conventions are used in this manual to convey specific types of information. General technical material, support data, and safety information are presented in narrative form. The following styles are used for notes, cautions, and warnings.

Notes

Notes contain information that augments or clarifies an operating step. Notes do not normally contain actions, they follow the procedural steps to which they refer.

Cautions

Cautions alert the technician to special conditions that could injure personnel, damage equipment, or reduce a component's mechanical integrity. Cautions are also used to alert the technician to unsafe practices or the need for special protective equipment or specific materials. In this manual, a caution box indicates a potentially hazardous situation which, if not avoided, may result in minor or moderate injury.

Warnings

Warnings identify potentially dangerous situations or serious hazards. In this manual, a warning indicates an imminently hazardous situation which, if not avoided, could result in serious injury or death.

Safety Messages

ECHOTEL Models 961 & 962 are designed for use in Category II, Pollution Degree 2 installations. Follow all standard industry procedures for servicing electrical and computer equipment when working with or around high voltage. Always shut off the power supply before touching any components.

Electrical components are sensitive to electrostatic discharge. To prevent equipment damage, observe safety procedures when working with electrostatic sensitive components.

This device complies with Part 15 of the FCC rules. Operation is subject to the following two conditions: (1) This device may not cause harmful interference, and (2) This device must accept any interference received, including interference that may cause undesired operation.

WARNING! Explosion hazard. Do not connect or disconnect equipment unless power has been switched off or the area is known to be non-hazardous.

Low Voltage Directive

For use in Category II installations. If equipment is used in a manner not specified by manufacturer, protection provided by equipment may be impaired.

Notice of Trademark, Copyright, and Limitations

Magnetrol®, Magnetrol® logotype and Echotel® are registered tradenames of Magnetrol International, Incorporated.®

Copyright © 2011 MAGNETROL INTERNATIONAL, INCORPORATED. All rights reserved.

Performance specifications are effective with date of issue and are subject to change without notice. MAGNETROL reserves the right to make changes to the product described in this manual at any time without notice. MAGNETROL makes no warranty with respect to the accuracy of the information in this manual.

Warranty

All MAGNETROL electronic level and flow products are warranted free of defects in materials or workmanship for one full year from the date of original factory shipment.

If returned within the warranty period; and, upon factory inspection of the control, the cause of the claim is determined to be covered under the warranty; then, MAGNETROL will repair or replace the control at no cost to the purchaser (or owner) other than transportation.

MAGNETROL shall not be liable for misapplication, labor claims, direct or consequential damage or expense arising from the installation or use of equipment. There are no other warranties expressed or implied, except special written warranties covering some MAGNETROL products.

Quality Assurance

The quality assurance system in place at MAGNETROL guarantees the highest level of quality throughout the company. MAGNETROL is committed to providing full customer satisfaction both in quality products and quality service.

The MAGNETROL quality assurance system is registered to ISO 9001 affirming its commitment to known international quality standards providing the strongest assurance of product/service quality available.

Magnetrol®

Echotel® Model 961 & 962 Ultrasonic Single and Dual Point Liquid Level Switches

Table of Contents

1.0 Introduction **4**
1.1 Principle of Operation 4
2.0 Installation **4**
2.1 Unpacking 4
2.2 ESD Handling Procedure 5
2.3 Mounting 5
2.4 Wiring 6
2.4.1 Model 961 Line-powered Wiring 6
2.4.1.1 Model 961 Remote Transducer Housing Wiring 7
2.4.2 Model 961 Loop-powered Wiring 8
2.4.2.1 Model 961 Remote Transducer Housing Wiring 8
2.4.3 Model 962 Line-powered Wiring 9
2.4.3.1 Model 962 Remote Transducer Housing Wiring 10
2.4.4 Model 962 Loop-powered Wiring 11
2.4.4.1 Model 962 Remote Transducer Housing Wiring 11
2.5 Configuration 12
2.5.1 Model 961 Line-powered Configuration 12
2.5.1.1 Time Delay Potentiometer 13
2.5.1.2 Level Test Push Button 13
2.5.1.3 Malfunction Test Push Button 13
2.5.1.4 High/Low DIP Switch 14
2.5.1.5 Independent/Joint DIP Switch 14
2.5.2 Model 961 Loop-powered Configuration 15
2.5.2.1 Time Delay Potentiometer 15
2.5.2.2 Loop Test Push Button 15
2.5.2.3 Fault Test Push Button 15
2.5.2.4 High/Low DIP Switch 16
2.5.2.5 22/3.6 DIP Switch 16
2.5.3 Model 962 Line-powered Configuration 17
2.5.3.1 Time Delay Potentiometer 17
2.5.3.2 Level Test Push Button 17
2.5.3.3 Malfunction Test Push Button 17
2.5.3.4 High/Low DIP Switch 18
2.5.3.5 PC/LC DIP Switch 18
2.5.3.6 LC and Hi/Lo DIP Switch Configuration 18
2.5.3.7 PC and Hi/Lo DIP Switch Configuration 19
2.5.4 Model 962 Loop-powered Configuration 20
2.5.4.1 Time Delay Potentiometer 20
2.5.4.2 Loop Test Push Button 20
2.5.4.3 Fault Test Push Button 20
2.5.4.4 High/Low DIP Switch 21
2.5.4.5 22/3.6 DIP Switch 21
3.0 Reference Information **22**
3.1 Electronics Specifications 22
3.1.1 Model 961/962 with Relay Output 22
3.1.2 Model 961/962 with Current Shift Output .22
3.2 Performance Specifications 22
3.3 Physical Specifications 22
3.4 Transducer Specifications 23
3.4.1 Model 9A1/9M1 Single Point 23
3.4.2 Model 9A2/9M2 Dual Point 23
3.5 Dimensional Specifications 24
3.6 Agency Approvals 26
3.6.1 Agency (FM/CSA) Drawing and Entity Parameters 27
3.7 Troubleshooting 28
3.8 Replacement Parts 30
3.9 Model Number 32
3.9.1 Model 961/962 Electronics 32
3.9.2 Model 961 Single Point Transducer 33
3.9.3 Model 962 Dual Point Transducer 34
3.9.4 Connecting Cable 35

1.0 Introduction

ECHOTEL Model 961 and 962 ultrasonic level switches utilize pulsed signal technology to detect high, low, or dual point level in a broad range of liquid media applications.

Model 961 is a single point level switch. Model 962 is a dual point switch used as a level controller or to control pumps in an auto-fill or auto-empty mode.

1.1 Principle of Operation

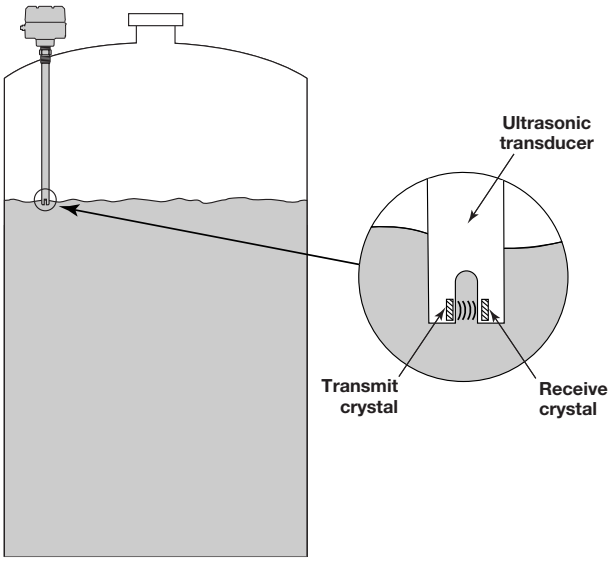

Figure 1
Ultrasonic Signal Transmission Across Transducer Gap

Model 961/962 switches utilize ultrasonic energy to detect the presence or absence of liquid in a single or dual point transducer. Ultrasonic contact level technology uses high-frequency sound waves that are easily transmitted across a transducer gap (see Figure 1) in the presence of a liquid media, but are attenuated when the gap is dry. Model 961/962 switches use an ultrasonic frequency of 2 MHz to perform this liquid level measurement in a wide variety of process media and application conditions.

The transducer uses a pair of piezoelectric crystals that are encapsulated in epoxy at the tip of the transducer. The crystals are made of a ceramic material that vibrates at a given frequency when subjected to an applied voltage. The transmit crystal converts the applied voltage from the electronics into an ultrasonic signal. When liquid is present in the gap, the receive crystal senses the ultrasonic signal from the transmit crystal and converts it back to an electrical signal. This signal is sent to the electronics to indicate the presence of liquid in the transducer gap. When there is no liquid present, the ultrasonic signal is attenuated and is not detected by the receive crystal.

2.0 Installation

2.1 Unpacking

Unpack the instrument carefully. Inspect all units for damage. Report any concealed damage to carrier within 24 hours. Check the contents of the packing slip and purchase order. Check and record the serial number for future reference when ordering parts.

_____
serial number

2.2 Electrostatic Discharge (ESD) Handling Procedure

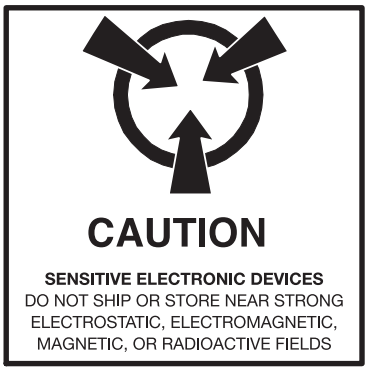

MAGNETROL electronic instruments are manufactured to the highest quality standards. These instruments use electronic components that may be damaged by static electricity present in most work environments.

The following steps are recommended to reduce the risk of component failure due to electrostatic discharge.

- Ship and store circuit boards in anti-static bags. If an anti-static bag is not available, wrap the board in aluminum foil. Do not place boards on foam packing materials.
- Use a grounding wrist strap when installing and removing circuit boards. A grounded workstation is recommended.
- Handle circuit boards only by the edges. Do not touch components or connector pins.
- Make sure that all electrical connections are completely made and none are partial or floating. Ground all equipment to a good, earth ground.

2.3 Mounting

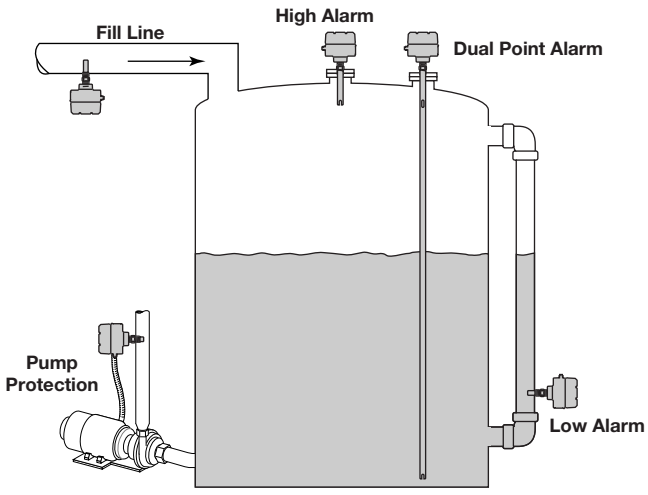

Figure 2
Typical Mounting Orientations

The Model 961 level switch may be mounted in a variety of positions as shown in Figures 2 through 5. Model 962 is always mounted vertically.

Proper orientation of the transducer gap will facilitate maximum performance in difficult applications. When the Model 961 is mounted horizontally, the transducer gap must be turned vertically to allow proper drainage of liquid out of the gap. The wrench flats on the mounting nut are aligned with the transducer gap; therefore, proper transducer mounting can be achieved by aligning the mounting nut flats in a vertical orientation. See Figure 4.

When installing a Model 961 switch in a nozzle or pipe, the transducer gap must extend into the tank at least one inch beyond the inside tank wall. Refer to Figure 5.

Screw transducer into the opening using a wrench on the transducer mounting nut flats. If flanged, bolt unit to mating flange with proper gasket. Use thread tape or suitable pipe compound on the threads. Do not over-tighten.

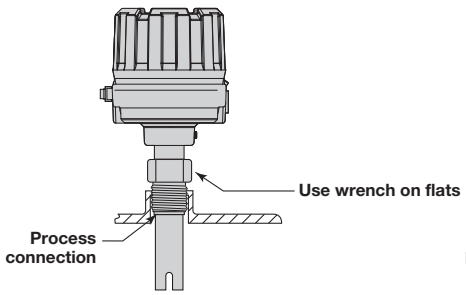

Figure 3
Vertical Mounting

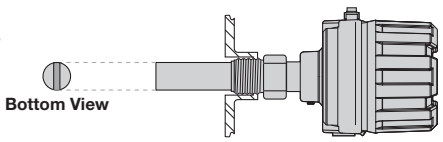

Figure 4
Horizontal Mounting

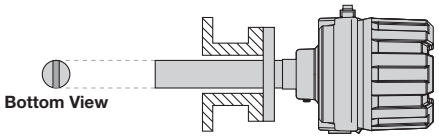

Figure 5
Nozzle Mounting

2.4 Wiring

Wiring for Model 961/962 level switches is different for all four versions. These switches are available as 4-wire, line-powered units with 5-amp relays, or as 2-wire loop-powered units with mA current shift output. Determine which version you have from the table below and proceed to the proper wiring section.

Model	Input	Output	Wiring Information
961	Line-powered	5 amp relays	***Proceed to section 2.4.1***
961	Loop-powered	Current shift	***Proceed to section 2.4.2***
962	Line-powered	5 amp relays	***Proceed to section 2.4.3***
962	Loop-powered	Current shift	***Proceed to section 2.4.4***

2.4.1 Model 961 Line-powered Wiring

Power and relay wiring connections are suitable for 12–24 AWG wire.

Caution: OBSERVE ALL APPLICABLE ELECTRICAL CODES AND PROPER WIRING PROCEDURES.

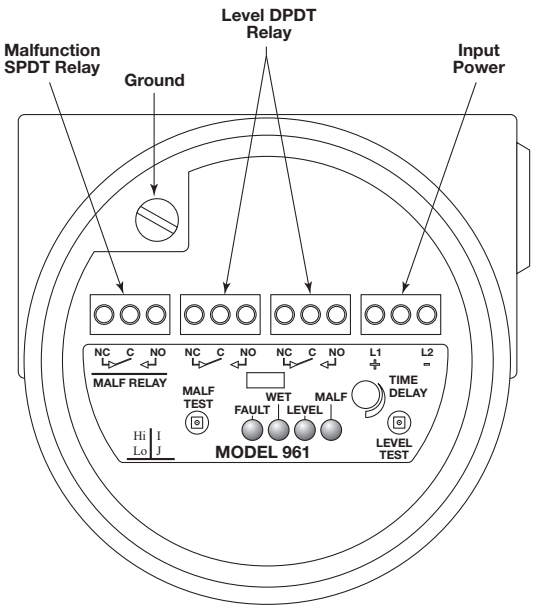

Figure 6
Model 961 Line-Powered Wiring

1. Make sure the power source is turned off.
2. Unscrew and remove housing cover.
3. Pull power supply and relay wires through the conduit connection.
4. Refer to Figure 6. Connect power leads to proper terminals. Model 961 is available for AC power (102 to 265 VAC) or for DC power (18–32 VDC)
   a. AC Power – Connect "hot" wire to terminal marked L1 and the "neutral" wire to the terminal marked L2. The green head screw should be used for grounding.
   b. DC Power – Connect wires to terminals (+) and (-) on the terminal block. The green head screw should be used for grounding.
5. Connect desired relay wiring as shown in Figure 6.
6. Prevent moisture seepage into housing by installing an approved seal drain fitting in the conduit run leading to the unit.
7. Wiring is complete. Replace housing cover.

Caution: In hazardous areas, do not power the unit until the conduit is sealed and enclosure cover is screwed down securely.

NOTE: Housing must be grounded via green head ground screw in the base of the housing.

2.4.1.1 Model 961 Remote Transducer Housing Wiring

Remote mount Model 961 units have a "1" as the 8th digit (961-XXXX-**1**XX) of the model number. The 037-3316-XXX cabling is connected at the factory on the electronics end, and secured with a cable tie. The other end of the cabling is connected by the user inside the remote transducer housing at a terminal block marked as **1 2 3 4** on a blue label. See Figure 7.

NOTE: The 037-3316-XXX cabling is connected at the factory on the electronics end. TB1 and TB2 connections are shown below in Figure 7 in the event the cable needs to be reattached.

Model 961 Line-powered Remote Mount Wiring

Transducer Housing Terminal Position	Wire	Electronics Terminal Block & Terminal Position	
1	Receive Shield	TB1	⏚
2	Receive Signal		RECV
3	Transmit Shield	TB2	⏚
4	Transmit Signal		XMIT

NOTE: The Signal wires are 30 AWG RG Type 178/U coax with the white jacket stripped off. The Shield wires are prepared with solid tinned copper 22 AWG bus wire.

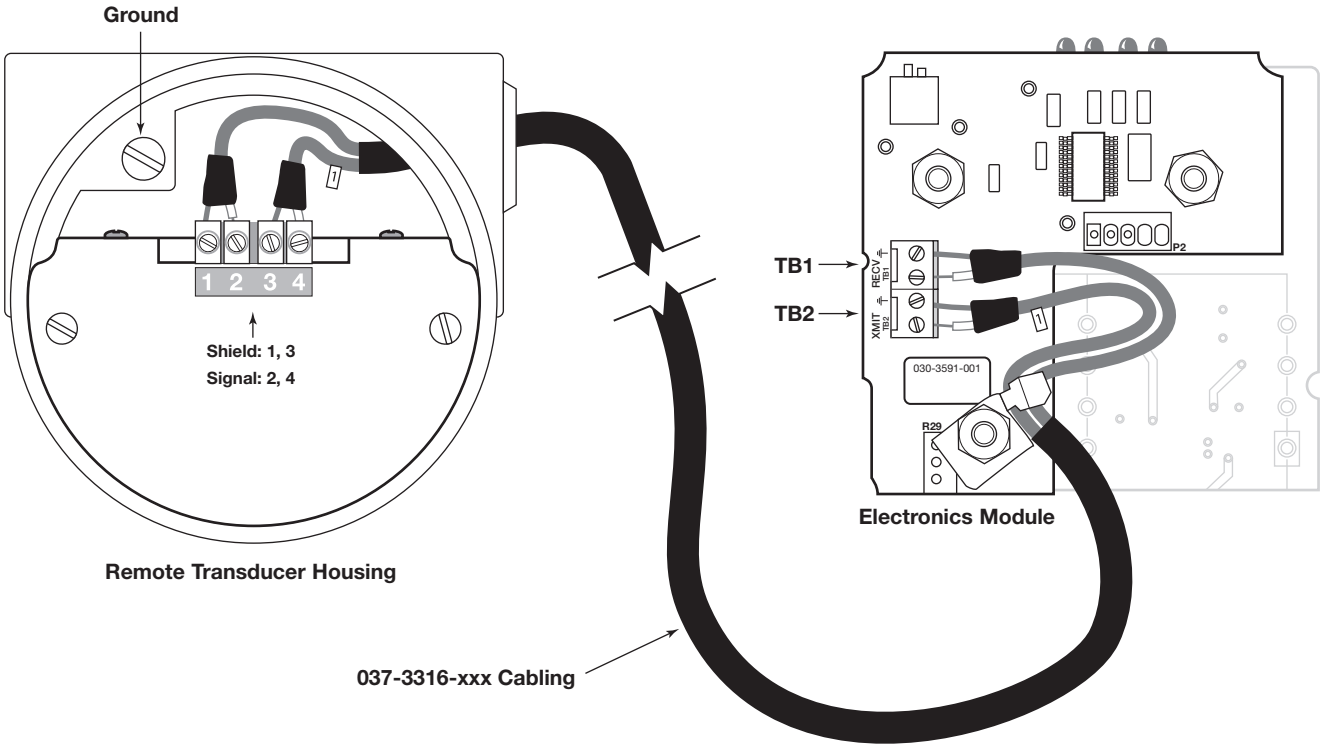

Figure 7
Model 961 Line-Powered Remote Transducer Wiring

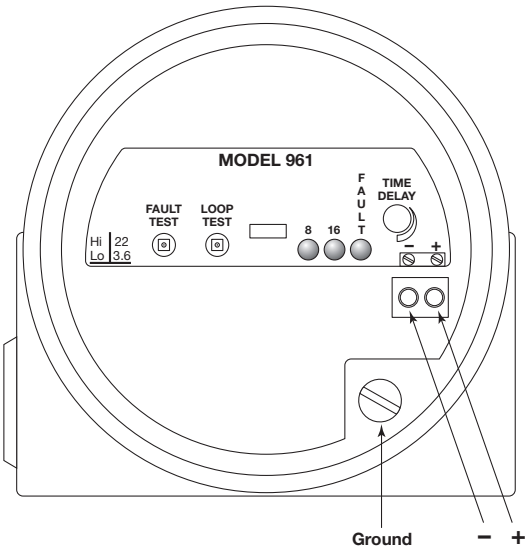

Figure 8
Model 961 Loop-Powered Wiring

2.4.2 Model 961 Loop-powered Wiring

For intrinsically safe installations, refer to the Agency Drawing in Section 3.6.1. Loop wiring connections are suitable for 12–24 AWG wire.

Caution: OBSERVE ALL APPLICABLE ELECTRICAL CODES AND PROPER WIRING PROCEDURES.

1. Make sure the power source is turned off.
2. Unscrew and remove housing cover.
3. Pull twisted pair wire through the conduit connection.
4. Refer to Figure 8. Connect wires to terminals (+) and (-) on the terminal block. Unshielded cable may be used. If shielded cable is used, attach shield to green head screw.
5. Prevent moisture seepage into housing by installing an approved seal drain fitting in the conduit run leading to the unit.
6. Wiring is complete. Replace housing cover.

Caution: In hazardous areas, do not power the unit until the conduit is sealed and enclosure cover is screwed down securely.

2.4.2.1 Model 961 Remote Transducer Housing Wiring

Remote mount Model 961 units have a "1" in the 8th digit (961-XXXX-**1**XX) of the model number. The 037-3316-XXX cabling is connected at the factory on the electronics end, and secured with a cable tie. The other end of the cabling is connected by the user inside the remote transducer housing at a terminal block marked as **1 2 3 4** on a blue label. See Figure 9.

NOTE: The 037-3316-XXX cabling is connected at the factory on the electronics end. TB2 and TB3 connections are shown in Figure 9 in the event the cable needs to be reattached.

Model 961 Loop-powered Remote Mount Wiring

Transducer Housing Terminal Position	Wire
1	Receive Shield
2	Receive Signal
3	Transmit Shield
4	Transmit Signal

Electronics Terminal Block & Terminal Position		Wire
TB3	RECV	Receive Signal
	⏚	Receive Shield
TB2	XMIT	Transmit Signal
	⏚	Transmit Shield

NOTE: The Signal wires are 30 AWG RG Type 178/U coax with the white jacket stripped off. The Shield wires are prepared with solid tinned copper 22 AWG bus wire.

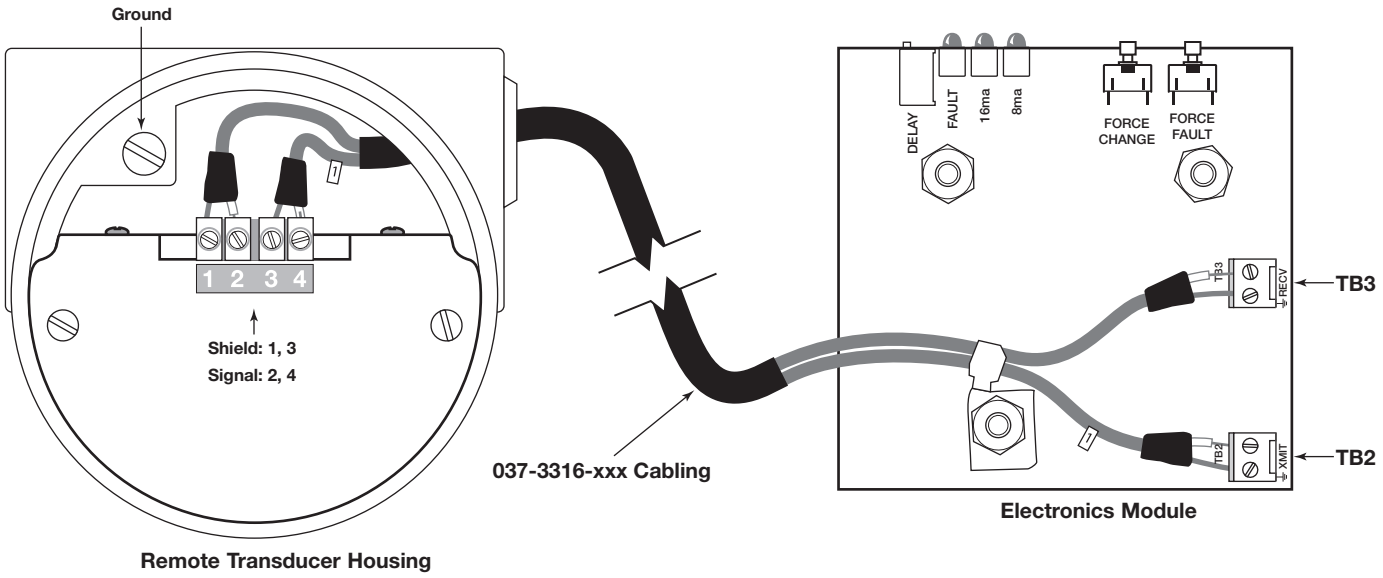

Figure 9
Model 961 Loop-Powered Remote Transducer Wiring

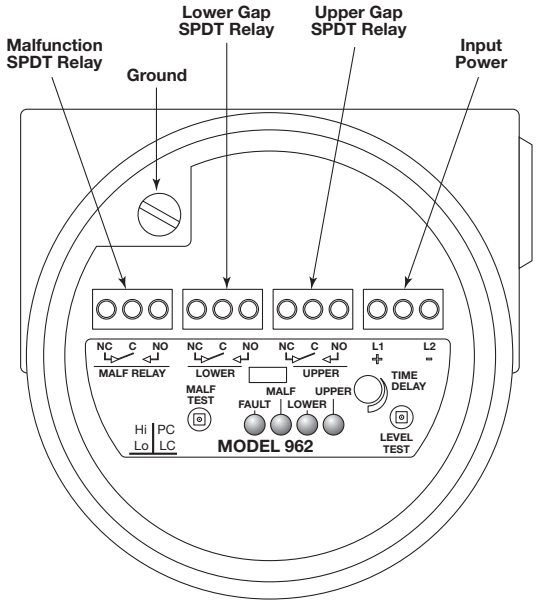

Figure 10
Model 962 Line-Powered Wiring

2.4.3 Model 962 Line-powered Wiring

Power and relay wiring connections are suitable for 12–24 AWG wire.

Caution: OBSERVE ALL APPLICABLE ELECTRICAL CODES AND PROPER WIRING PROCEDURES.

1. Make sure the power source is turned off.
2. Unscrew and remove housing cover.
3. Pull power supply and relay wires through the conduit connection.
4. Refer to Figure 10. Connect power leads to proper terminals. Model 962 is available for AC power (102 to 265 VAC) or for DC power (18–32 VDC)
   a. AC Power – Connect "hot" wire to terminal marked L1 and the "neutral" wire to the terminal marked L2. The green head screw should be used for grounding.
   b. DC Power – Connect wires to terminals (+) and (-) on the terminal block. The green head screw should be used for grounding.
5. Connect desired relay wiring as shown in Figure 10.
6. Prevent moisture seepage into housing by installing an approved seal drain fitting in the conduit run leading to the unit.
7. Wiring is complete. Replace housing cover.

Caution: In hazardous areas, do not power the unit until the conduit is sealed and enclosure cover is screwed down securely.

2.4.3.1 Model 962 Remote Transducer Housing Wiring

Remote mount Model 962 units have a "1" in the 8th digit (962-XXXX-**1**XX) of the model number. The 037-3317-XXX cabling is connected at the factory on the electronics end, and secured with a cable tie. The other end of the cabling is connected by the user inside the remote transducer housing at terminal blocks marked as **1 2 3 4 5 6 7 8** on a blue label. See Figure 11 for proper terminations.

NOTE: The 037-3317-XXX cabling is connected at the factory on the electronics end. TB1, TB2, TB3, and TB4 connections are shown below in Figure 11 in the event the cable needs to be reattached.

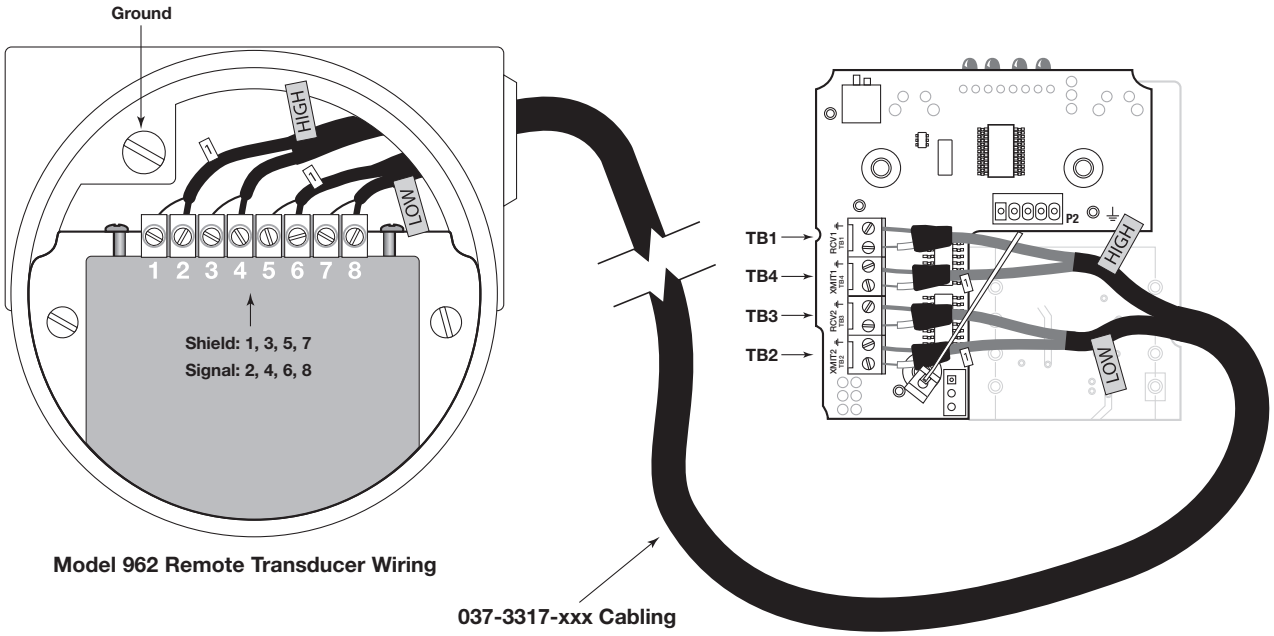

Figure 11
Model 962 Line-Powered Remote Transducer Wiring

Model 962 Line-powered Remote Mount Wiring

Transducer Gap	Cable Marker	Wire Marker	Transducer Housing TB Position	Wire	Electronics Housing TB & Terminal Position	
Upper	High	1	1	Transmit Shield	TB4	⏚
Upper	High	1	2	Transmit Signal		XMT1
Upper	High	(none)	3	Receive Shield	TB1	⏚
Upper	High	(none)	4	Receive Signal		RCV1
Lower	Low	1	5	Transmit Shield	TB2	⏚
Lower	Low	1	6	Transmit Signal		XMT2
Lower	Low	(none)	7	Receive Shield	TB3	⏚
Lower	Low	(none)	8	Receive Signal		RCV2

NOTE: The Signal wires are 30 AWG RG Type 178/U coax with the white jacket stripped off. The Shield wires are prepared with solid tinned copper 22 AWG bus wire.

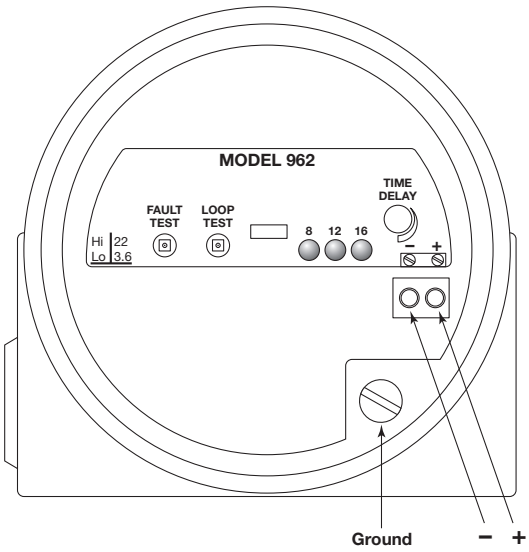

Figure 12
Model 962 Loop Power Wiring

2.4.4 Model 962 Loop-powered Wiring

For intrinsically safe installations, refer to the Agency Drawing in Section 3.6.1. Loop wiring connections are suitable for 12–24 AWG wire.

Caution: OBSERVE ALL APPLICABLE ELECTRICAL CODES AND PROPER WIRING PROCEDURES.

1. Make sure the power source is turned off.
2. Unscrew and remove housing cover.
3. Pull twisted pair wire through the conduit connection.
4. Refer to Figure 12. Connect wires to terminals (+) and (-) on the terminal block. Unshielded cable may be used. If shielded cable is used, attach shield to green head screw.
5. Prevent moisture seepage into housing by installing an approved seal drain fitting in the conduit run leading to the unit.
6. Wiring is complete. Replace housing cover.

Caution: In hazardous areas, do not power the unit until the conduit is sealed and enclosure cover is screwed down securely.

2.4.4.1 Model 962 Remote Transducer Housing Wiring

Remote mount Model 962 units have a "1" in the 8th digit (962-XXXX-**1**XX) of the model number. The 037-3317-XXX cabling is connected at the factory on the electronics end and secured with a cable tie. The other end of the cabling is connected by the user inside the remote transducer housing at terminal blocks marked as **1 2 3 4 5 6 7 8** on a blue label. See Figure 13 for proper terminations.

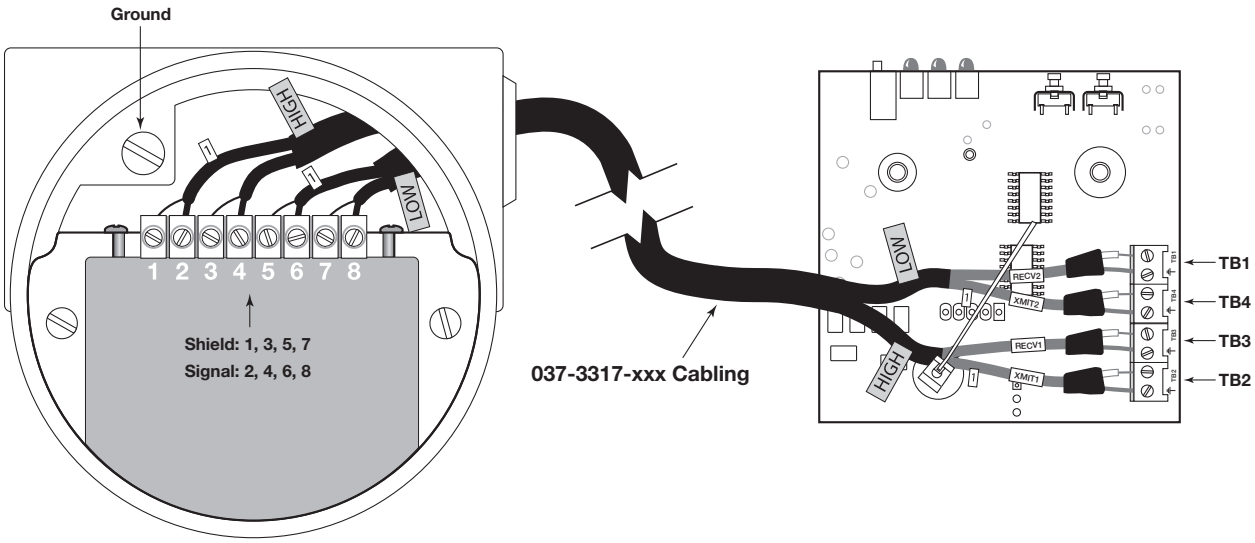

Model 962 Remote Transducer Wiring

Figure 13
Model 962 Loop-Powered Remote Transducer Wiring

Model 962 Loop-powered Remote Mount Wiring

Transducer Gap	Cable Marker	Wire Marker	Transducer Housing TB Position	Wire	Electronics Housing TB & Terminal Position	
Upper	High	1	1	Transmit Shield	TB2	⏚
Upper	High	1	2	Transmit Signal		XMT1
Upper	High	(none)	3	Receive Shield	TB3	⏚
Upper	High	(none)	4	Receive Signal		RCV1
Lower	Low	1	5	Transmit Shield	TB4	⏚
Lower	Low	1	6	Transmit Signal		XMT2
Lower	Low	(none)	7	Receive Shield	TB1	⏚
Lower	Low	(none)	8	Receive Signal		RCV2

NOTE: The Signal wires are 30 AWG RG Type 178/U coax with the white jacket stripped off. The Shield wires are prepared with solid tinned copper 22 AWG bus wire.

2.5 Configuration

2.5.1 Model 961 Line-powered Configuration

Model 961 line-powered units have the following configuration options:

- TIME DELAY potentiometer for 0.5 to 45 second signal averaging
- LEVEL TEST push button for testing of the DPDT process level alarm
- MALF TEST push button for testing of the SPDT malfunction alarm
- Hi/Lo DIP switch for fail-safe high or low level selection
- I/J DIP switch for independent or joint operation of the relays

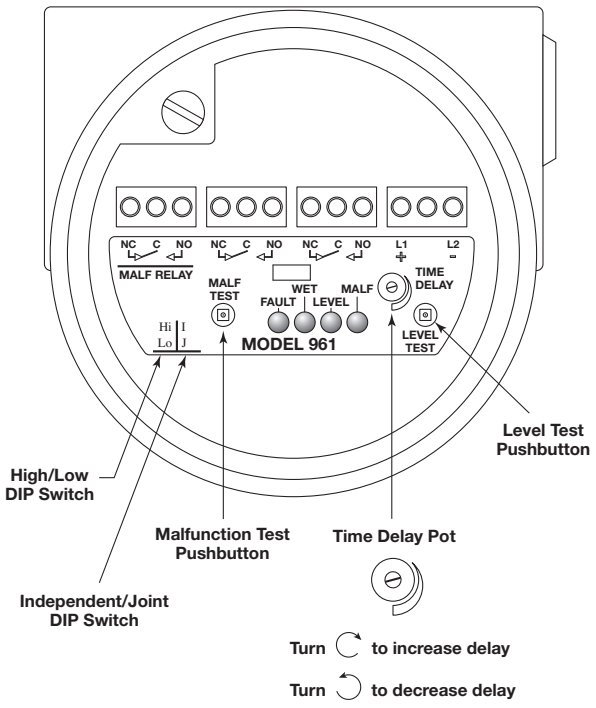

Figure 14
Model 961 Line Power Configuration

Fault and Malfunction LED Indication

Operating Condition	Red Fault LED	Green Malfunction LED
Normal	Off	On
Fault	On	Off

2.5.1.1 Time Delay Potentiometer

The time delay potentiometer is typically used in applications where turbulence or splashing may cause false level alarms. This is a 25-turn pot with a factory default setting of 0.5 seconds. If desired, this pot may be turned clockwise to increase the response time from the standard 0.5 seconds to a maximum of 45 seconds. Turning the pot counter-clockwise decreases the time delay.

The WET LED is not influenced by the time delay pot. As an example, turning the pot clockwise several turns will put a time delay into the 961. Immersing the tip of the transducer in water with the Hi/Lo switch in the Hi position, will produce the following results:

- WET LED will immediately turn on
- After the time delay the LEVEL LED will turn off and the DPDT process level relay will de-energize

When removing the tip of the transducer from the water the WET LED will immediately turn off. After the time delay the LEVEL LED will turn on and DPDT process level relay will energize.

2.5.1.2 Level Test Push Button

The level test push button is used to manually test the DPDT process level relay. Pressing this push button reverses the state of the DPDT relay, from energized to de-energized or vice-versa. This can be used to manually test the relay, and whatever is connected to this relay. The time delay pot does not affect the operation of the level test push button.

2.5.1.3 Malfunction Test Push Button

The malfunction test push button is used to manually test the SPDT malfunction relay. Pressing and holding this push button for 2 seconds will cause the SPDT relay to de-energize indicating a fault condition. This can be used to manually test the relay, and whatever is connected to this relay. The time delay pot does not affect the operation of the malfunction push button.

NOTE: Under normal operating conditions the green MALF (malfunction) LED is on to indicate that the malfunction relay is energized, and the red FAULT LED is off to indicate that there are no faults. Should a fault condition occur, the red FAULT LED turns on and the green MALF LED turns off, indicating that the malfunction relay is de-energized.

2.5.1.4 High/Low DIP Switch

The **Hi/Lo** Dip Switch is used to select whether the Model 961 will be used as a high level fail-safe (HLFS) switch or a low level fail-safe (LLFS) switch.

In the **Hi** position the DPDT process level relay will de-energize (alarm condition) when the gap becomes wet.

In the **Lo** position the DPDT process level relay will de-energize (alarm condition) when the gap becomes dry. The table below provides assistance in configuring the Hi/Lo DIP switch.

High/Low DIP Switch Configuration (Model 961 Line-powered)

Hi/Lo DIP Switch	Gap Condition	Level Condition	Relay Contacts	WET LED	LEVEL LED
Hi (HLFS)	Dry	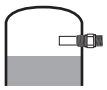 Normal	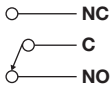 NC C NO Energized	Off	On
Hi (HLFS)	Wet	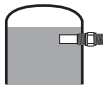 Alarm	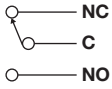 NC C NO De-energized	On	Off
Lo (LLFS)	Wet	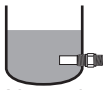 Normal	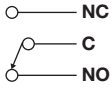 NC C NO Energized	On	On
Lo (LLFS)	Dry	 Alarm	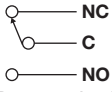 NC C NO De-energized	Off	Off

2.5.1.5 Independent/Joint DIP Switch

The I/J DIP switch is used to configure whether the SPDT malfunction relay acts independently or jointly with the DPDT process level relay. The factory default is for this switch to be in the "I" position, where the relays act totally independent of each other. If this DIP switch is in the "J" position, both the SPDT malfunction relay and the DPDT process relay will de-energize when a fault is detected.

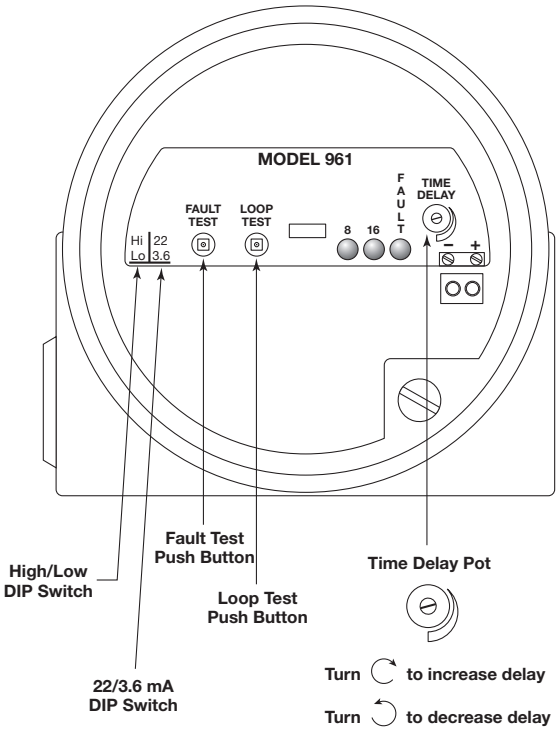

Figure 15
Model 961 Loop Power Configuration

2.5.2 Model 961 Loop-powered Configuration

Model 961 loop-powered units have the following configuration options:

- TIME DELAY potentiometer for 0.5 to 45 second signal averaging
- LOOP TEST push button for testing the 8/16 mA loop output
- FAULT TEST push button for testing the 3.6 or 22 mA fault output
- Hi/Lo DIP switch for fail-safe high or low level selection
- 22/3.6 DIP switch to select the fault mA current output

2.5.2.1 Time Delay Potentiometer

The time delay potentiometer is typically used in applications where turbulence or splashing may cause false level alarms. This is a 25-turn pot with a factory default setting of 0.5 seconds. If desired, this pot may be turned clockwise to increase the response time from the standard 0.5 seconds to a maximum of 45 seconds. Turning the pot counterclockwise decreases the time delay.

2.5.2.2 Loop Test Push Button

The loop test push button is used to manually test the loop current output. Pressing the LOOP TEST push button reverses the output from 8 mA to 16 mA or from 16 mA to 8 mA. This can be used to manually test the loop output and whatever is connected to the 961. The time delay pot does not affect the operation of the loop test push button.

2.5.2.3 Fault Test Push Button

The FAULT TEST push button is used to manually force the 961 to the mA value that is selected at the 22/3.6 DIP switch. Pressing this push button for 2 seconds will simulate a circuit test failure. This causes the output to go to the selected fault current of either 22 or 3.6 mA, and the red FAULT LED will light. The time delay pot does not affect the operation of the FAULT TEST push button.

NOTE: Fault current will be greater than 21 mA, or less than 3.6 mA.

2.5.2.4 High/Low DIP Switch

The Hi/Lo DIP switch is used to select whether the 961 will be used as high level fail-safe switch or low level fail-safe switch. Normal process level operation produces an 8 mA value, and 16 mA is produced when the unit is in a level alarm state. The table can be used to assist in configuring the Hi/Lo DIP switch.

High/Low DIP Switch Configuration (Model 961 Loop-powered)

Hi/Lo DIP Switch	Gap Condition	Level Condition	Output Signal	8 mA LED	16 mA LED	FAULT LED
Hi (HLFS)	Dry	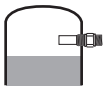 Normal	8 mA (±1 mA)	On	Off	Off
	Wet	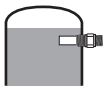 Alarm	16 mA (±1 mA)	Off	On	Off
Lo (LLFS)	Wet	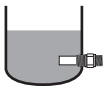 Normal	8 mA (±1 mA)	On	Off	Off
	Dry	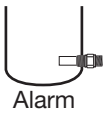 Alarm	16 mA (±1 mA)	Off	On	Off

NOTE: The FAULT LED only turns on during a fault condition.

2.5.2.5 22/3.6 DIP Switch

The 22/3.6 DIP switch is used to select whether the 961 will produce a 22 mA or a 3.6 mA output when the unit detects a fault condition.

NOTE: Fault current will be greater than 21 mA, or less than 3.6 mA.

2.5.3 Model 962 Line-powered Configuration

Model 962 line-powered units have the following configuration options:

- TIME DELAY potentiometer for 0.5 to 45 second signal averaging
- LEVEL TEST push button for testing of the SPDT process level relays
- MALF TEST push button for testing of the SPDT malfunction relay
- Hi/Lo DIP switch for fail-safe high or low level selection
- PC/LC DIP switch for level control or pump control operation

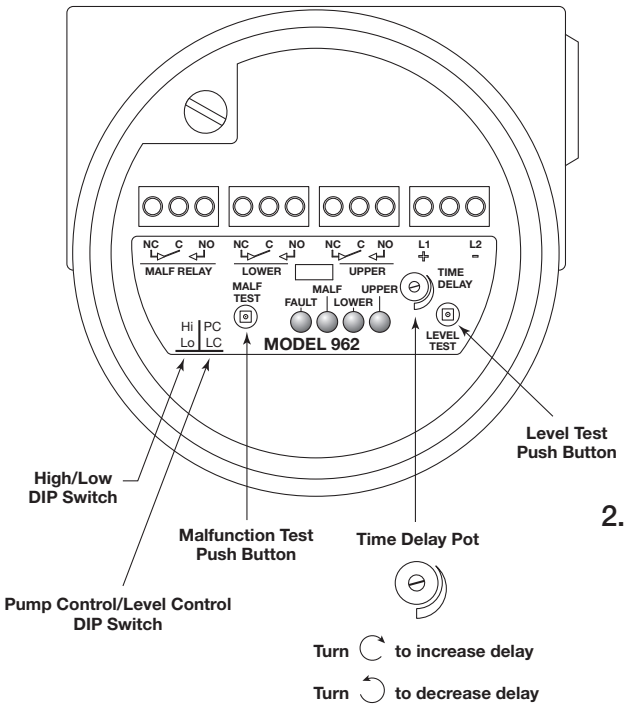

Figure 16
Model 962 Line Power Configuration

2.5.3.1 Time Delay Potentiometer

The time delay potentiometer is typically used in applications where turbulence or splashing may cause false level alarms. This is a 25-turn pot with a factory default setting of 0.5 seconds. If desired, this pot may be turned clockwise to increase the response time from the standard 0.5 seconds to a maximum of 45 seconds. Turning the pot counterclockwise decreases the time delay.

2.5.3.2 Level Test Push Button

The LEVEL TEST push button is used to manually test both of the SPDT process level relays. Pressing this push button reverses the state of both SPDT process level relays, from energized to de-energized or vice-versa. This can be used to manually test these relays, and whatever is connected to them. The time delay pot does not affect the operation of the LEVEL TEST push button.

2.5.3.3 Malfunction Test Push Button

The MALF TEST push button is used to manually test the SPDT malfunction relay. Pressing and holding this push button for 2 seconds will cause all three relays to de-energize, indicating a fault condition. This can be used to manually test the relay, and whatever is connected to this relay. The time delay pot does not affect the operation of the malfunction push button.

Fault and Malfunction LED Indication

Operating Condition	Red Fault LED	Green Malfunction LED
Normal	Off	On
Fault	On	Off

NOTE: Under normal operating conditions the red fault LED is off and the green malfunction LED is on, indicating that the malfunction relay is energized. Should a fault condition occur, the red fault LED turns on and the green malfunction LED turns off, indicating that the malfunction relay is de-energized.

2.5.3.4 High/Low DIP Switch

The Hi/Lo DIP switch is used to select whether the 962 will be used as a high level fail-safe (HLFS) switch or low level fail-safe (LLFS) switch. The setting of the Hi/Lo DIP also affects how the PC/LC DIP switch configures the unit. Read Section 2.5.3.5 below and then proceed to the appropriate table in Section 2.5.3.6 or 2.5.3.7 for proper setting of the DIP switches.

2.5.3.5 PC/LC DIP Switch

The PC/LC DIP switch is used to select whether the 962 will operate in a pump control or a level control mode. Select LC to use the 962 as a level controller where the relays operate independently of each other. Select PC to operate the 962 as a pump controller where the relays latch to enable an auto fill or auto empty mode.

The configuration tables (Section 2.5.3.6 & 2.5.3.7) are used for proper setting of the Hi/Lo and PC/LC DIP switches. They also indicate the status of the yellow LOWER and UPPER LEDs. The green MALF (malfunction) LED and the red FAULT LEDs are not included in these tables.

2.5.3.6 LC and Hi/Lo DIP Switch Configuration Table

Level Control (DIP switch set to LC)

Level Condition	Hi/Lo DIP Switch	Lower Gap		Upper Gap	
		Relay	LED	Relay	LED
	Hi	energized	On	energized	On
	Lo	de-energized	Off	de-energized	Off
	Hi	de-energized	Off	energized	On
	Lo	energized	On	de-energized	Off
	Hi	de-energized	Off	de-energized	Off
	Lo	energized	On	energized	On

NOTE: During a fault condition all three relays de-energize

2.5.3.7 PC and Hi/Lo DIP Switch Configuration Tables

Pump Control (DIP switch set to PC)
Auto-empty Pump Control Sequence

Level Condition	Hi/Lo DIP Switch	Lower Gap		Upper Gap	
		Relay	LED	Relay	LED
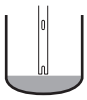	Hi	energized	On	energized	On
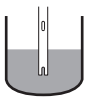	Hi	energized	On	energized	On
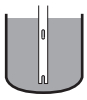	Hi	de-energized	Off	de-energized	Off
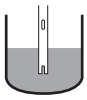	Hi	de-energized	Off	de-energized	Off
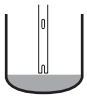	Hi	energized	On	energized	On

NOTE: During a fault condition all three relays de-energize

Pump Control (DIP switch set to PC)
Auto-fill Pump Control Sequence

Level Condition	Hi/Lo DIP Switch	Lower Gap		Upper Gap	
		Relay	LED	Relay	LED
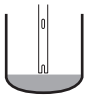	Lo	de-energized	Off	de-energized	Off
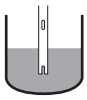	Lo	de-energized	Off	de-energized	Off
	Lo	energized	On	energized	On
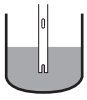	Lo	energized	On	energized	On
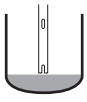	Lo	de-energized	Off	de-energized	Off

NOTE: During a fault condition all three relays de-energize

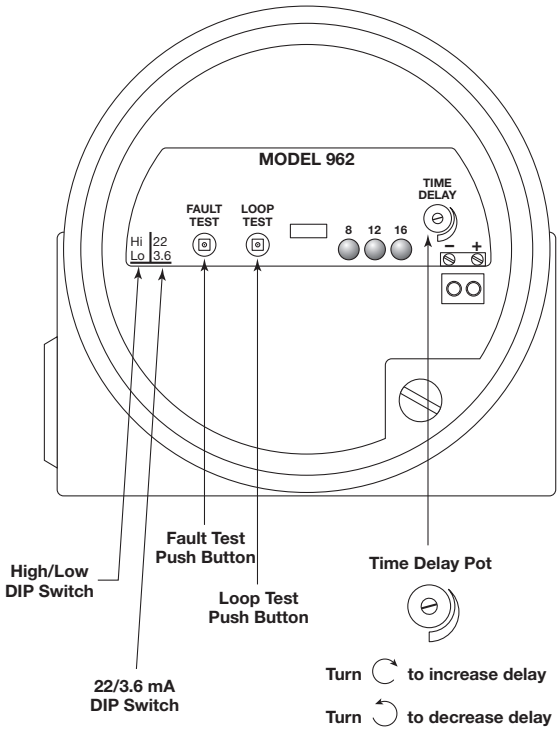

Figure 17
Model 962 Loop Power Configuration

2.5.4 Model 962 Loop-powered Configuration

Model 962 loop-powered units have the following configuration options:

- TIME DELAY potentiometer for 0.5 to 45 second signal averaging
- LOOP TEST push button for testing the 8/12/16 mA loop output
- FAULT TEST push button for testing the 3.6 or 22 mA fault output
- Hi/Lo DIP switch for fail-safe high or low level selection
- 22/3.6 DIP switch to select the fault mA current output

2.5.4.1 Time Delay Potentiometer

The time delay potentiometer is typically used in applications where turbulence or splashing may cause false level alarms. This is a 25-turn pot with a factory default setting of 0.5 seconds. If desired, this pot may be turned clockwise to increase the response time from the standard 0.5 seconds to a maximum of 45 seconds. Turning the pot counterclockwise decreases the time delay.

2.5.4.2 Loop Test Push Button

The loop test push button is used to manually test the loop current output. Pressing the LOOP TEST push button will force the output from 8 mA to 12 mA, 12 mA to 16 mA, or 16 mA to 8 mA. This can be used to manually test the loop output and whatever is connected to the 962. The time delay pot does not affect the operation of the loop test push button.

2.5.4.3 Fault Test Push Button

The FAULT TEST push button is used to manually force the 962 to the mA value that is selected at the 22/3.6 DIP switch. Pressing this push button for 2 seconds will simulate a circuit test failure. This causes the output to go to the selected fault current of either 22 or 3.6 mA, and all 3 LEDs will go dark. The time delay pot does not affect the operation of the FAULT TEST push button.

NOTE: Fault current will be greater than 21 mA, or less than 3.6 mA.

2.5.4.4 High/Low DIP Switch

The Hi/Lo DIP switch is used to select whether the 962 will be used as high level fail-safe switch or low level fail-safe switch. Normal process level operation produces an 8 mA value, and 16 mA is produced when the unit is in a level alarm state. The table below can be used to assist in configuring the Hi/Lo DIP switch:

High/Low DIP Switch Configuration (Model 962 Loop-powered)

Hi/Lo DIP Switch	Level Condition	Output Signal	8 mA Green LED	12 mA Yellow LED	16 mA Red LED
Hi (HLFS)	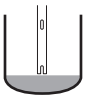	8 mA (±1 mA)	On	Off	Off
		12 mA (±1 mA)	Off	On	Off
		16 mA (±1 mA)	Off	Off	On
Lo (LLFS)		8 mA (±1 mA)	On	Off	Off
		12 mA (±1 mA)	Off	On	Off
	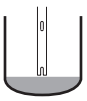	16 mA (±1 mA)	Off	Off	On

NOTE: During a fault condition all three LEDs will turn off

2.5.4.5 22/3.6 DIP Switch

The 22/3.6 DIP switch is used to select whether the 962 will produce a 22 mA or a 3.6 mA output when the unit detects a fault condition.

NOTE: Fault current will be greater than 21 mA or less than 3.6 mA.

3.0 Reference Information

3.1 Electronics Specifications

3.1.1 Model 961/962 with Relay Output

Supply Voltage		102 to 265 VAC, or 18 to 32 VDC
Relay Outputs	961:	One DPDT level relay and one SPDT malfunction relay
	962:	Two SPDT level relays and one SPDT malfunction relay
Relay Ratings	DPDT:	5 amps @ 120 VAC, 250 VAC, and 30 VDC, 0.15 amp @ 125 VDC
	SPDT:	5 amps @ 120 VAC, 250 VAC, and 30 VDC, 0.15 amp @ 125 VDC
Fail-safe		Selectable for high or low level
Power Consumption	961/962:	Less than 3 watts
Ambient Temperature		-40° to +160° F (-40° to +71° C)

3.1.2 Model 961/962 with Current Shift Output

Supply Voltage		11 to 35 VDC
Current Shift Output	Normal Operation:	8 mA
	Level Alarm Condition:	16 mA
	Malfunction:	3.6 mA or 22 mA selectable
Loop Resistance		104 ohms with 11 VDC input, 1100 ohms with 35 VDC input
Fail-safe		Selectable for high or low level
Power Consumption	961/962	Less than 1 watt
Ambient Temperature		-40° to +160° F (-40° to +71° C)

3.2 Performance Specifications

Repeatability		±0.078" (2 mm)
Response Time		½ second typical
Time Delay		Variable 0.5 – 45 seconds on rising and falling levels
Self-Test	Automatic:	Continuously verifies operation of electronics, transducer, piezoelectric crystals, and electrical noise
	Manual:	Push button verifies operation of electronics, transducer, and piezoelectric crystals
Shock Class		ANSI/ISA-S71.03 Class SA1
Vibration Class		ANSI/ISA-S71.03 Class VC2
Humidity		0 – 99%, non-condensing
Electromagnetic Compatibility		Meets CE requirements EN 61326

3.3 Physical Specifications

Housing Material		Cast aluminum A356-T6, or cast 316 stainless steel
Cable Entry		¾" NPT, or M20
Gross Weight	961/962 Electronics:	2.2 lbs. (1.0 kg)
	2" (5 cm) Transducer:	0.6 lbs. (0.3 kg)

3.4 Transducer Specifications

3.4.1 Model 9A1/9M1 Single Point

Transducer Material	Material Code (Section 3.9.2)	Operating Temperature Range	Maximum Pressure ②	Actuation Length
316 Stainless Steel	A①, S, N, K	-40° to +325° F (-40° to +163° C)	2000 psi (138 bar)	1" and 2" (3 and 5 cm)
316 Stainless Steel	A①, S, N, K	-40° to +325° F (-40° to +163° C)	1500 psi (103 bar)	3" to 130" (6 to 330 cm)
Hastelloy C-276	B	-40° to +325° F (-40° to +163° C)	2000 psi (138 bar)	1" and 2" (3 and 5 cm)
Hastelloy C-276	B	-40° to +325° F (-40° to +163° C)	1500 psi (103 bar)	3" to 130" (6 to 330 cm)
Monel	C	-40° to +325° F (-40° to +163° C)	1200 psi (83 bar)	1" to 130" (3 to 330 cm)
Kynar®	R	-40° to +250° F (-40° to +121° C)	see graphs below	2" to 130" (5 to 330 cm)
CPVC	P	-40° to +180° F (-40° to +82° C)	see graphs below	2" to 130" (5 to 330 cm)

3.4.2 Model 9A2/9M2 Dual Point

Transducer Material	Material Code (Section 3.9.3)	Operating Temperature Range	Maximum Pressure ②	Actuation Length
316 Stainless Steel	A, K	-40° to +325° F (-40° to +163° C)	1500 psi (103 bar)	5" to 130" (13 to 330 cm)
CPVC	P	-40° to +180° F (-40° to +82° C)	see graphs below	5" to 130" (13 to 330 cm)

① Model 9A1/9M1 Material Code “A” has a Cryogenic Transducer Option for -110° to +250° F (-80° to +120° C) operating temperature range
② Minimum pressure for all transducers is -10 psi (-0.7 bar)

Kynar Transducer Ratings

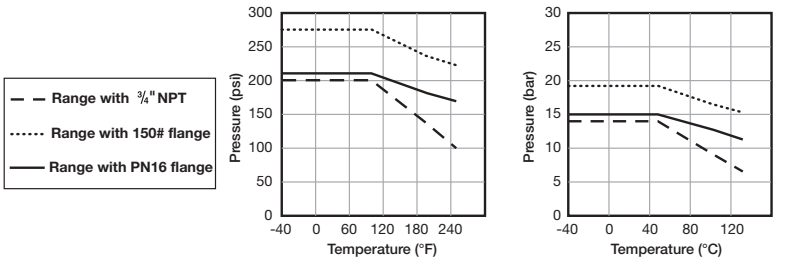

CPVC Transducer Ratings

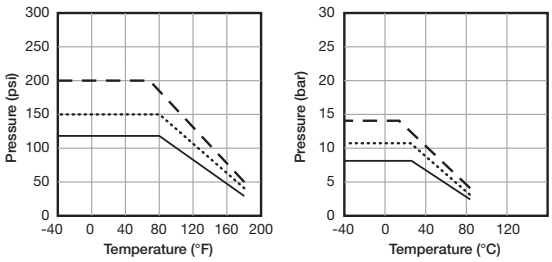

3.5 Dimensional Specifications

Inches (mm)

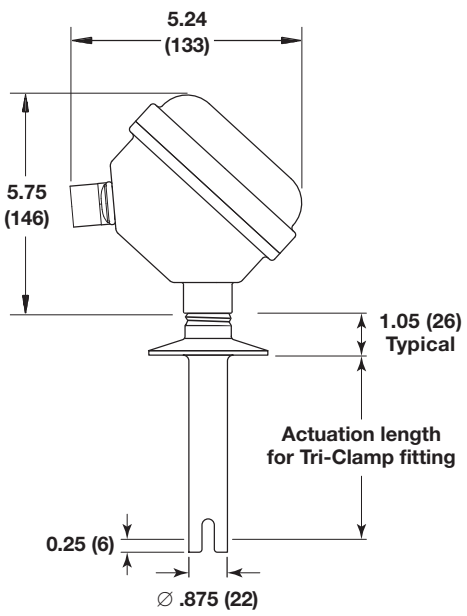

Model 961
with Hygienic Housing
and Tri-Clamp® 16 AMP Fitting

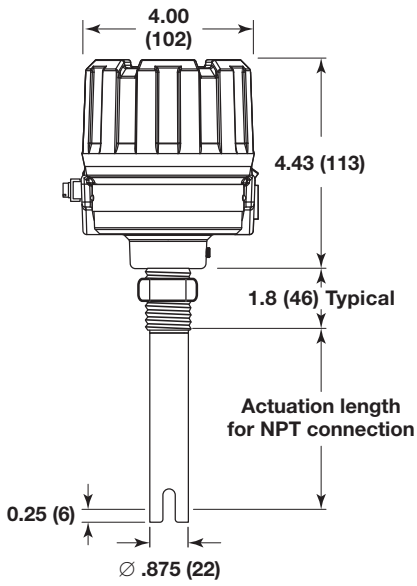

Model 961
with Cast Aluminum Housing
and NPT Connection

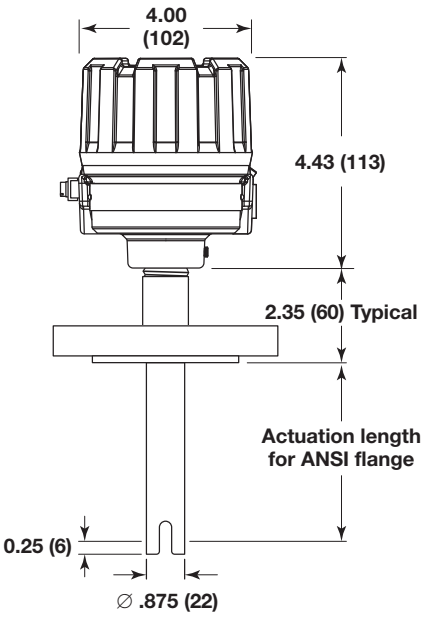

Model 961
with Cast Stainless Steel
Housing and ANSI Flange

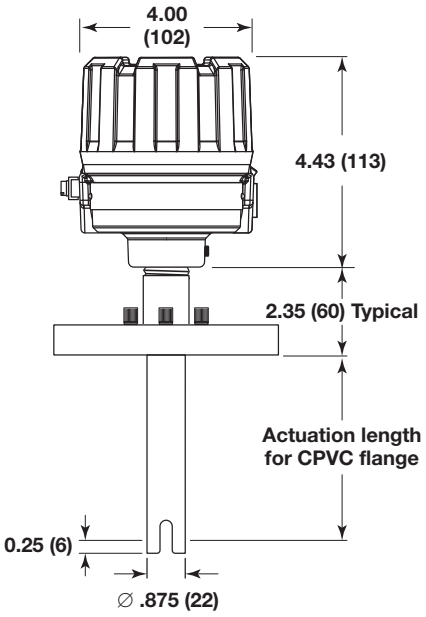

Model 961
with Cast Aluminum Housing
and CPVC Flange

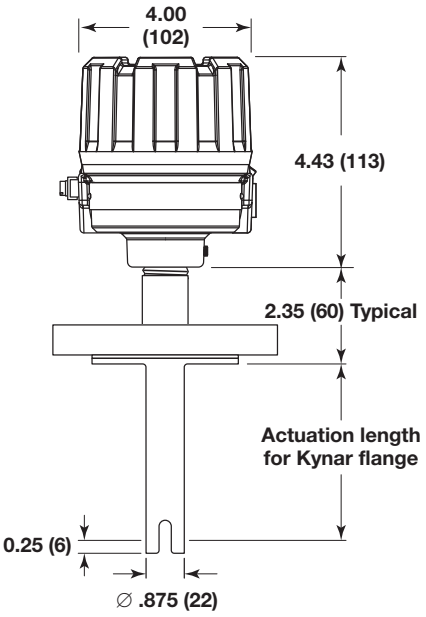

Model 961
with Cast Aluminum Housing
and Kynar Flange

3.5 Dimensional Specifications

Inches (mm)

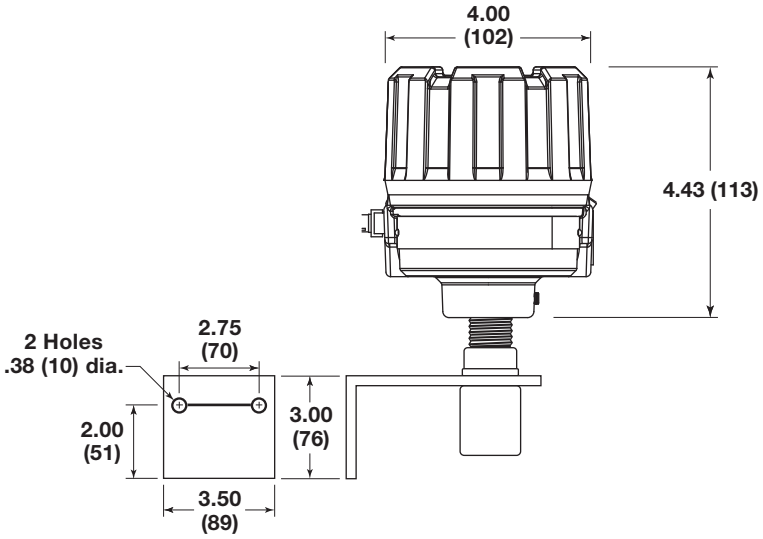

Model 961/962 with Remote Electronics

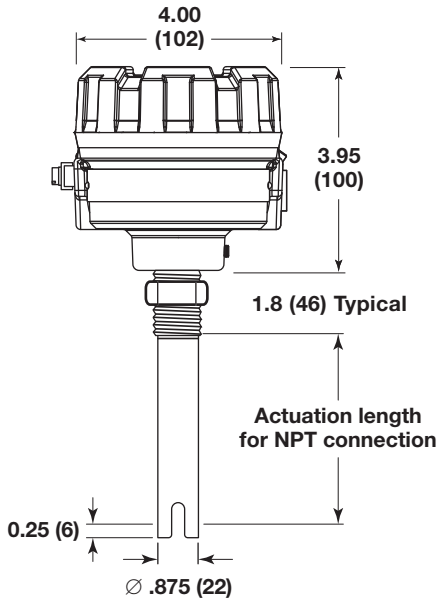

Remote Transducer
with NPT Connection

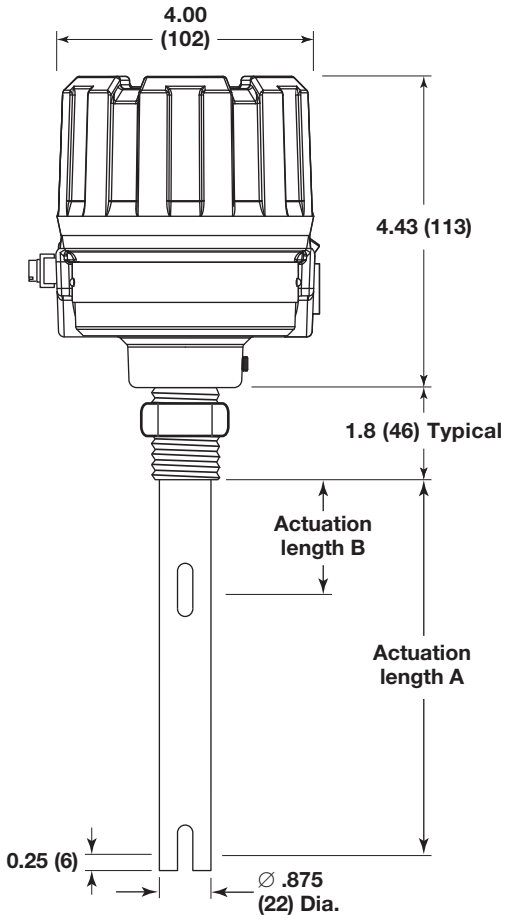

Model 962
with NPT Connection

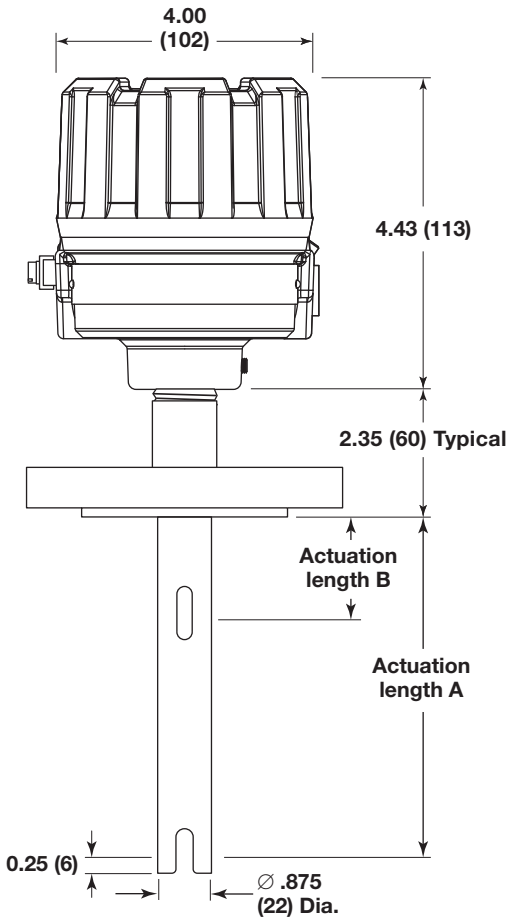

Model 962
with ANSI Flange

3.6 Agency Approvals

AGENCY	APPROVED MODELS	PROTECTION METHOD	AREA CLASSIFICATION
FM & CSA   *All transducers (except Hygienic Connections 3T, 4T & VV from page 33) comply with Canadian Electrical Code requirements of ANSI/ISA 12.27.01-2003 as a single seal device*	96X-X0A0-X10 96X-X0A0-X11 96X-X0A0-X12 96X-X0A0-X13 96X-X0A1-X10 96X-X0A1-X11 96X-XDA0-X30 96X-XDA0-X31 96X-XDA0-X32 96X-XDA0-X33 96X-XDA1-X30 96X-XDA1-X31 with transducers 9AX-XXXX-XXX or 9MX-XXXX-XXX	Explosion Proof	Class I, Div. 1,Groups B, C, & D Class II, Div. 1, Groups E, F, & G Class III, Type 4X, IP 66, T6
	96X-XXAX-XXX or with transducers 9AX-XXXX-XXX or 9MX-XXXX-XXX	Non-Incendive	Class I, Div. 2,Groups A, B, C, & D Class II, Div. 2, Groups E, F, & G Class III, Type 4X, IP 66, T4
	96X-50AX-X1X with transducers 9AX-XXXX-XXX or 9MX-XXXX-XXX	Intrinsically Safe	Class I, Div. 1,Groups A, B, C, & D Class II, Div. 1, Groups E, F, & G Class III, Type 4X, IP 66, T4
ATEX 	96X-XXAX-XC0 96X-XXAX-XC1 96X-XXAX-XC2 96X-XXAX-XC3 with transducers 9XX-AXXX-XXX 9XX-SXXX-XXX 9XX-BXXX-XXX 9XX-CXXX-XXX 9XX-NXXX-XXX 9XX-KXXX-XXX	Flame Proof	Ex II 1/2 G, EEx d IIC T6
	96X-50AX-XA0 96X-50AX-XA1 96X-50AX-XA2 96X-50AX-XA3 with transducers: 9XX-AXXX-XXX 9XX-SXXX-XXX 9XX-BXXX-XXX 9XX-CXXX-XXX 9XX-NXXX-XXX 9XX-KXXX-XXX	Intrinsically Safe	Ex II 1 G, EEx ia IIC T5
INMETRO  	Consult Factory for Approved Models	Explosion Proof Intrinsically Safe	BR-Ex d IIC T6 IP66W BR-Ex ia IIC T5 IP66W

CE These units have been tested to EN 61326 and are in compliance with the EMC Directive 2004/108/EC.

REVISIONS			
SYM	DESCRIPTION	BY & DATE	CHANGE NO.
A	RELEASED	RC 11-03-05	3188-487

HAZARDOUS LOCATIONS

MODEL 961 / 962 Level Switches
Intrinsically Safe for
CL I, Div. 1, Groups *A B C* D
CL II, Div. 1, Groups E F G
CL III, TYPE 4X / IP66

NON-HAZARDOUS LOCATIONS

Limiting Values

Voc <= 30.0V Ca >= 15.5 nF
Isc <= 125 mA La >= 8.58 µH

The voltage (Vmax) and current (Imax), which the transmitter can receive, must be equal to or greater than the maximum open circuit voltage (Voc or V+) and the maximum short circuit current (Isc or Ie) which can be delivered by the source device. In addition, the maximum capacitance (Ci) and inductance (Li) of the load and the capacitance and inductance of the interconnecting wiring must be equal to or less than the capacitance (Ca) or the inductance (La), which can be driven by the source device.

ENTITY

Vmax = 30 V
Imax = 125 mA
Pmax = 1.0 W
Ci = 15.5 nF
Li = 8.58 µH

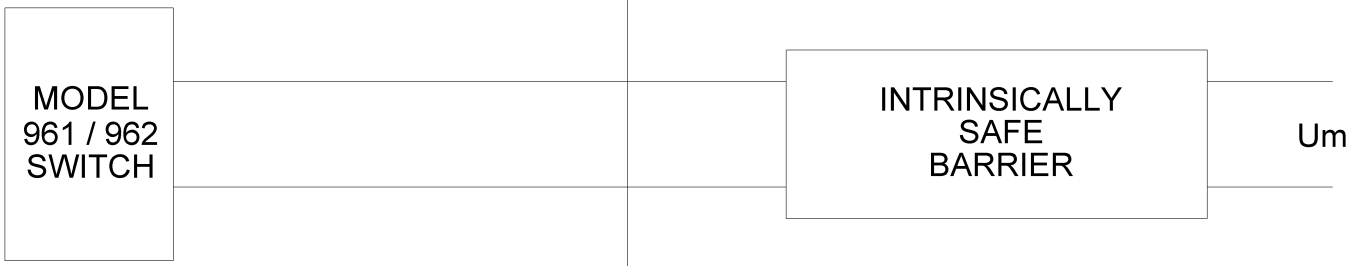

NOTES:

1) Manufacturers installation instructions supplied with the protective barrier. CEC (for CSA) or the NEC and ANSI/ISA RP 12.6 (for FM) must be followed when installing the equipment.
2) Control equipment connected to protective barriers must not use or generate more than 250 Vdc or Vrms.
3) No revisions to this drawing without FMRC and CSA approval.
4) For CSA: Exia Intrinsically Safe / Securite Intrinseque
5) For CSA: Warning – Explosion Hazard – Substitution of components may impair suitability for hazardous locations
   For CSA: Warning – Explosion Hazard – Do not disconnect equipment unless power has been switched off or the area is known to be non-hazardous.
6) For supply connections, use wire suitable for operating temperature. For 71°C ambient, use wire with a minimum temperature rating of 75°C
7) The device can also be installed in
   Class I, Div. 2 Groups A B C D;
   Class II Div. 2, Groups E F & G (F & G only for FMRC);
   Class III Hazardous Locations and does not require connection to a protective barrier when installed per the CEC (for CSA) or the NEC (for FM) and when connected to a power source not exceeding 30 V.

THIRD ANGLE PROJECTION
IN [mm]

THIS DRAWING IS THE EXCLUSIVE PROPERTY OF MAGNETROL INTERNATIONAL. NO USE WHATSOEVER OF THE INFORMATION CONTAINED HEREON, NOR REPRODUCTION IN WHOLE OR IN PART MAY BE MADE WITHOUT THE EXPRESS WRITTEN PERMISSION OF MAGNETROL INTERNATIONAL.

MATERIAL
RAW MATERIAL PART NO.
HEAT FINISH
FINISH

UNLESS OTHERWISE SPECIFIED:
DIMENSIONS ARE IN INCHES.
[ ] OR mm DIMENSIONS ARE IN MILLIMETERS
REMOVE ALL BURRS AND SHARP EDGES
MAX. ALLOWED .032 [0.81]
INSIDE RADII .032 [0.81]R.
ALL FINISHES: 125 OR BETTER
TOLERANCES:
2 PL. DECIMAL ±0.015 IN. [0.4mm]
3 PL. DECIMAL ±0.005 IN. [0.2mm]
ANGULAR ±2°

TITLE: MODEL 96X

DRAWN:	R.CAMPBELL	DATE:	11-03-05
CHECKED:	T.HOFRICHTER	DATE:	11-03-05
APPROVED:	P.SNIDER	DATE:	11-03-05
PROJECT NO.	3188-487	SKETCH NO.	

Magnetrol®
5300 BELMONT ROAD, DOWNERS GROVE
ILLINOIS 60515, AREA CODE 630/969-4000

SCALE: 1:1 SHEET 1 OF 1
SIZE C 099-5065

3.7 Troubleshooting

Caution: In hazardous areas, do not remove the housing cover until power is disconnected and the atmosphere is determined to be safe.

The Model 961/962 has a unique diagnostics feature to assist in troubleshooting should a failure occur. A microprocessor in the electronics continuously monitors all self-test data. Should a fault occur, the microprocessor can determine whether the malfunction is due to the electronics, transducer, piezoelectric crystals, or the presence of environmental noise. A push button and Fault LED is used to assist in troubleshooting the switch:

- One flash of the Fault LED indicates a problem with the transducer, piezoelectric crystals, or the interconnection wiring
- Two flashes of the Fault LED indicates a problem with one of the electronics boards
- Three flashes of the Fault LED indicates presence of excessive levels of environmental noise

If a fault condition is detected by a line-powered 961/962, the MALF LED will turn off indicating that the MALF relay has been de-energized, and the FAULT LED will turn on. If a fault condition is detected by a loop-powered 961, the 8 and 16 mA LED turn off, and the FAULT LED will turn on. If a fault condition is detected by a loop-powered 962, all three LEDs will turn off.

The push button indicated below should be pressed and held while observing the LED:

Electronics Version	Push Button	LED
961 with 5 amp relays	LEVEL TEST	FAULT
961 with current shift	LOOP TEST	FAULT
962 with 5 amp relays	LEVEL TEST	FAULT
962 with current shift	LOOP TEST	16 mA

If the above diagnostic LED flashes once when the push button is pressed, the most common issue is the interconnection wiring between the electronics and the transducer. Check all wiring inside the housing to make sure that all wires are secure in their respective terminal blocks. Make sure that all the terminal block screws are fully tightened. If all wires are secure then contact the factory. A replacement transducer may be needed. See Section 3.9, Model Number, for proper replacement part numbers.

Two flashes of the LED indicates an issue with the electronics module. Contact the factory for a replacement electronics module. See Section 3.8 for spare electronics module part numbers.

Environmental noise is the issue if the diagnostic LED flashes three times. Common sources of environmental noise are conducted electrical noise from a VFD (variable frequency drive), radiated electrical interference from a two-way radio transceiver, or mechanical vibration from some nearby source. This noise could affect the 961/962 and other electrical instrumentation. Check to see if any of the above listed sources may be causing the interference and correct the issue to ensure proper operation of the unit.

It is also possible that application related issues may be affecting the proper operation of the 961/962 unit. The table below assists in troubleshooting.

PROBLEM	ACTION
No signal with level change	Check wiring to make sure proper input voltage is supplied.
	Make sure liquid is reaching the gap. If installed in a riser or standpipe, make sure a vent is provided such that liquid can enter the pipe and wet the transducer gap.
	Check for dense foam on surface or dried product in the gap. Unit may not function properly if either condition exists.
No change in output between wet gap or dry gap	Check to see if transducer gap is plugged with solids.
	Check for dense foam in gap.
The switch is chattering	Check for proper input voltage supply.
	Check for turbulence. Relocate switch or isolate from turbulence.
	Check for excessive aeration.

3.8 Replacement Parts

Model 961/962 Common Parts

Item	Description	Part Number
1	Cast Aluminum Cover without Window	089-6607-005
1	Cast Aluminum Cover with Window	036-4410-010
1	Cast 316 SS Cover without Window	089-6607-006
1	Deep Drawn SS Hygienic Cover without Window	036-5702-003
1	Deep Drawn SS Hygienic Cover with Window	036-5702-002
2	O-Ring with Cast Aluminum or 316 SS Housing	012-2201-237
2	O-Ring with Deep Drawn SS Hygienic Housing	012-2201-155
3	Bezel & Electronics Module Kit	See table below
4	Cast Aluminum Remote Transducer Housing Cover	004-9193-002
4	Cast 316 SS Remote Transducer Housing Cover	004-9193-006
5	Transducer	See Model Number

Model 961 Electronics Modules with Cast Aluminum or 316 SS Housings

Item	Description	Part Number
3	102 to 265 VAC Line-powered Module	089-7259-001
3	18 to 32 VDC Line-powered Module	089-7259-002
3	11 to 35 VDC Loop-powered Module	089-7259-003

Model 961 Electronics Modules with Deep Drawn SS Hygienic Housing

Item	Description	Part Number
3	102 to 265 VAC Line-powered Module	089-7256-001
3	18 to 32 VDC Line-powered Module	089-7256-002
3	11 to 35 VDC Loop-powered Module	089-7256-003

Model 962 Electronics Modules with Cast Aluminum or 316 SS Housings

Item	Description	Part Number
3	102 to 265 VAC Line-powered Module	089-7258-001
3	18 to 32 VDC Line-powered Module	089-7258-002
3	11 to 35 VDC Loop-powered Module	089-7258-003

Model 962 Electronics Modules with Deep Drawn SS Hygienic Housing

Item	Description	Part Number
3	102 to 265 VAC Line-powered Module	089-7257-001
3	18 to 32 VDC Line-powered Module	089-7257-002
3	11 to 35 VDC Loop-powered Module	089-7257-003

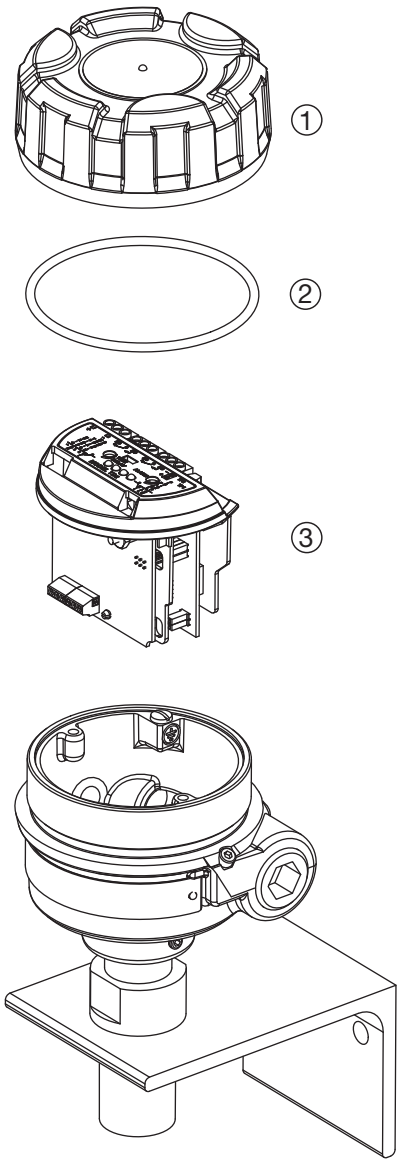

Model 961/962

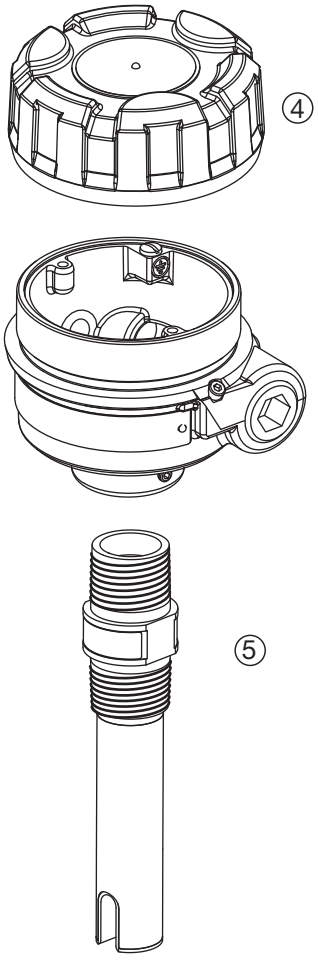

Model 961/962
Remote Transducer

3.9 Model Number

3.9.1 961/962 Electronics

BASIC MODEL NUMBER

961	Single-point electronics
962	Dual-point electronics

INPUT POWER

2	18 to 32 VDC line-powered
5	11 to 35 VDC loop-powered
7	102 to 265 VAC line-powered

OUTPUT SIGNAL

0	mA current shift (available with Input Power code 5)
D	5 amp gold flash relays (available with Input Power codes 2 or 7)

HOUSING COVER

0	Standard housing cover
1	Glass window cover (available with Electronics Housing codes 0, 1, 4 or 5)

MOUNTING

0	Integral
1	Remote ① (requires Connecting Cable from page 35)

AGENCY APPROVAL

1	FM/CSA Intrinsically safe, Non-Incendive & Explosion Proof ② (use with **current shift Output Signal code 0**)
3	FM/CSA Explosion Proof & Non-Incendive (use with **relay Output Signal code D**, and Housing codes 0, 1, 2 & 3)
7	FM/CSA Non-incendive (available with Output Signal codes 0 & D and Housing codes 4 & 5)
A	ATEX II 1G EEx ia II C T5, Intrinsically safe (available with Output Signal code 0)
C	ATEX II 1/2G EEx d II C T6, Explosion proof (available with Output Signal code 0 or D)

ELECTRONICS HOUSING

0	Cast aluminum with ¾" NPT dual conduit entries
1	Cast aluminum with M20 dual conduit entries
2	Cast SS with ¾" NPT dual conduit entries
3	Cast SS with M20 dual conduit entries
4	Deep drawn SS with ½" NPT dual conduit entries
5	Deep drawn SS with M20 dual conduit entries

9	6		—			A		—			

① Not available with housing codes 4 & 5

② Explosion Proof approvals not available with housing codes 4 & 5

3.9.2 Model 961 Single Point Transducer

TRANSDUCER UNIT OF LENGTH

A	English (length in inches)
M	Metric (length in centimeters)

MATERIALS OF CONSTRUCTION

A	316/316L stainless steel
S	316/316L with 20 Ra hygienic finish (use only with Process Connection codes 3T, 4T, or VV)
B	Hastelloy C-276
C	Monel
R	Kynar ③ (use only with Process Connection codes 11, 23, 33, 43, BA, CA, DA)
P	CPVC (use only with Process Connection codes 11, 23, 33, 43, BA, CA, DA)
N	316/316L stainless steel, NACE construction
K	316/316L stainless steel, ASME B31.1 &B31.3 construction

PROCESS CONNECTIONS

THREADED CONNECTIONS

11	¾" NPT
21	1" NPT
22	1" BSP (G1)

HYGIENIC CONNECTIONS

3T	1½" Tri-Clamp® 16 AMP fitting
4T	2" Tri-Clamp® 16 AMP fitting
VV	DN65 – Varivent

ANSI RAISED FACE FLANGES

23	1" 150# ANSI RF flange
24	1" 300# ANSI RF flange
25	1" 600# ANSI RF flange
33	1½" 150# ANSI RF flange
34	1½" 300# ANSI RF flange
35	1½" 600# ANSI RF flange
43	2" 150# ANSI RF flange
44	2" 300# ANSI RF flange
45	2" 600# ANSI RF flange

EN/DIN FLANGES

BA	DN 25 PN 16 EN 1092-1 Type A
BB	DN 25 PN 25/40 EN 1092-1 Type A
BC	DN 25 PN 63/100 EN 1092-1 Type B2
CA	DN 40 PN 16 EN 1092-1 Type A
CB	DN 40 PN 25/40 EN 1092-1 Type A
CC	DN 40 PN 63/100 EN 1092-1 Type B2
DA	DN 50 PN 16 EN 1092-1 Type A
DB	DN 50 PN 25/40 EN 1092-1 Type A
DD	DN 50 PN 63 EN 1092-1 Type B2
DE	DN 50 PN 100 EN 1092-1 Type B2

TRANSDUCER OPTIONS

A	Standard design
C	Cryogenic design to -110° F (-80° C) (available with Materials code A)

ACTUATION LENGTH (unit of length specified in second digit)

1" to 130" in 1" increments (Example: 4 inches = 004) 1" minimum for NPT process connections 2" minimum for BSP, hygienic, and flanged process connections 2" minimum for all Kynar transducers
3 cm to 330 cm in 1 cm increments (Example: 6 centimeters = 006) 3 cm minimum for NPT process connections 5 cm minimum for BSP, hygienic, and flanged process connections 5 cm minimum for all Kynar transducers

9		1								

③ Kynar flanged transducers have Kynar faced 316 stainless steel flanges

3.9.3 Model 962 Dual Point Transducer

TRANSDUCER UNIT OF LENGTH

A	English (length in inches)
M	Metric (length in centimeters)

MATERIALS OF CONSTRUCTION

A	316/316L stainless steel
P	CPVC (use only with Process Connection codes 11, 23, 33, 43, BA, CA, DA)
K	316/316L stainless steel, ASME B31.1 &B31.3 construction

PROCESS CONNECTIONS

THREADED CONNECTIONS

11	¾" NPT
21	1" NPT
22	1" BSP (G1)

ANSI RAISED FACE FLANGES

23	1" 150# ANSI RF flange
24	1" 300# ANSI RF flange
25	1" 600# ANSI RF flange
33	1½" 150# ANSI RF flange
34	1½" 300# ANSI RF flange
35	1½" 600# ANSI RF flange
43	2" 150# ANSI RF flange
44	2" 300# ANSI RF flange
45	2" 600# ANSI RF flange

EN/DIN FLANGES

BA	DN 25 PN 16 EN 1092-1 Type A
BB	DN 25 PN 25/40 EN 1092-1 Type A
BC	DN 25 PN 63/100 EN 1092-1 Type B2
CA	DN 40 PN 16 EN 1092-1 Type A
CB	DN 40 PN 25/40 EN 1092-1 Type A
CC	DN 40 PN 63/100 EN 1092-1 Type B2
DA	DN 50 PN 16 EN 1092-1 Type A
DB	DN 50 PN 25/40 EN 1092-1 Type A
DD	DN 50 PN 63 EN 1092-1 Type B2
DE	DN 50 PN 100 EN 1092-1 Type B2

Important:
Use the "A" dimension as the actuation length code. The "B" dimension must also be specified in quote/order.

Example:
For a 962 with an "A" dimension of 18" and a "B" dimension of 7", specify actuation length code 018.

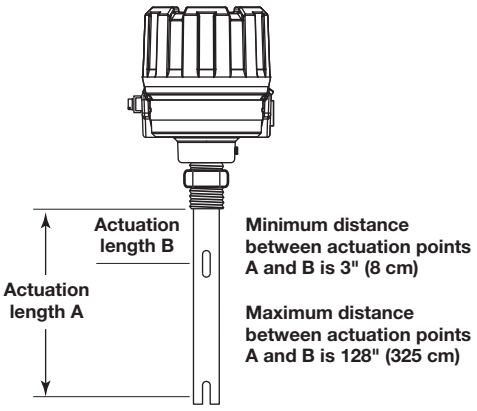

"A" DIMENSION ACTUATION LENGTH (units specified in second digit)

5" to 130" in 1" increments 5" minimum for NPT process connections 6" minimum for BSP, and flanged process connections Example: 5 inches = **005**
13 cm to 330 cm in 1 cm increments 13 cm minimum for NPT process connections 15 cm minimum for BSP, and flanged process connections Example: 13 centimeters = **013**

9		2				A			

3.9.4 Connecting Cable

ELECTRONICS MODEL

6	Remote cable for Model 961
7	Remote cable for Model 962

CONNECTING CABLE LENGTH (FEET)

Maximum Length: 150 feet Minimum Length: 10 feet
Example: 12 feet = **012**

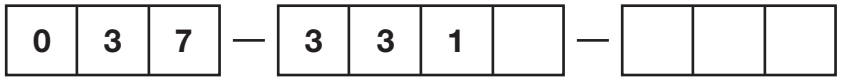

Service Policy

Owners of MAGNETROL controls may request the return of a control or any part of a control for complete rebuilding or replacement. They will be rebuilt or replaced promptly. Controls returned under our service policy must be returned by Prepaid transportation. MAGNETROL will repair or replace the control at no cost to the purchaser (or owner) other than transportation if:

1. Returned within the warranty period; and
2. The factory inspection finds the cause of the claim to be covered under the warranty.

If the trouble is the result of conditions beyond our control; or, is NOT covered by the warranty, there will be charges for labor and the parts required to rebuild or replace the equipment.

In some cases it may be expedient to ship replacement parts; or, in extreme cases a complete new control, to replace the original equipment before it is returned. If this is desired, notify the factory of both the model and serial numbers of the control to be replaced. In such cases, credit for the materials returned will be determined on the basis of the applicability of our warranty.

No claims for misapplication, labor, direct or consequential damage will be allowed.

Return Material Procedure

So that we may efficiently process any materials that are returned, it is essential that a "Return Material Authorization" (RMA) number be obtained from the factory, prior to the material's return. This is available through a MAGNETROL local representative or by contacting the factory. Please supply the following information:

1. Company Name
2. Description of Material
3. Serial Number
4. Reason for Return
5. Application

Any unit that was used in a process must be properly cleaned in accordance with OSHA standards, before it is returned to the factory.

A Material Safety Data Sheet (MSDS) must accompany material that was used in any media.

All shipments returned to the factory must be by prepaid transportation.

All replacements will be shipped F.O.B. factory.

NOTE: See Electrostatic Discharge Handling Procedure on page 5.

Magnetrol®

5300 Belmont Road • Downers Grove, Illinois 60515-4499 • 630-969-4000 • Fax 630-969-9489 • www.magnetrol.com
145 Jardin Drive, Units 1 & 2 • Concord, Ontario Canada L4K 1X7 • 905-738-9600 • Fax 905-738-1306
Heikensstraat 6 • B 9240 Zele, Belgium • 052 45.11.11 • Fax 052 45.09.93
Regent Business Ctr., Jubilee Rd. • Burgess Hill, Sussex RH15 9TL U.K. • 01444-871313 • Fax 01444-871317

Copyright © 2011 MAGNETROL INTERNATIONAL, INCORPORATED. All rights reserved. Printed in the USA.

MAGNETROL, MAGNETROL logotype and ECHOTEL are registered trademarks of MAGNETROL INTERNATIONAL, INCORPORATED.
Kynar® is a registered trademark of Elf Atochem North America, Inc.
Hastelloy® is a registered trademark of HAYNES INTERNATIONAL, INC. (DELAWARE CORPORATION).
Monel® is a registered trademark of the INCO family of companies.

BULLETIN: 51-646.2
EFFECTIVE: June 2010
SUPERCEDES: January 2009