molex
one company > a world of innovation

This document was generated on 06/07/2010

PLEASE CHECK WWW.MOLEX.COM FOR LATEST PART INFORMATION

Part Number: 0955022443
Status: Active
Overview: modular_plugs_jacks
Description: Modular Jack, Through Hole Version, Bottom Entry, 4/4 Circuits

Documents:

3D Model
Drawing (PDF)
Product Specification PS-95502-001 (PDF)
RoHS Certificate of Compliance (PDF)

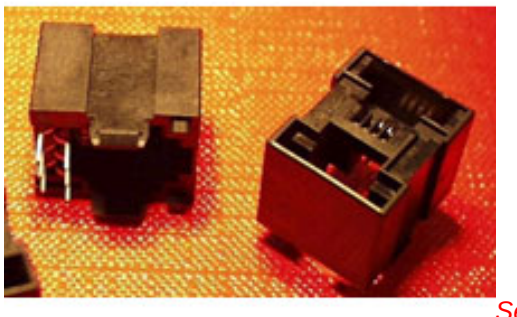

Series image - Reference only

Agency Certification

UL	E107635

General

Product Family	Modular Jacks/Plugs
Series	95502
Component Type	PCB Jack
Magnetic	No
Overview	modular_plugs_jacks
Performance Category	3
Power over Ethernet (PoE)	N/A
Product Name	RJ11

Physical

Boot Color	N/A
Color - Resin	Black
Durability (mating cycles max)	200
Flammability	94V-0
Inverted / Top Latch	No
Lightpipes/LEDs	None
Material - Metal	Phosphor Bronze
Material - Plating Mating	Gold
Material - Plating Termination	Tin
Material - Resin	High Temperature Thermoplastic
Orientation	Bottom Entry
PCB Locator	Yes
PCB Retention	Yes
PCB Thickness Recommended (in)	0.062 In
PCB Thickness Recommended (mm)	1.57 mm
Packaging Type	Tray
Pitch - Mating Interface (in)	0.040 In
Pitch - Mating Interface (mm)	1.02 mm
Pitch - Term. Interface (in)	0.050 In
Pitch - Term. Interface (mm)	1.27 mm
Plating min: Mating (µin)	50.8
Plating min: Mating (µm)	1.27
Plating min: Termination (µin)	76
Plating min: Termination (µm)	1.9
Ports	1
Positions / Loaded Contacts	4/4
Surface Mount Compatible (SMC)	Yes
Temperature Range - Operating	-40°C to +80°C
Termination Interface: Style	Through Hole
Waterproof / Dustproof	No
Wire/Cable Type	N/A

Electrical

EU RoHS
ELV and RoHS Compliant
REACH SVHC
Contains SVHC: No
Halogen-Free Status
Halogen-Free

China RoHS

Need more information on product environmental compliance?

Email productcompliance@molex.com
For a multiple part number RoHS Certificate of Compliance, click here

Please visit the Contact Us section for any non-product compliance questions.

Search Parts in this Series
95502Series

Mates With
90075 FCC 68 Plug

Current - Maximum per Contact	1.5A
Shielded	No
Voltage - Maximum	125V DC

Material Info

Reference - Drawing Numbers

Packaging Specification	PK-95002
Product Specification	PS-95502-001
Sales Drawing	SD-95502-001

This document was generated on 06/07/2010

PLEASE CHECK WWW.MOLEX.COM FOR LATEST PART INFORMATION

NOTES :

1- MATERIAL:

-HOUSING: L C P FIBER GLASS FILLED UL 94-V0 COLOR BLACK.

-MODULE : L C P FIBER GLASS FILLED UL 94-V0 COLOR BLACK.

-TERMINAL: PHOSPHOR BRONZE .

PLATING:

POST PLATE 0.00127-0.00152/.000050-.000060 GOLD IN CONTACT AREA.
0.00190/.000075 MIN PURE TIN IN TAIL AREA BOTH OVER 0.00127/.000050 MIN NICKEL OVERALL.

2- JACK FOR MATING WITH FCC 68 PLUGS 90075 MOLEX SERIES.

3- PCB THICKNESS : 1.57 / .062

4- PRODUCT SPECIFICATION PS-95502-001

5- PACKAGING SPECIFICATION PK-95002

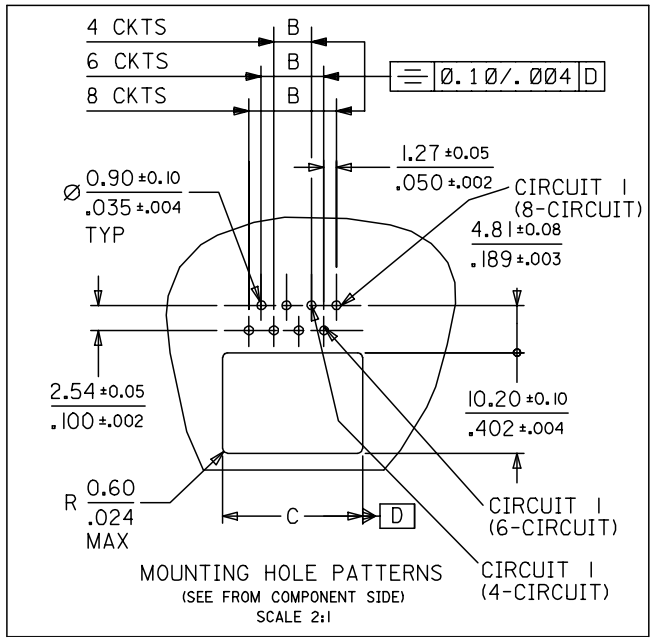

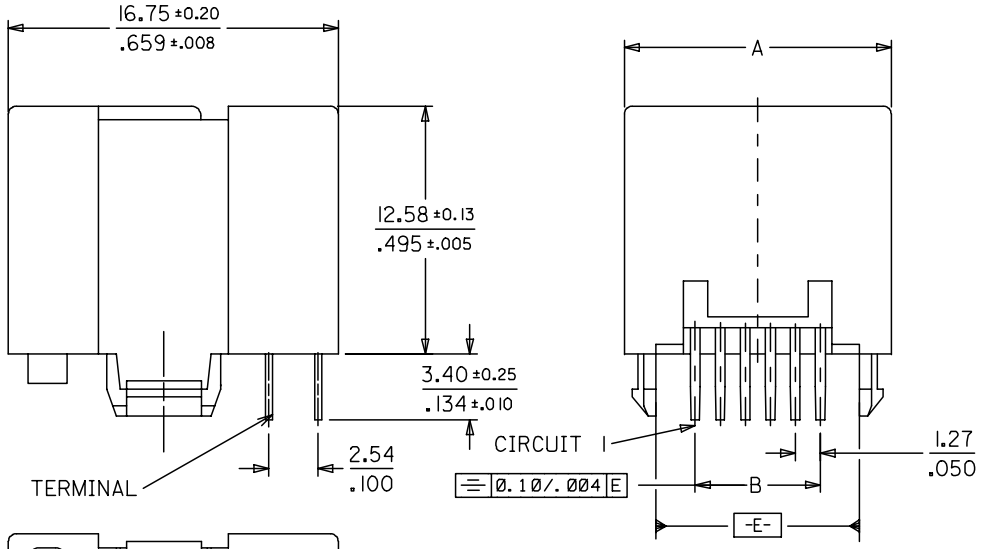

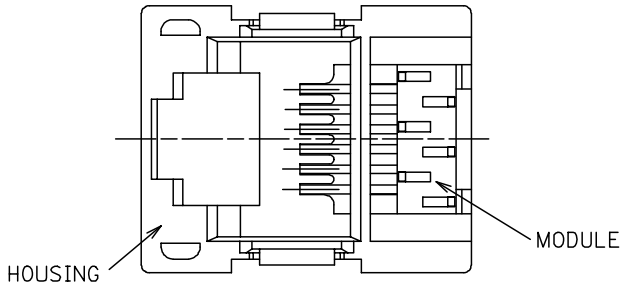

			DIM.		
P/N	HOUSING SIZE	CKTS.	A ±0.13	B $^{+0.05}_{-0.10}$ $^{+.002}_{-.004}$	C ±0.08 ±.003
95502-2443	POS 4	4 CKTS	11.50 / .453	3.81 / .150	10.20 / .402
95502-2643	POS 6	4 CKTS	13.55 / .533	3.81 / .150	12.20 / .480
95502-2663	POS 6	6 CKTS	13.55 / .533	6.35 / .250	12.20 / .480
95502-2883	POS 8	8 CKTS	15.55 / .612	8.89 / .350	14.20 / .559

MODIFIED MATL. 2007/01/22
EC NO: E2007-0611 2007/01/22
DRWN:DBYRNES CHKD: 2007/01/25
APPR:EOMAHONY DESCRIPTION
REV A

QUALITY SYMBOLS
▼=0
▽=0

GENERAL TOLERANCES (UNLESS SPECIFIED)

	mm	INCH
4 PLACES	± ---	± ---
3 PLACES	± ---	±.006
2 PLACES	±0.15	±.010
1 PLACE	±0.25	± ---
ANGULAR ± .5 °		

DRAFT WHERE APPLICABLE MUST REMAIN WITHIN DIMENSIONS

DIMENSION STYLE: MM/IN
SCALE: 4:1
DESIGN UNITS: METRIC
THIRD ANGLE PROJECTION

DRAWN BY: TMARTIN DATE: 2005/05/31
CHECKED BY: FCARABETTA DATE: 2005/05/31
APPROVED BY: KNOLLER DATE: 2005/05/31

TITLE: BOTTOM ENTRY LOW PROFILE MODULAR JACK (THROUGH HOLE VERSION)

molex MOLEX INCORPORATED

MATERIAL NO.: SEE CHART
DOCUMENT NO.: SD-95502-001
SHEET NO.: 1 OF 1

SIZE A3

THIS DRAWING CONTAINS INFORMATION THAT IS PROPRIETARY TO MOLEX INCORPORATED AND SHOULD NOT BE USED WITHOUT WRITTEN PERMISSION