# HIRSCHMANN MOBILITY



# CELLULAR (2G/3G)/ GNSS (GPS/GLONASS)/ WLAN/Bluetooth (2.4GHz) Screw Antenna

## CGNW 852124 LP S/series

Pt. no.
**955-162-...**

- Low current consumption
- Ground plane independent
- For vertical installation

Subject to alterations

## 1. Technical data

| | |
|---|---|
| Dimensions | 162mm x 70mm x 22mm |
| Weight | approx. 230 g including mounting nut |
| Temperature range | -40 to +85 °C |
| Protection class | Braided sleeve option |
| **Cellular** | |
| Frequency range | 824 to 960 and 1710 to 2170 MHz<br>(GSM 850/900/1800/1900), UMTS |
| VSWR | 3.0:1 max |
| Gain | typ.2 dBi |
| Load capacity | |
| **GPS/GLONASS** | |
| Frequency range | 1575 - 1614 MHz. |
| Impedance | 50 Ω |
| Gain | typ. 2 dBic[3] |
| Amplification | typ. 15 dB, 20dB max. |
| Noise figure (50 Ohm) | 2.0 dB max |
| Voltage supply | 2.7 V - 5.5 V DC |
| Current consumption | ≤ 6 mA@5 V |
| **WLAN + BLUETOOTH** | |
| Frequency Range | 2400 - 2484 MHz |
| Gain | typ. 5 dBi |
| Polarization | Linear |
| VSWR | 2.0:1 max |
| Impedance | 50 Ω |
| Power Rating | 100 mWmin. |

[1] Other cable lengths available upon request

[2] Other configurations available upon request

[3] dBic: referenced to an isotropic radiator, circular polarization

Subject to alterations

## 2. Product Family

| Order code | Cable length[1] | | | Connector type [2] | | | Remark |
|---|---|---|---|---|---|---|---|
| | CELLULAR | GNSS | WLAN | CELLULAR | GNSS | WLAN | |
| Versions | L1 | L2 | L3 | C1 | C2 | C3 | Cell/GNSS/WLAN |
| 955-162-001 | 2200mm ± 20mm | 2200mm | 2200mm | FAKRA D f | FAKRA C f BLUE | FAKRA B f WHITE | RG58LL/RG74LL/RG174LL |
| | | | | | | | |
| Customization of cable lengths and connectors possible. | | | | | | | |

## 3. Technical Drawings

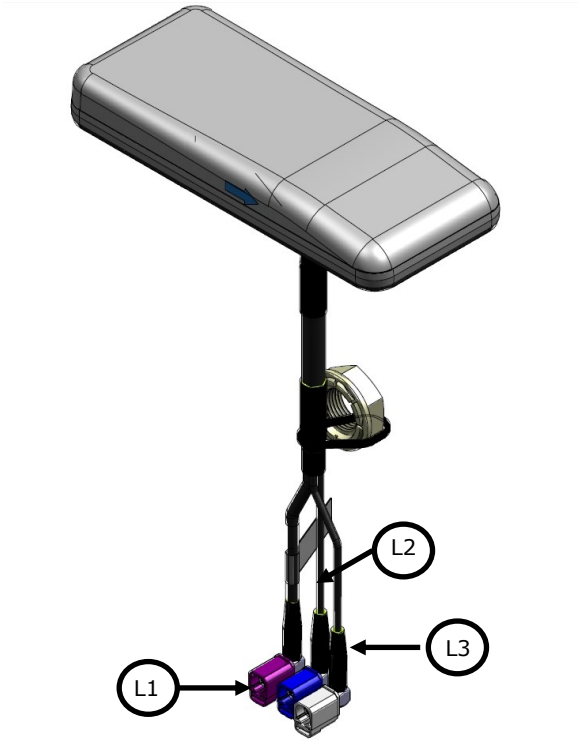




Subject to alterations

## 4. Mounting example and procedure

### Vehicle roof mounting

#### Mounting requirements and restrictions

- Choose appropriate mounting location on flat surface (see Sketch #1).
- Max. tolerable mounting material thickness 10 mm.
- Safely drill 15 mm mounting hole at desired location (see Sketch #2).
- Clean mounting area with isopropyl alcohol or similar.
- Unscrew mounting nut.
- Feed all cables through mounting hole.
- Slide slotted mounting nut over cables and screw back on to antenna mounting stud.
- Maximum tightening torque is 5Nm.

**Sketch #1 - Select Mounting Location**

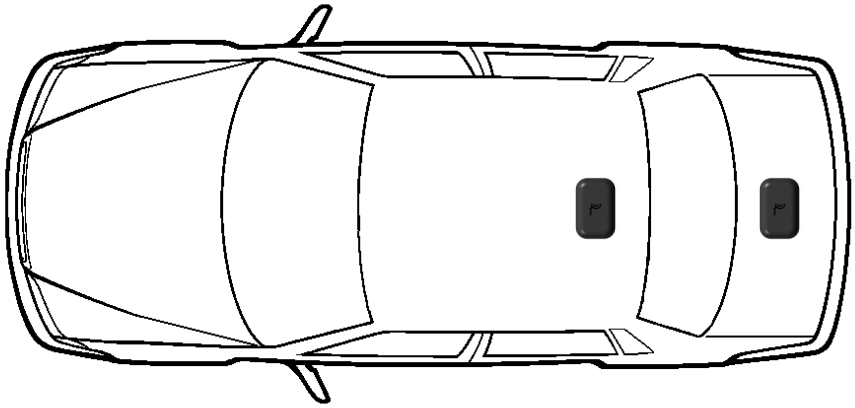

**Sketch #2—Required Mounting hole**

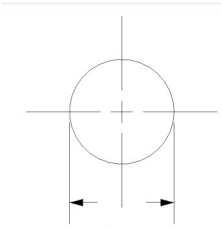

Max. Ø 19 ± 0.2 mm



**www.te.com/hirschmann-mobility**

**hirschmann-mobility@te.com**

TE, TE Connectivity, TE connectivity (logo), and EVERY CONNECTION COUNTS are trademarks.
Hirschmann is a trademark.

GSM, UMTS, GLONASS and FAKRA are trademarks.

The information given herein, including drawings, illustrations and schematics which are intended for illustration purposes only, is believed to be reliable. However, TE Connectivity makes no warranties as to its accuracy or completeness and disclaims any liability in connection with its use. TE Connectivity's obligations shall only be as set forth in TE Connectivity's Standard Terms and Conditions of Sale for this product and in no case will TE Connectivity be liable for any incidental, indirect or consequential damages arising out of the sale, resale, use or misuse of the product. Users of TE Connectivity products should make their own evaluation to determine the suitability of each such product for the specific application.
© 2019 TE Connectivity Ltd. family of companies All Rights Reserved.