This document was generated on 03/02/2010

PLEASE CHECK WWW.MOLEX.COM FOR LATEST PART INFORMATION

Part Number: 0945120200

Status: Active

Description: Quick Disconnect, High Reliability Terminal (HRT), Female for 1.00-2.50mm² (10-18 AWG) Wire, Accepts 6.30mm (.250") x 0.81mm (.032") Tab , Unplated

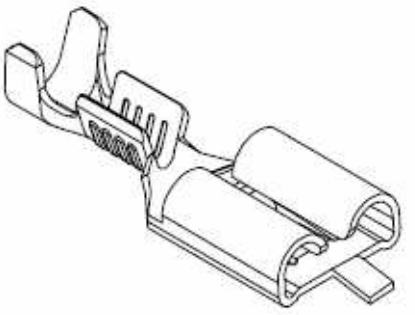

Series image - Reference only

Documents:

Drawing (PDF)

RoHS Certificate of Compliance (PDF)

General

Product Family	Quick Disconnects
Series	94512
Crimp Quality Equipment	Yes
Product Name	N/A
Type	Quick Disconnect

Physical

Barrel Type	Open
Gender	Female
Glow-Wire Compliant	No
Insulation	None
Lock to Mating Part	None
Material - Metal	Brass
Material - Plating Mating	Unplated
Material - Plating Termination	Tin
Orientation	Straight
Packaging Type	Reel
Polarized to Mating Part	Yes
Tab Thickness	0.81mm (.032")
Tab Width	6.35mm (.250")
Temperature Range - Operating	-25°C to +55°C
Termination Interface: Style	Crimp or Compression
Wire Size AWG	10, 14, 16, 18, 24
Wire Size mm²	1.00 - 2.50

Electrical

Voltage - Maximum	250V

Material Info

Reference - Drawing Numbers

Sales Drawing	SD-94512-004

EU RoHS
ELV and RoHS Compliant
REACH SVHC
Not Reviewed
Halogen-Free Status
Not Reviewed

China RoHS

Need more information on product environmental compliance?

Email productcompliance@molex.com
For a multiple part number RoHS Certificate of Compliance, click here

Please visit the Contact Us section for any non-product compliance questions.

Search Parts in this Series
94512Series

Use With
94090 Quick Disconnect Housing

Application Tooling | **FAQ**

Tooling specifications and manuals are found by selecting the products below. Crimp Height Specifications are then contained in the Application Tooling Specification document.

Global

Description	Product #
Mini-Mac™ Applicator, Use with Applicator Rear Feed Hand Crimp Tool for Quick Disconnect, High Reliability Crimp Terminals (HRT), Female for 1.00-2.50mm²	0638042000 0638194200

This document was generated on 03/02/2010

PLEASE CHECK WWW.MOLEX.COM FOR LATEST PART INFORMATION

SEZIONE C - C

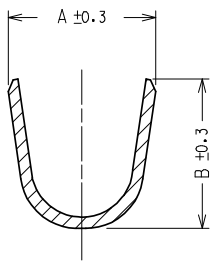

SEZIONE B - B

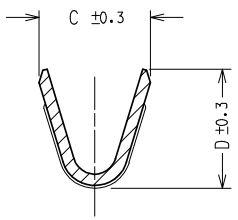

SEZIONE A - A

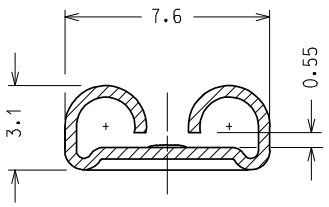

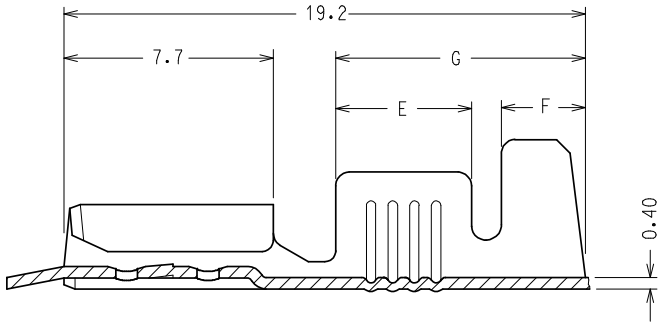

CODICE *P/N*	FINITURA *PLATING*	MATERIALE *MATERIAL*	SEZ. RAME *WIRE RANGE* (mm^2)	ø ISOLANTE *INS. RANGE* (mm)	DIMENSIONI / *DIMENSION* (mm) A	B	C	D	E	F	G	PZ/BOBINA *PCS/REEL*	S.P.Q.
94512-0000	GREGGIO/ *UNPLATED*	OTTONE/ *BRASS*	0.2 <-> 0.5	1.2 <-> 2.1	3.0	2.9	2.3	2.3	3.1	1.8	6.3	7.000	21.000
94512-0001	STAGNATO/ *TIN*												
94512-0100	GREGGIO/ *UNPLATED*	OTTONE/ *BRASS*	0.5 <-> 1.0	2.0 <-> 3.3	4.5	4.5	3.0	3.0	4.2	2.4	8.2	7.000	21.000
94512-0101	STAGNATO/ *TIN*												
94512-0111	NICHELATO/ *NICKEL*	ACCIAIO/ *STEEL*											
94512-0130	GREGGIO/ *UNPLATED*	ALPACCA/ *PACKFONG*											
94512-0200	GREGGIO/ *UNPLATED*	OTTONE/ *BRASS*	1.0 <-> 2.5	2.7 <-> 4.3	5.5	5.5	4.1	4.3	5.0	3.1	9.1	6.000	18.000
94512-0201	STAGNATO/ *TIN*												
94512-0211	NICHELATO/ *NICKEL*	ACCIAIO/ *STEEL*											
94512-0230	GREGGIO/ *UNPLATED*	ALPACCA/ *PACKFONG*											
94512-0301	STAGNATO/ *TIN*	OTTONE/ *BRASS*	2.5 <-> 6.0	3.8 <-> 5.1	6.0	6.4	5.4	5.6	5.0	3.1	9.1	5.000	15.000
94512-0311	NICHELATO/ *NICKEL*	ACCIAIO/ *STEEL*											

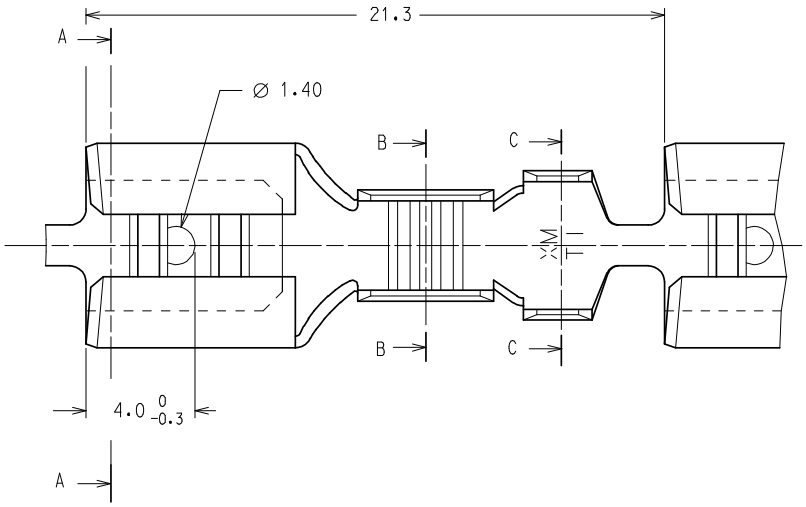

Confezione Standard: 3 Bobine x Scatola

Caratteristiche di Prodotto secondo PS 94512-001

Packaging: 3 Reels x Box

Product Characteristics according to PS 94512-002

Std. Descr.. HRT FEM TERM [material] [plating] [wire range]

EC NO: Z2008-0123 2008/02/25
DRWN:LSANTESS 2008/02/25
CH'KD:LSANTESS 2008/02/25
APPR:GZUIN
DESCRIPTION
E
REV

QUALITY SYMBOLS
▼=0
Ⓒ=0

GENERAL TOLERANCES (UNLESS SPECIFIED)

	mm	INCH
4 PLACES	± ---	± ---
3 PLACES	± ---	± ---
2 PLACES	± 0.1	± ---
1 PLACE	± 0.2	± ---
ANGULAR ± 2 °		

DRAFT WHERE APPLICABLE MUST REMAIN WITHIN DIMENSIONS

DIMENSION STYLE: MM ONLY
SCALE: 5:1
DESIGN UNITS: METRIC
FIRST ANGLE PROJECTION

DRAWN BY: F.GOTTARDO DATE: 1989-12-01
CHECKED BY: M.PREVIATO DATE: 1989-12-01
APPROVED BY: R.MARTUCCI DATE: 1989-12-01

TITLE: HIGH RELIABILITY FEMALE TERMINAL 6.3 X 0.8

molex MOLEX INCORPORATED

MATERIAL NO.: See chart
DOCUMENT NO.: SD-94512-004
SHEET NO.: 1 OF 1

SIZE A3

THIS DRAWING CONTAINS INFORMATION THAT IS PROPRIETARY TO MOLEX INCORPORATED AND SHOULD NOT BE USED WITHOUT WRITTEN PERMISSION