DRW NO.	SH	REV
C942-4000-000	1	C

ZONE	REV	SCR NUMBER	DESCRIPTION	BY	DATE	APPROVED
ALL	A	AASY-7L5Q87.VER01	NEW RELEASE	HCL-RB	11/12/2008	D.SMITH
	B	AASY-7X7NSQ.VER01	ADDED CUSTOM APPLICATION IN SHEET 3	HCL-RK	11/12/2009	D.SMITH
	C	JDUM-88VQHC.VER01	ADDED DETAILS OF XCede ORTHO 4 PAIR	HCL-AP	09/14/2010	D.SMITH

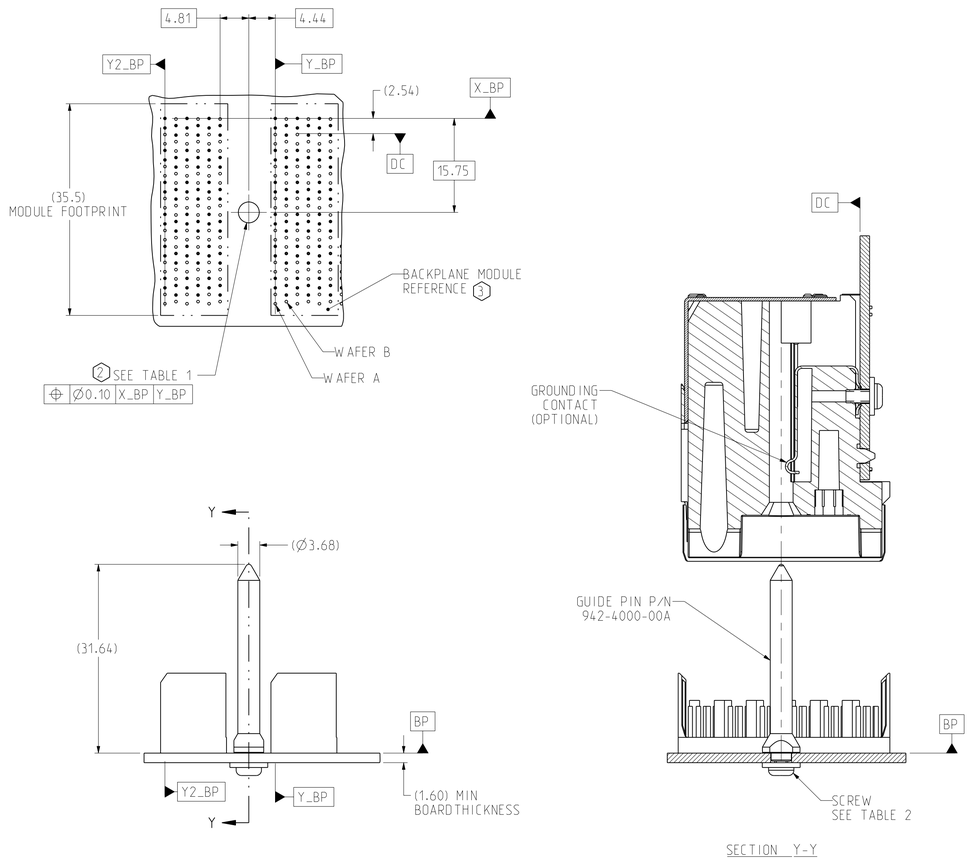

6 PAIR CONFIGURATION

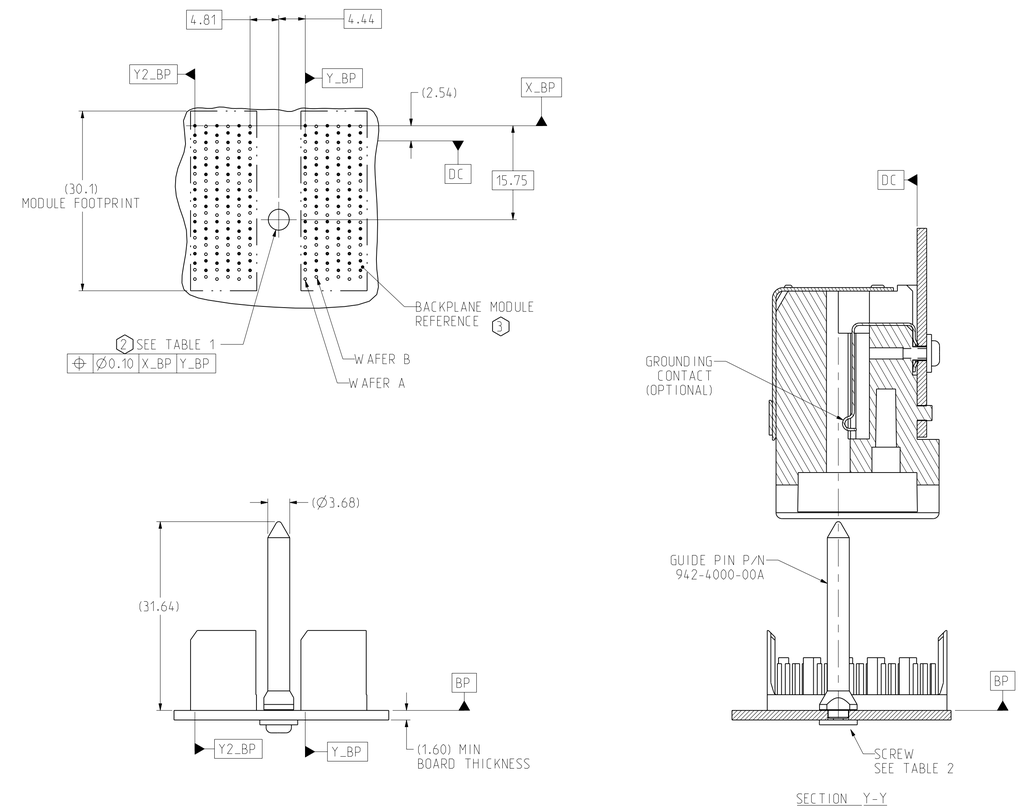

5 PAIR CONFIGURATION

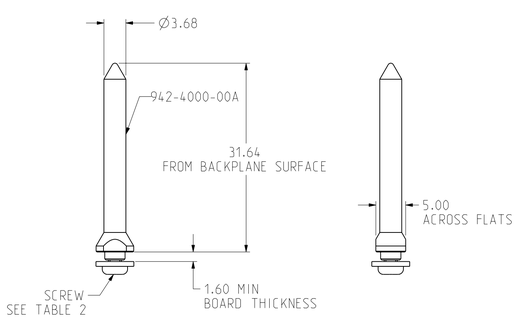

TABLE 1

	UNGROUNDED	GROUNDED 2
FHS	Ø3.48 - 3.63	Ø3.48 - 3.63
PAD	N/A	Ø6.5
PLATED	NO	YES
DRILL (mm)	3.57 mm	3.66 mm
DRILL (in)	0.1405″	0.144″

TABLE 2

SCREW P/N	DESCRIPTION	BOARD THICKNESS
577-0014-000	#2-56 X 0.375″ LG. PHILIPS PANHEAD W/SQ CONICAL WASHER	1.60 - 5.00 mm
577-0015-000	#2-56 X 0.5″ LG. PHILIPS PANHEAD W/SQ CONICAL WASHER	5.00 - 8.00 mm
577-0016-000	#2-56 X 0.625″ LG. PHILIPS PANHEAD W/SQ CONICAL WASHER	8.00 - 10.00 mm

NOTES:

1. REFER TO TB-2150 FOR XCede PRODUCT SPECIFICATIONS.

2. PLATED THROUGH HOLE TO CONNECT TO CHASSIS FOR GROUNDED GUIDE MODULE OPTION. SEE TB-2149 FOR ROUTING GUIDELINES.

3. REFER TO BP CUSTOMER USE DRAWING FOR ROW AND COLUMN ASSIGNMENTS.

TOLERANCES	
0.0	±0.25
0.00	±0.13
0.000	± -
ANGLES	± 3°

DESIGN 08/25/06 C.LEIGHTON
DRAWN 07/25/2006 LEIGHTON
CHK 07/25/2006 LEIGHTON
APVD 07/25/2006 A.PFAHNL

UNLESS OTHERWISE SPECIFIED DIMENSIONS ARE IN MM.DECIMAL MARKER IS PERIOD

INTERPRET PER ASME Y14.5M

CUSTOMER USE DRAWING

CODE IDENT 31413

Amphenol TCS
A Division of Amphenol Corporation
200 Innovative Way, Nashua, NH 03062 603.879.3000

TITLE
STANDALONE. GUIDE PIN.Ø3.68 mm
XCede 3. 4. 5. 6 PAIR BACKPLANE

PART NO.	REV
942-4000-00A	N/A
DRAWING NO. C942-4000-000	REV C
Pro/E type: Q1109-CONNECTOR6-GUIDE Pro/E DRAWING: C942-4000-000	1.14 C.0

SIZE D | SCALE 2/1 | SHEET 1 OF 3

DRW NO. C942-4000-000 | SH 1 | REV C

DRW NO.	SH	REV
C942-4000-000	2	C

ZONE	REV	SCR NUMBER	DESCRIPTION	BY	DATE	APPROVED
			SEE SHEET 1			

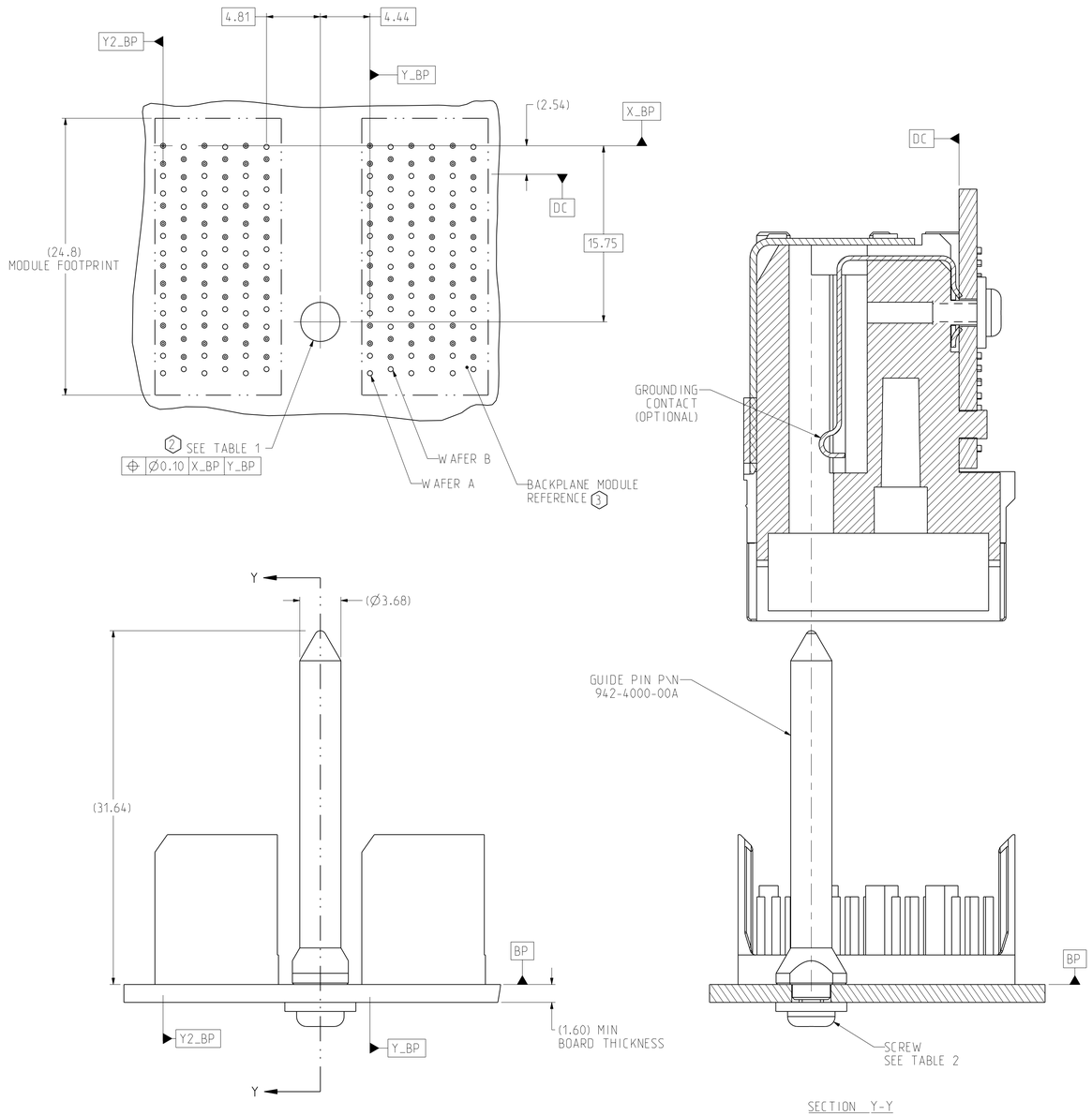

4 PAIR CONFIGURATION

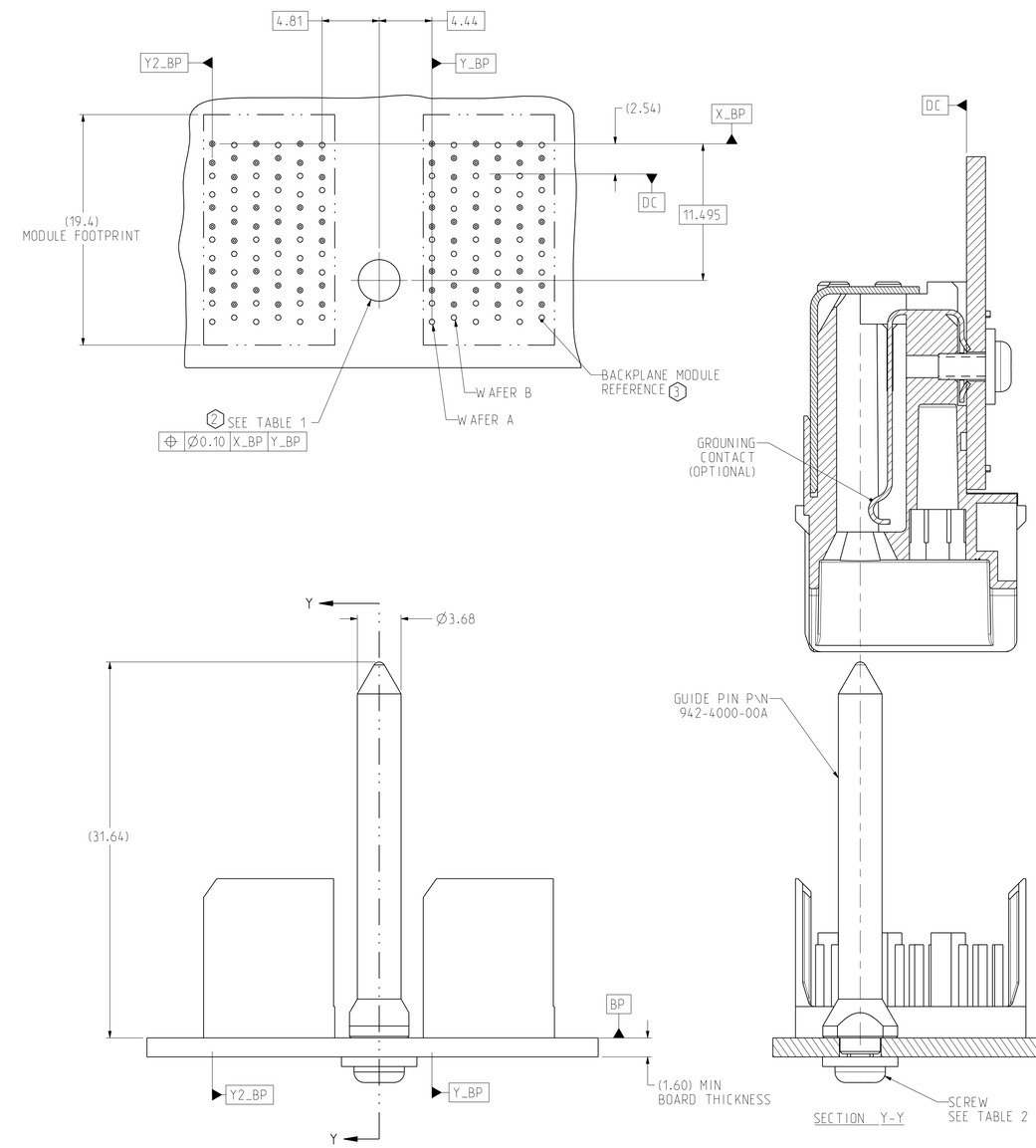

3 PAIR CONFIGURATION

TOLERANCES	
0.0	±0.25
0.00	±0.13
0.000	± -
ANGLES	± 3°

UNLESS OTHERWISE SPECIFIED DIMENSIONS ARE IN MM.DECIMAL MARKER IS PERIOD

INTERPRET PER ASME Y14.5M

CODE IDENT 31413

CUSTOMER USE DRAWING

DESIGN	07/19/2006	C.LEIGHTON
DRAWN	07/25/2006	LEIGHTON
CHK	07/25/2006	LEIGHTON
APVD	07/25/2006	A.PFAHNL

Amphenol TCS
A Division of Amphenol Corporation
200 Innovative Way, Nashua, NH 03062 603.879.3000

TITLE
STANDALONE. GUIDE PIN.Ø3.68 mm
XCede 3. 4. 5. 6 PAIR BACKPLANE

PART NO.	REV
942-4000-00A	N/A
DRAWING NO. C942-4000-000	REV C
Pro/E type: Q1109-CONNECTOR6-GUIDE Pro/E DRAWING: C942-4000-000	4.9 C.0

SIZE	SCALE	SHEET
D	2/1	2 OF 3

DRW NO. C942-4000-000 SH 2 REV C

DRW NO.	SH	REV
C942-4000-000	3	C

ZONE	REV	SCR NUMBER	DESCRIPTION	BY	DATE	APPROVED
			SEE SHEET 1			

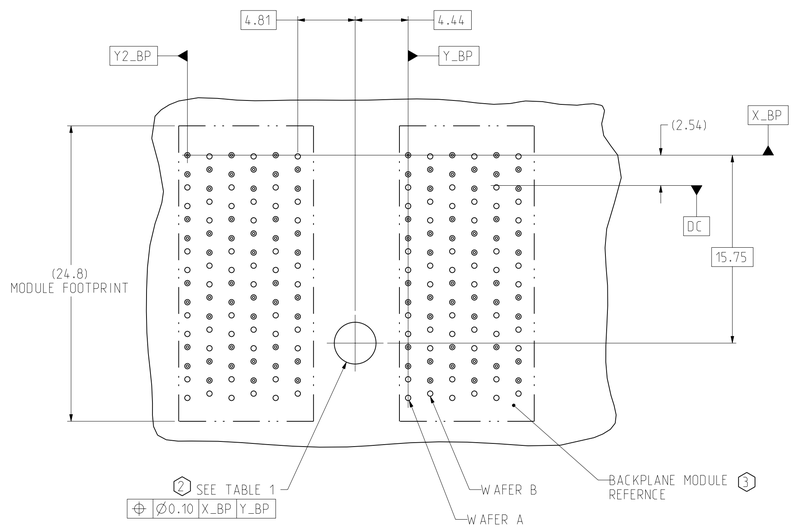

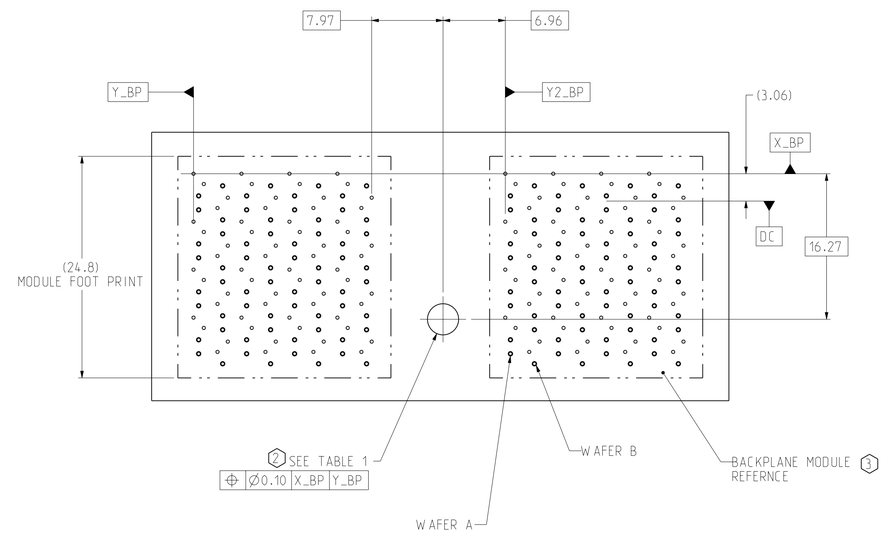

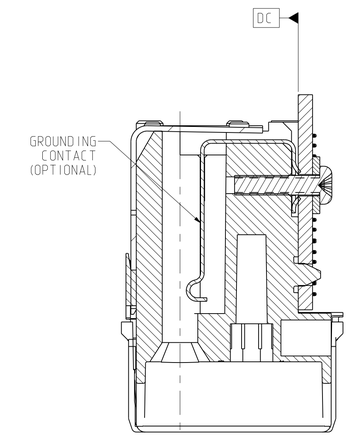

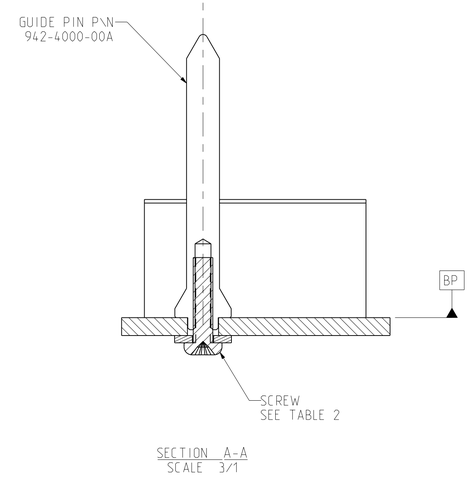

SECTION A-A
SCALE 3/1

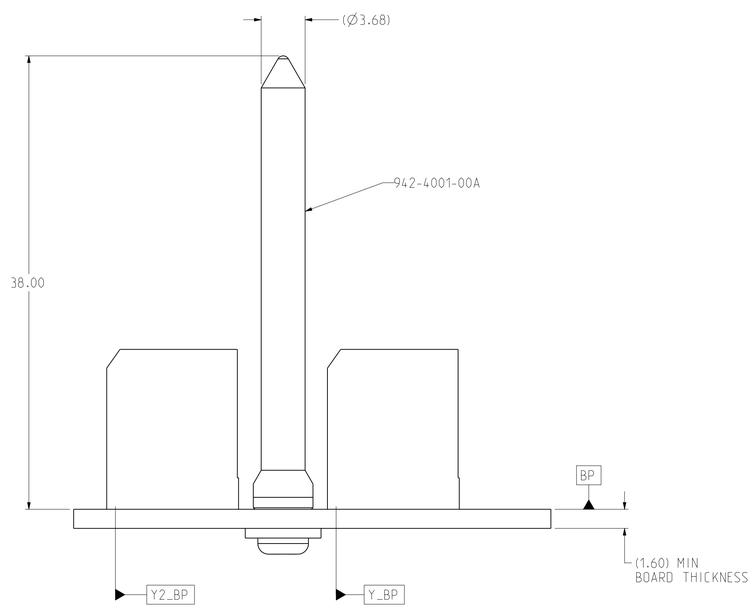

CUSTOM STANDALONE GUIDE PIN APPLICATION

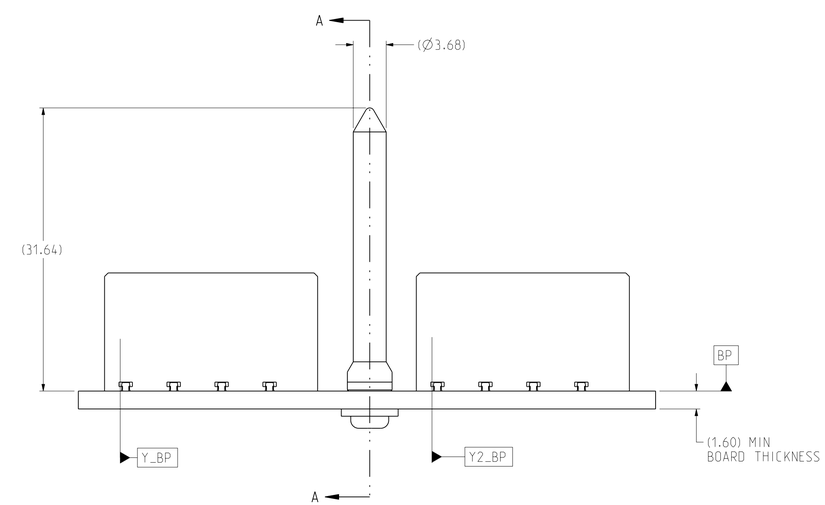

ORTHO 4 PAIR CONFIGURATION

TOLERANCES	
0.0	±0.25
0.00	±0.13
0.000	± -
ANGLES	± 3°

UNLESS OTHERWISE SPECIFIED DIMENSIONS ARE IN MM. DECIMAL MARKER IS A PERIOD

INTERPRET PER ASME Y14.5M

CODE IDENT 31413

CUSTOMER USE DRAWING

DESIGN 07/19/2006 C.LEIGHTON
DRAWN 07/25/2006 LEIGHTON
CHK 07/25/2006 LEIGHTON
APVD 07/25/2006 A.PFAHNL

Amphenol TCS
A Division of Amphenol Corporation
200 Innovative Way, Nashua, NH 03062 603.879.3000

TITLE STANDALONE. GUIDE PIN.Ø3.68 mm
XCede 3. 4. 5. 6 PAIR BACKPLANE

PART NO. 942-4000-00A — REV N/A
DRAWING NO. C942-4000-000 — REV C
Pro/E type: Q1109-CONNECTOR6-GUIDE — 4.9
Pro/E DRAWING: C942-4000-000 — C.0

SIZE D | SCALE 2/1 | SHEET 3 OF 3

DRW NO. C942-4000-000 SH 3 REV C