942-003
Sav-Con® Connector Saver Plug/Receptacle
for Use with MIL-DTL-38999 Series I

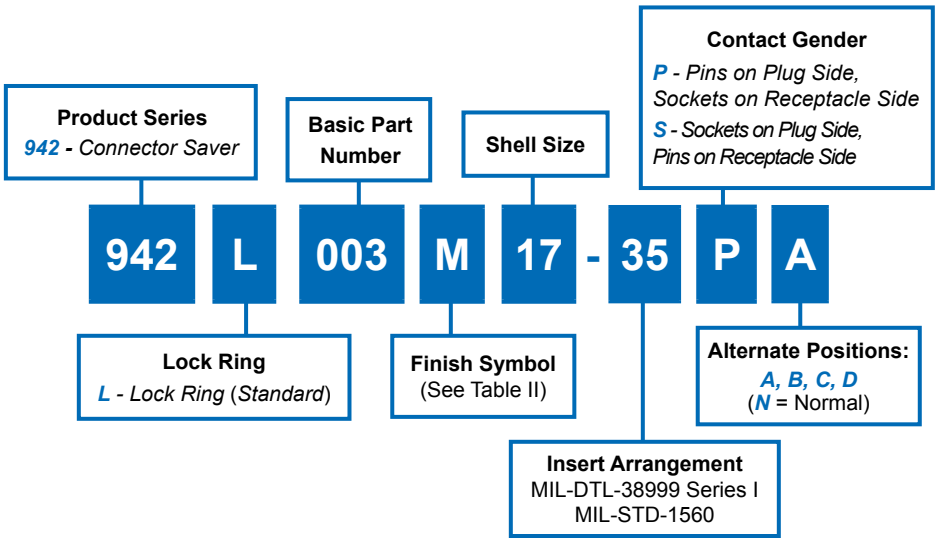

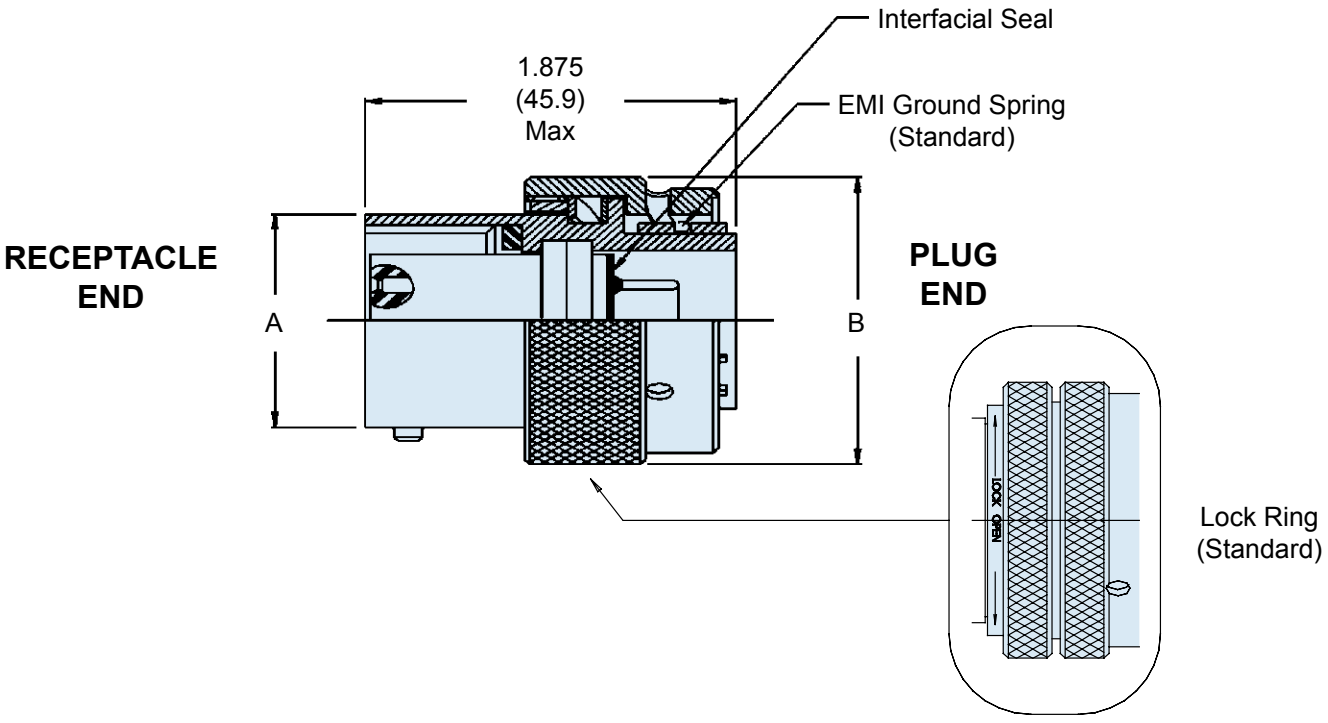

© 2010 Glenair, Inc.

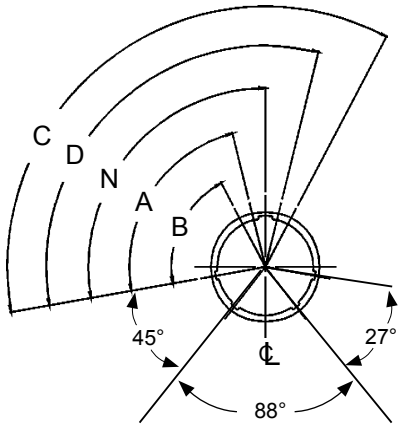

FACE VIEW
RECEPTACLE

SERIES I: ALTERNATE KEYWAY POSITIONS					
SHELL SIZE	N°	A°	B°	C°	D°
09	95	77	--	--	113
11	95	81	67	123	109
13	95	75	63	127	115
15	95	74	61	129	116
17	95	77	85	125	113
19	95	77	65	125	113
21	95	77	65	125	113
23	95	80	69	121	110
25	95	80	69	121	110

TABLE II: SHELL FINISHES		
Plating Code	Material	Finish
M	Aluminum	Electroless Nickel
B	Aluminum	Cad Plate, Olive Drab
NF	Aluminum	Cadmium Plate Olive Drab over Electroless Nickel
NC	Aluminum	Zinc-Cobalt
ZN	Aluminum	Olive Drab Zinc-Nickel
MT	Aluminum	Ni-PTFE *1000 Hour Grey™* (Nickel Flourocarbon Polymer)

TABLE I: CONNECTOR DIMENSIONS		
SHELL SIZE	A Max	B Diameter Max
09	.573 (14.6)	.910 (23.1)
11	.701 (17.8)	1.035 (26.3)
13	.851 (21.6)	1.210 (30.7)
15	.976 (24.8)	1.330 (33.8)
17	1.101 (28.0)	1.455 (37.0)
19	1.208 (30.7)	1.570 (39.9)
21	1.333 (33.9)	1.695 (43.1)
23	1.458 (37.0)	1.800 (45.7)
25	1.583 (40.2)	1.925 (48.9)

© 2010 Glenair, Inc.