National Semiconductor

June 1989

9334/DM9334 8-Bit Addressable Latch

General Description

The DM9334 is a high speed 8-bit Addressable Latch designed for general purpose storage applications in digital systems. It is a multifunctional device capable of storing single line data in eight addressable latches, and being a one-of-eight decoder and demultiplexer with active level high outputs. The device also incorporates an active level low common clear for resetting all latches, as well as an active level low enable.

The DM9334 has four modes of operation which are shown in the mode selection table. In the addressable latch mode, data on the data line (D) is written into the addressed latch. The addressed latch will follow the data input with all non-addressed latches remaining in their previous states. In the memory mode, all latches remain in their previous state and are unaffected by the data or address inputs.

In the one-of-eight decoding or demultiplexing mode, the addressed output will follow the state of the D input with all other inputs in the low state. In the clear mode all outputs are low and unaffected by the address and data inputs.

When operating the device as an addressable latch, changing more than one bit of the address could impose a transient wrong address. Therefore, this should only be done while in the memory mode.

The function tables summarize the operation of the product.

Features

- Common clear
- Easily expandable
- Random (addressable) data entry
- Serial to parallel capability
- 8 bits of storage/output of each bit available
- Active high demultiplexing/decoding capability
- Alternate Military/Aerospace device (9334) is available. Contact a National Semiconductor Sales Office/Distributor for specifications.

Connection Diagram

Dual-In-Line Package

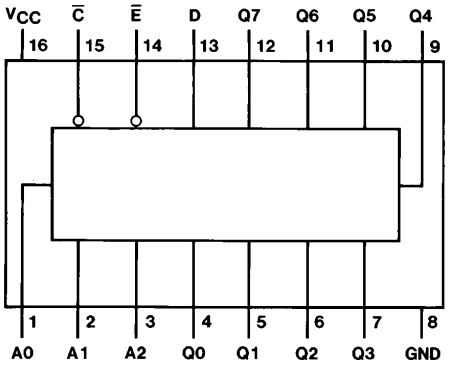

TL/F/6609–1

Order Number 9334DMQB, 9334FMQB, DM9334J or DM9334N
See NS Package Number J16A, N16E or W16A

©1995 National Semiconductor Corporation

RRD-B30M105/Printed in U. S. A.

Absolute Maximum Ratings (Note)

If Military/Aerospace specified devices are required, please contact the National Semiconductor Sales Office/Distributors for availability and specifications.

Supply Voltage	7V
Input Voltage	5.5V
Operating Free Air Temperature Range	
Military	−55°C to +125°C
Commercial	0° to +70°C
Storage Temperature Range	−65°C to +150°C

Note: *The "Absolute Maximum Ratings" are those values beyond which the safety of the device cannot be guaranteed. The device should not be operated at these limits. The parametric values defined in the "Electrical Characteristics" table are not guaranteed at the absolute maximum ratings. The "Recommended Operating Conditions" table will define the conditions for actual device operation.*

Recommended Operating Conditions

Symbol	Parameter		Military			Commercial			Units
			Min	Nom	Max	Min	Nom	Max	
V_{CC}	Supply Voltage		4.5	5	5.5	4.75	5	5.25	V
V_{IH}	High Level Input Voltage		2			2			V
V_{IL}	Low Level Input Voltage				0.8			0.8	V
I_{OH}	High Level Output Current				−0.8			−0.8	mA
I_{OL}	Low Level Output Current				16			16	mA
t_W	ENABLE Pulse Width (Fig. 1) (Note 4)		19	13		19	13		ns
t_{SU}	Setup Time (Note 4)	Data 1 (Fig. 4)	20	13		20	13		ns
		Data 0 (Fig. 4)	20	14		20	14		
		Address (Fig. 6) (Note 1)	10	5		10	5		
t_H	Hold Time (Note 4)	Data 1 (Fig. 4)	0	−10		0	−10		ns
		Data 0 (Fig. 4)	0	−13		0	−13		
T_A	Free Air Operating Temperature		−55		125	0		70	°C

Electrical Characteristics over recommended operating free air temperature range (unless otherwise noted)

Symbol	Parameter	Conditions		Min	Typ (Note 2)	Max	Units
V_I	Input Clamp Voltage	V_{CC} = Min, I_I = −12 mA				−1.5	V
V_{OH}	High Level Output Voltage	V_{CC} = Min, I_{OH} = Max V_{IL} = Max, V_{IH} = Min		2.4	3.6		V
V_{OL}	Low Level Output Voltage	V_{CC} = Min, I_{OL} = Max V_{IH} = Min, V_{IL} = Max			0.2	0.4	V
I_I	Input Current @ Max Input Voltage	V_{CC} = Max, V_I = 5.5V				1	mA
I_{IH}	High Level Input Current	V_{CC} = Max V_I = 2.4V	$\overline{E}$ Input			60	μA
			Others			40	
I_{IL}	Low Level Input Current	V_{CC} = Max V_I = 0.4V	$\overline{E}$ Input			−2.4	mA
			Others			−1.6	
I_{OS}	Short Circuit Output Current	V_{CC} = Max (Note 3)	MIL	−30		−100	mA
			COM	−30		−100	
I_{CC}	Supply Current	V_{CC} = Max			56	86	mA

Note 1: The ADDRESS setup time is the time before the negative ENABLE transition that the ADDRESS must be stable so that the correct latch is addressed without affecting the other latches.

Note 2: All typicals are at V_{CC} = 5V, T_A = 25°C.

Note 3: Not more than one output should be shorted at a time, and the duration should not exceed one second.

Note 4: T_A = 25°C and V_{CC} = 5V.

Switching Characteristics at $V_{CC} = 5V$ and $T_A = 25°C$ (See Section 1 for Test Waveforms and Output Load)

Symbol	Parameter	From (Input) To (Output)	$R_L = 400\Omega$, $C_L = 15$ pF		Units
			Min	Max	
t_{PLH}	Propagation Delay Time Low to High Level Output	Enable to Output, Fig. 1		28	ns
t_{PHL}	Propagation Delay Time High to Low Level Output	Enable to Output, Fig. 1		27	ns
t_{PLH}	Propagation Delay Time Low to High Level Output	Data to Output, Fig. 2		35	ns
t_{PHL}	Propagation Delay Time High to Low Level Output	Data to Output, Fig. 2		28	ns
t_{PLH}	Propagation Delay Time Low to High Level Output	Address to Output, Fig. 3		35	ns
t_{PHL}	Propagation Delay Time High to Low Level Output	Address to Output, Fig. 3		35	ns
t_{PHL}	Propagation Delay Time High to Low Level Output	Clear to Output, Fig. 5		31	ns

Function Tables

$\overline{E}$	$\overline{C}$	Mode
L	H	Addressable Latch
H	H	Memory
L	L	Active High Eight Channel Demultiplexer
H	L	Clear

Inputs						Present Output States								Mode
$\overline{C}$	$\overline{E}$	D	A0	A1	A2	Q0	Q1	Q2	Q3	Q4	Q5	Q6	Q7	
L	H	X	X	X	X	L	L	L	L	L	L	L	L	Clear
L	L	L	L	L	L	L	L	L	L	L	L	L	L	
L	L	H	L	L	L	H	L	L	L	L	L	L	L	
L	L	L	H	L	L	L	L	L	L	L	L	L	L	
L	L	H	H	L	L	L	H	L	L	L	L	L	L	
•	•	•		•					•					Demultiplex
•	•	•		•					•					
•	•	•		•					•					
L	L	H	H	H	H	L	L	L	L	L	L	L	H	
H	H	X	X	X	X	Q_{N-1}								Memory
H	L	L	L	L	L	L	Q_{N-1}	Q_{N-1}	Q_{N-1}					
H	L	H	L	L	L	H	Q_{N-1}	Q_{N-1}						
H	L	L	H	L	L	Q_{N-1}	L	Q_{N-1}						
H	L	H	H	L	L	Q_{N-1}	H	Q_{N-1}						Addressable Latch
•	•	•		•				•						
•	•	•		•				•						
•	•	•		•				•						
H	L	L	H	H	H	Q_{N-1}						Q_{N-1}	L	
H	L	H	H	H	H	Q_{N-1}						Q_{N-1}	H	

X = Don't Care Condition

L = Low Voltage Level

H = High Voltage Level

Q_{N-1} = Previous Output State

Logic Diagram

9334

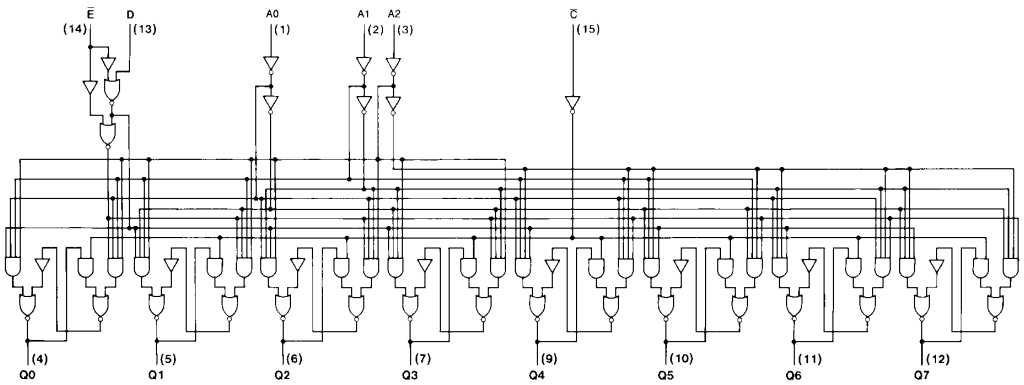

TL/F/6609–2

Switching Time Waveforms

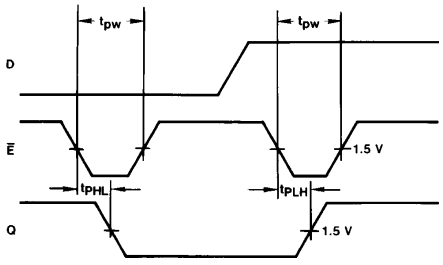

TL/F/6609–3

Other Conditions: C = H, A = Stable

Figure 1

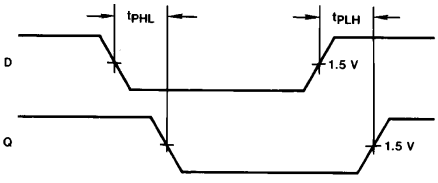

TL/F/6609–4

Other Conditions: $\overline{E}$ = L, $\overline{C}$ = H, A = Stable

Figure 2

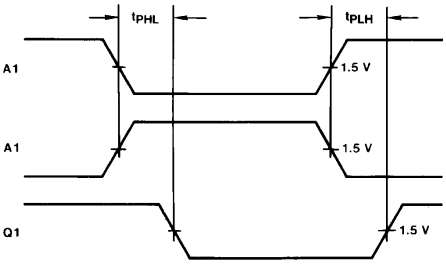

TL/F/6609–5

Other Conditions: $\overline{E}$ = L, $\overline{C}$ = L, D = H

Figure 3

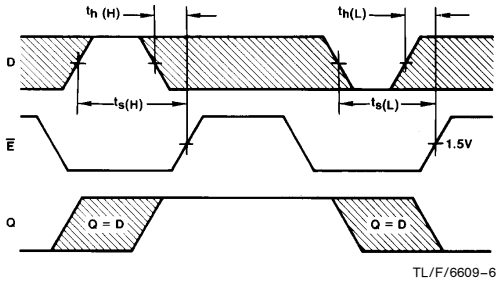

TL/F/6609–6

Other Conditions: C = H, A = Stable

Figure 4

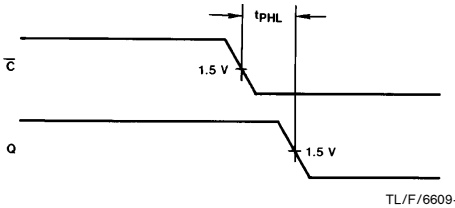

TL/F/6609–7

Other Conditons: $\overline{E}$ = H

Figure 5

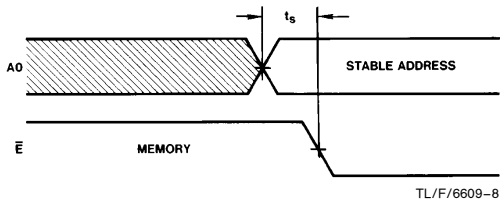

TL/F/6609–8

Other Conditions: $\overline{C}$ = H

Figure 6

Note: The shaded areas indicate when the inputs are permitted to change for predictable output performance.

Physical Dimensions inches (millimeters)

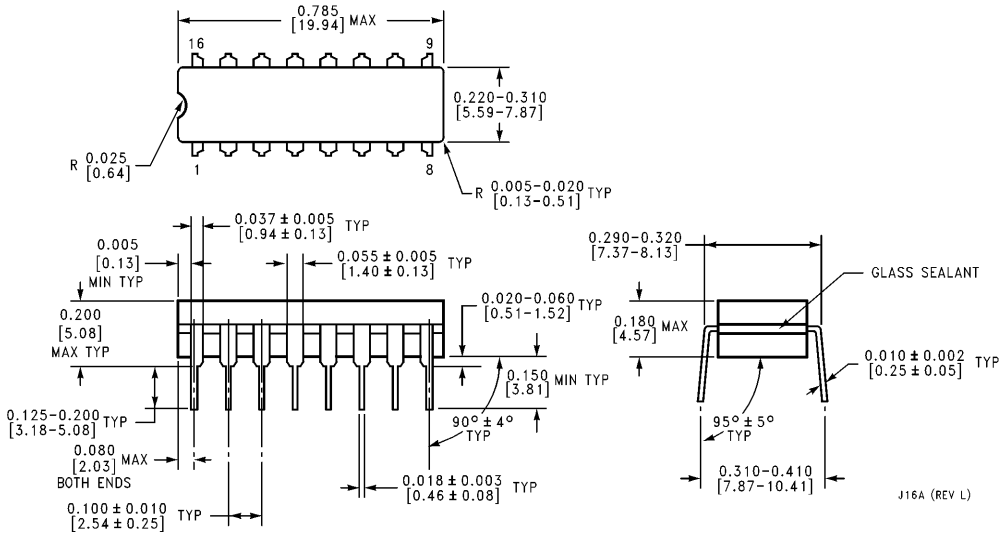

16-Lead Ceramic Dual-In-Line Package (J)
Order Number 9334DMQB or DM9334J
NS Package Number J16A

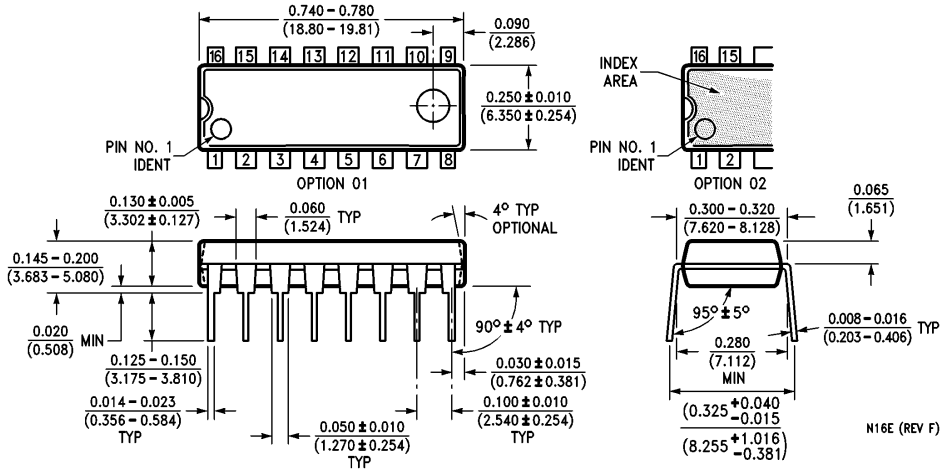

16-Lead Molded Dual-In-Line Package (N)
Order Number DM9334N
NS Package Number N16E

Physical Dimensions inches (millimeters) (Continued)

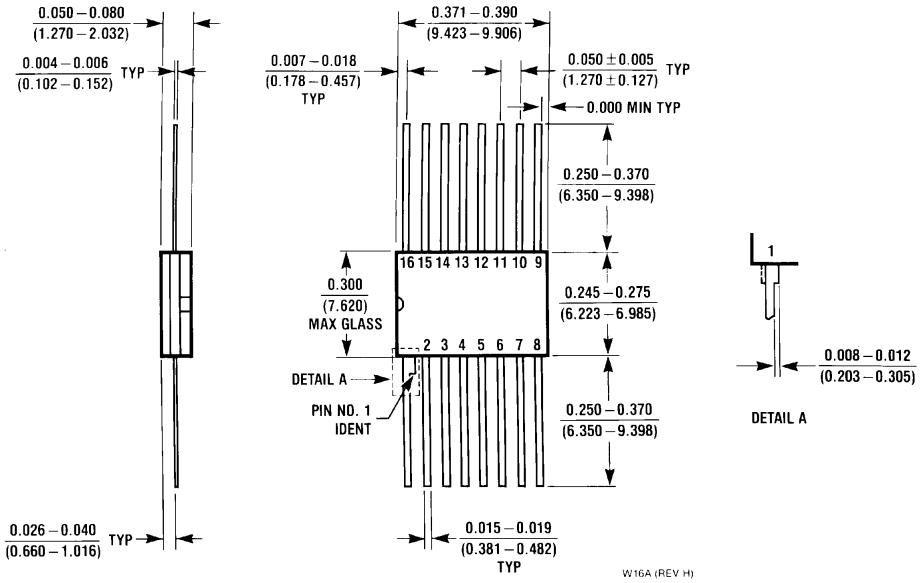

16-Lead Ceramic Flat Package (W)
Order Number 9334FMQB
NS Package Number W16A

LIFE SUPPORT POLICY

NATIONAL'S PRODUCTS ARE NOT AUTHORIZED FOR USE AS CRITICAL COMPONENTS IN LIFE SUPPORT DEVICES OR SYSTEMS WITHOUT THE EXPRESS WRITTEN APPROVAL OF THE PRESIDENT OF NATIONAL SEMICONDUCTOR CORPORATION. As used herein:

1. Life support devices or systems are devices or systems which, (a) are intended for surgical implant into the body, or (b) support or sustain life, and whose failure to perform, when properly used in accordance with instructions for use provided in the labeling, can be reasonably expected to result in a significant injury to the user.
2. A critical component is any component of a life support device or system whose failure to perform can be reasonably expected to cause the failure of the life support device or system, or to affect its safety or effectiveness.

National Semiconductor Corporation
1111 West Bardin Road
Arlington, TX 76017
Tel: 1(800) 272-9959
Fax: 1(800) 737-7018

National Semiconductor Europe
Fax: (+49) 0-180-530 85 86
Email: cnjwge@tevm2.nsc.com
Deutsch Tel: (+49) 0-180-530 85 85
English Tel: (+49) 0-180-532 78 32
Français Tel: (+49) 0-180-532 93 58
Italiano Tel: (+49) 0-180-534 16 80

National Semiconductor Hong Kong Ltd.
13th Floor, Straight Block,
Ocean Centre, 5 Canton Rd.
Tsimshatsui, Kowloon
Hong Kong
Tel: (852) 2737-1600
Fax: (852) 2736-9960

National Semiconductor Japan Ltd.
Tel: 81-043-299-2309
Fax: 81-043-299-2408

National does not assume any responsibility for use of any circuitry described, no circuit patent licenses are implied and National reserves the right at any time without notice to change said circuitry and specifications.