HIGH ENERGY IGNITION CIRCUIT

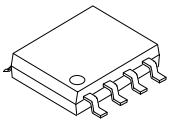

SOP-8

■ DESCRIPTION

This device is designed to use the signal from a reluctor type ignition pickup to produce a well controlled output from a power darlington output transistor.

■ FEATURES

* Very Low Peripheral Component Count
* No Critical System Resistors
* Wide Supply Voltage Operating Range (4.0V ~ 24V)
* Overvoltage Shutdown (30V)
* Dwell Automatically Adjusts to Produce Optimum Stored Energy without Waste
* Externally Adjustable Peak Current
* Transient Protected Inputs and Outputs

■ ORDERING INFORMATION

Ordering Number	Package	Packing
93334G-S08-R	SOP-8	Tape Reel

Note: Pin Assignment: G: Gate D: Drain S: Source

93334G-S08-R (1)Packing Type (2)Package Type (3)Green Package	(1) R: Tape Reel (2) S08: SOP-8 (3) G: Halogen Free and Lead Free

■ MARKING

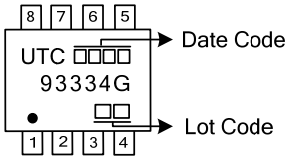

Copyright © 2016 Unisonic Technologies Co., Ltd

■ PIN CONFIGURATION

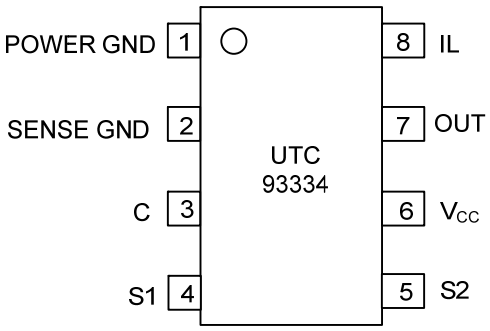

■ BLOCK DIAGRAM AND TYPICAL APPLICATION

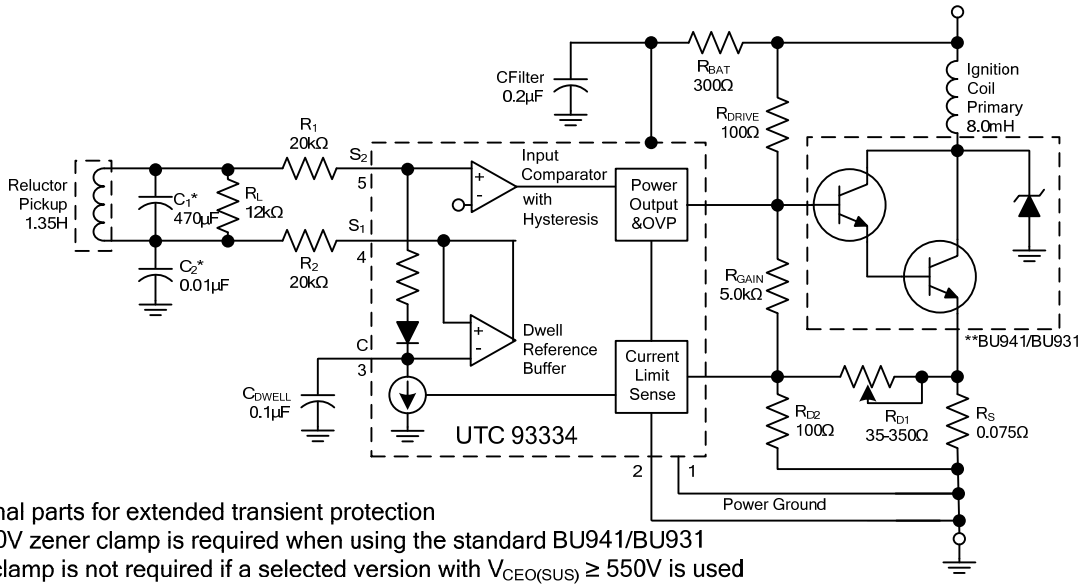

* Optional parts for extended transient protection

** A 350V zener clamp is required when using the standard BU941/BU931
This clamp is not required if a selected version with $V_{CEO(SUS)}$ ≥ 550V is used

Figure 1

Component Values

Pickup	Series resistance = 800Ω±10% @ 25℃, inductance= 1.35H @ 1.0kHz @ 15Vrms
Coil	Leakage L=0.6mH, primary R=0.43Ω±5% @ 25℃, primary L=7.5mH ~ 8.5mH @ 5.0A
R_L	Load resistor for pickup=12KΩ±20%
R_1, R_2	Input buffer resistors provide additional transient protection to the already clamped inputs=20k±20%
C_1, C_2	For reduction of high frequency noise and spark transients induced in pick-up and leads; optional and non-critical
R_{BAT}	Provides load dump protection (but small enough to allow operation at V_{BAT} =4.0V) =300Ω±20%
CFilter	Transient filter on V_{CC}, non-critical
C_{DWELL}	Stores reference, circuit designed for 0.1µF±20%
R_{GAIN}	R_{GAIN}/R_{D1} sets the DC gain of the current regulator =5.0k±20%
R_{D2}	R_{D2}/R_{D1} set up voltage feedback from R_S
R_S	Sense resistor (P_DA_G in thick film techniques) =0.075Ω±30%
R_{DRIVE}	Low enough to supply drive to the output Darlington, high enough to keep $V_{CE(SAT)}$ of the I_C below Darlington turn-on during load dump = 100Ω±20%, 5.0W
R_{D1}	Starting with 35Ω assures less than 5.5A, increasing as required to set 5.5A $R_{D1}=(I_{O(PEAK)}\ R_S - V_{REF})/((V_{REF}/R_{D2})-(1.4/R_{GAIN}))-(\approx 100\Omega)$

■ ABSOLUTE MAXIMUM RATINGS

PARAMETER	SYMBOL	RATINGS	UNIT
Power Supply Voltage-Steady State Transient 300ms or less	V_{CC}	24	V
		90	
Output Sink Current-Steady State Transient 300ms of less	$I_{OUT(SINK)}$	300	mA
		1.0	A
Power Dissipation	P_D	1.05	W
Derate above 25°C		12	mW/°C
Junction Temperature	T_J	+125	°C
Operating Temperature	T_{OPR}	-40~+125	°C
Storage Temperature	T_{STG}	-40 ~ 150	°C

Note: Absolute maximum ratings are those values beyond which the device could be permanently damaged. Absolute maximum ratings are stress ratings only and functional device operation is not implied.

■ ELECTRICAL CHARACTERISTICS (V_{CC} = 13.2V_{DC}, circuit of Figure 3, unless otherwise specified)

PARAMETER	SYMBOL	TEST CONDITIONS	MIN	TYP	MAX	UNIT
Internal Supply Voltage, Pin 6	V_{CC}	V_{BAT} =4.0V_{DC}		3.5		V_{DC}
		V_{BAT} =8.0V_{DC}		7.2		
		V_{BAT} =12.0V_{DC}		10.4		
		V_{BAT} =14.0V_{DC}		11.8		
Ignition Coil Current Peak, Cranking RPM 2.0Hz ~ 27Hz	I_{PEAK}	V_{BAT} =4.0V_{DC}	3.0	3.4		A_{PEAK}
		V_{BAT} =6.0V_{DC}	4.0	5.2		
		V_{BAT} =8.0V_{DC}	4.6	5.3		
		V_{BAT} =10.0V_{DC}	5.1	5.4		
Ignition Coil Current Peak, Normal RPM	I_{PEAK}	F=33Hz	5.1	5.5		A_{PEAK}
		F=133Hz	5.1	5.5		
		F=200Hz	4.2	5.4		
		F=267Hz	3.4	4.4		
		F=333Hz	2.7	3.4		
Ignition Coil On-Time, Normal RPM Range	T_{ON}	F=33Hz		7.5	14.0	ms
		F=133Hz		5.0	5.9	
		F=200Hz		4.0	4.6	
		F=267Hz		3.0	3.6	
		F=333Hz		2.3	2.8	
Shutdown Voltage	V_{BAT}		25	30	35	V_{DC}
Input Threshold (Static Test)	V_{THR}	Turn-on		360		mV_{DC}
		Turn-off		90		
Input Threshold Hysteresis	V_{HYS}		75			mV_{DC}
Input Threshold (Active Operation)	V_{THR}	Turn-on		1.8		V_{DC}
		Turn-off		1.5		
Total Circuit Lag from ts (Figure 1) until Ignition Coil Current Falls to 10%				60	120	μs
Ignition Coil Current Fall Time (90% ~ 10%)				4.0		μs
Saturation Voltage IC Output (Pin 7) (R_{DRIVE} = 100Ω)	$V_{CE(SAT)}$	V_{BAT} =10V_{DC}		120		mV_{DC}
		V_{BAT} =30V_{DC}		280		
		V_{BAT} =50V_{DC}		540		
Current Limit Reference, Pin 8	V_{REF}		120	160	190	mV_{DC}

■ IGNITION COIL CURRENT VS. FREQUENCY / PERIOD

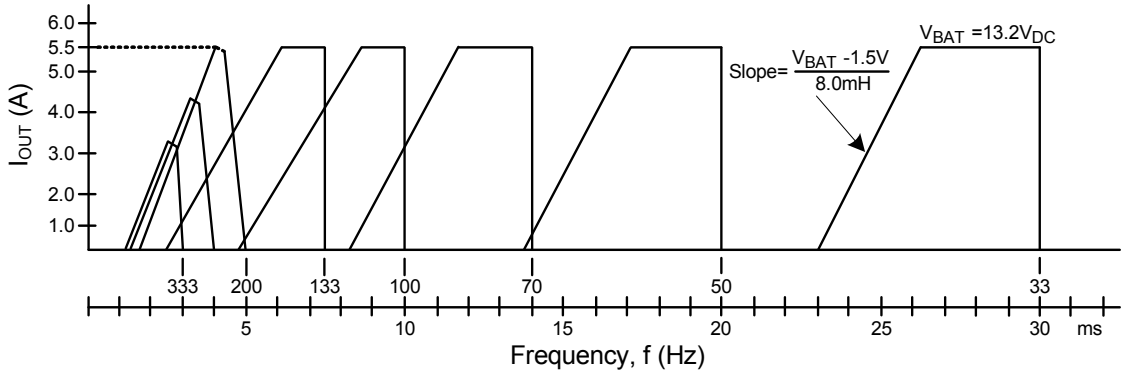

UTC assumes no responsibility for equipment failures that result from using products at values that exceed, even momentarily, rated values (such as maximum ratings, operating condition ranges, or other parameters) listed in products specifications of any and all UTC products described or contained herein. UTC products are not designed for use in life support appliances, devices or systems where malfunction of these products can be reasonably expected to result in personal injury. Reproduction in whole or in part is prohibited without the prior written consent of the copyright owner. The information presented in this document does not form part of any quotation or contract, is believed to be accurate and reliable and may be changed without notice.