National Semiconductor

June 1989

9324/DM9324 5-Bit Comparator

General Description

The 9324 expandable comparators provide comparison between two 5-bit words and give three outputs—"less than", "greater than" and "equal to". A HIGH on the active LOW Enable Input forces all three outputs LOW.

Connection Diagram

Dual-In-Line Package

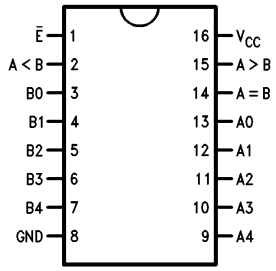

TL/F/9792–1

Order Number 9324DMQB, 9324FMQB, or DM9324N
See NS Package Number J16A, N16E or W16A

Pin Names	Description
$\overline{E}$	Enable Input (Active LOW)
A0–A4	Word A Parallel Inputs
B0–B4	Word B Parallel Inputs
A < B	A Less than B Output (Active HIGH)
A > B	A Greater than B Output (Active HIGH)
A = B	A Equal to B Output (Active HIGH)

©1995 National Semiconductor Corporation

RRD-B30M115/Printed in U. S. A.

Absolute Maximum Ratings (Note)

If Military/Aerospace specified devices are required, please contact the National Semiconductor Sales Office/Distributors for availability and specifications.

Supply Voltage	7V
Input Voltage	5.5V
Operating Free Air Temperature Range	
Military	−55°C to +125°C
Commercial	0°C to +70°C
Storage Temperature Range	−65°C to +150°C

Note: *The "Absolute Maximum Ratings" are those values beyond which the safety of the device cannot be guaranteed. The device should not be operated at these limits. The parametric values defined in the "Electrical Characteristics" table are not guaranteed at the absolute maximum ratings. The "Recommended Operating Conditions" table will define the conditions for actual device operation.*

Recommended Operating Conditions

Symbol	Parameter	Military			Commercial			Units
		Min	Nom	Max	Min	Nom	Max	
V_{CC}	Supply Voltage	4.5	5	5.5	4.75	5	5.25	V
V_{IH}	High Level Input Voltage	2			2			V
V_{IL}	Low Level Input Voltage			0.8			0.8	V
I_{OH}	High Level Output Current			−0.8			−0.8	mA
I_{OL}	Low Level Output Current			16			16	mA
T_A	Free Air Operating Temperature	−55		125	0		70	°C

Electrical Characteristics Over recommended operating free air temperature range (unless otherwise noted)

Symbol	Parameter	Conditions		Min	Typ (Note 1)	Max	Units
V_I	Input Clamp Voltage	V_{CC} = Min, I_I = −12 mA				−1.5	V
V_{OH}	High Level Output Voltage	V_{CC} = Min, I_{OH} = Max V_{IL} = Max		2.4	3.4		V
V_{OL}	Low Level Output Voltage	V_{CC} = Min, I_{OL} = Max V_{IH} = Min			0.2	0.4	V
I_I	Input Current @ Max Input Voltage	V_{CC} = Max, V_I = 5.5V				1	mA
I_{IH}	High Level Input Current	V_{CC} = Max, V_I = 2.4V				80	μA
I_{IL}	Low Level Input Current	V_{CC} = Max, V_I = 0.4V				−3.2	mA
I_{OS}	Short Circuit Output Current	V_{CC} = Max (Note 2)	MIL	−20		−70	mA
			COM	−20		−70	
I_{CC}	Supply Current	V_{CC} = Max				81	mA

Note 1: All typicals are at V_{CC} = 5V, T_A = 25°C.

Note 2: Not more than one output should be shorted at a time.

Switching Characteristics

V_{CC} = +5.0V, T_A = +25°C (See Section 1 for waveforms and load configurations)

Symbol	Parameter	C_L = 15 pF		Units
		Min	Max	
t_{PLH} t_{PHL}	Propagation Delay $\overline{E}$ to A = B		14 14	ns
t_{PLH} t_{PHL}	Propagation Delay A_n, B_n to A > B		25 22	ns
t_{PLH} t_{PHL}	Propagation Delay A_n, B_n to A < B		26 21	ns
t_{PLH} t_{PHL}	Propagation Delay A_n, B_n to A = B		30 32	ns

Functional Description

The '24 5-bit comparators use combinational circuitry to directly generate "A greater than B" and "A less than B" outputs. As evident from the logic diagram, these outputs are generated in only three gate delays. The "A equals B" output is generated in one additional gate delay by decoding the "A neither less than nor greater than B" condition with a NOR gate. All three outputs are activated by the active LOW Enable Input ($\overline{E}$).

Tying the A > B output from one device into an A input on another device and the A < B output into the corresponding B input permits easy expansion.

The A4 and B4 inputs are the most significant inputs and A0, B0 the least significant. Thus if A4 is HIGH and B4 is LOW, the A > B output will be HIGH regardless of all other inputs except $\overline{E}$.

Truth Table

Inputs			Outputs		
$\overline{E}$	A_n	B_n	A < B	A > B	A = B
H	X	X	L	L	L
L	Word A = Word B		L	L	H
L	Word A > Word B		L	H	L
L	Word B > Word A		H	L	L

H = HIGH Voltage Level
L = LOW Voltage Level
X = Immaterial

Logic Symbol

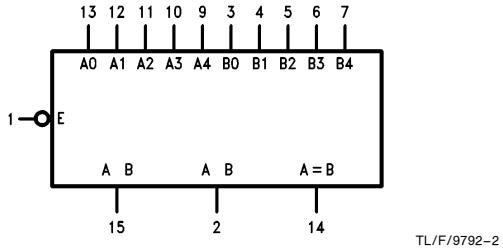

TL/F/9792–2

V_{CC} = Pin 16
GND = Pin 6

Logic Diagram

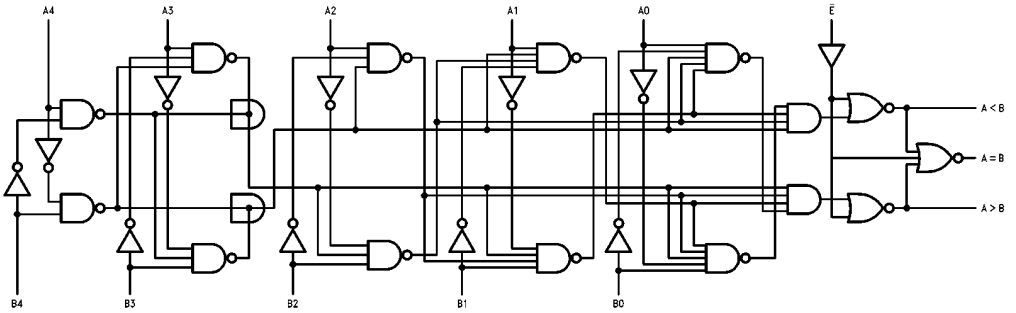

TL/F/9792–3

Physical Dimensions inches (millimeters)

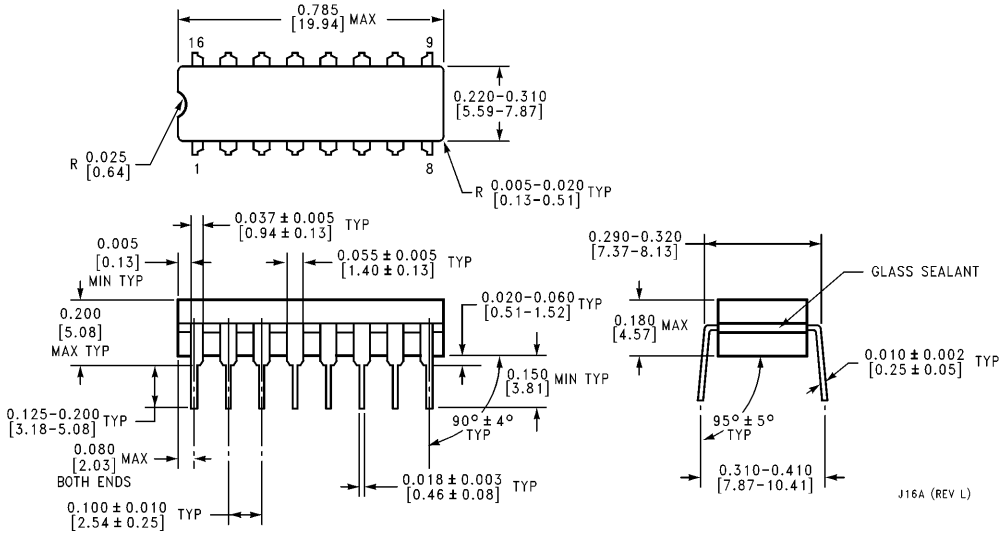

16-Lead Ceramic Dual-In-Line Package (J)
Order Number 9324DMQB
NS Package Number J16A

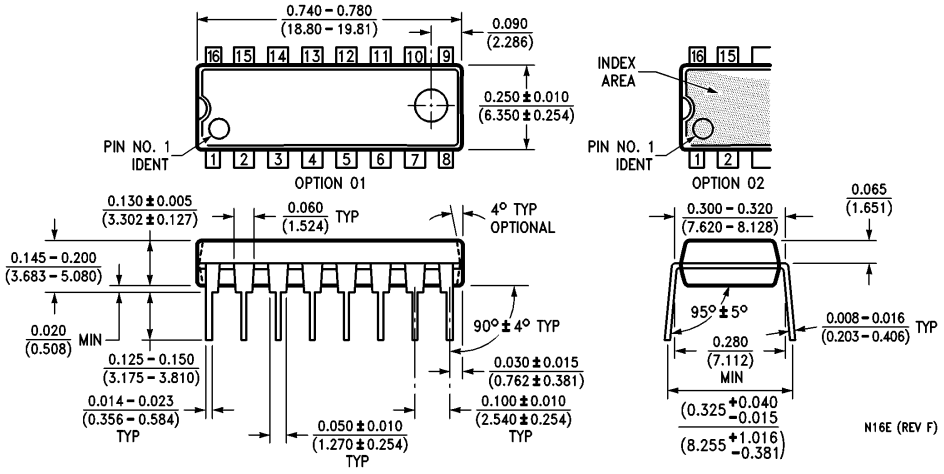

16-Lead Molded Dual-In-Line Package (N)
Order Number DM9324N
NS Package Number N16E

Physical Dimensions inches (millimeters) (Continued)

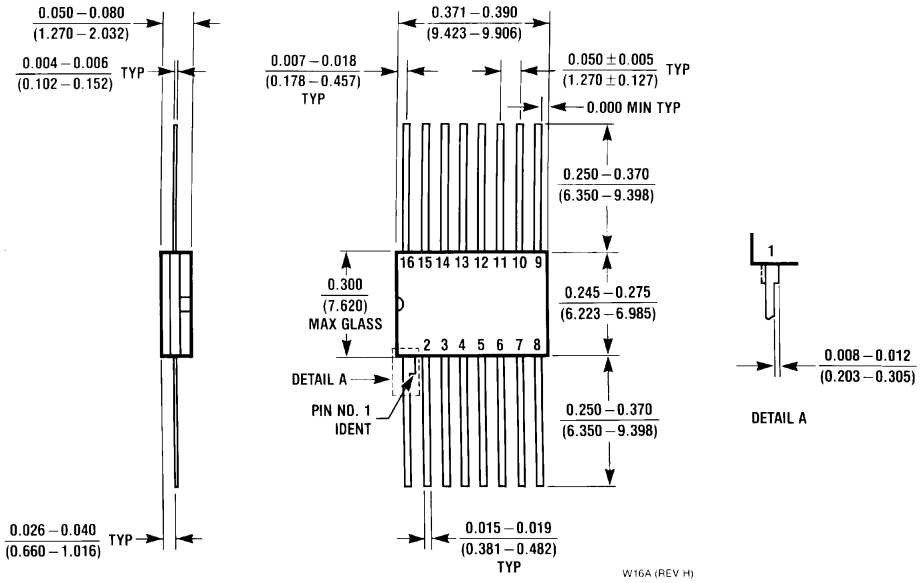

16-Lead Ceramic Flat Package (W)
Order Number 9324FMQB
NS Package Number W16A

LIFE SUPPORT POLICY

NATIONAL'S PRODUCTS ARE NOT AUTHORIZED FOR USE AS CRITICAL COMPONENTS IN LIFE SUPPORT DEVICES OR SYSTEMS WITHOUT THE EXPRESS WRITTEN APPROVAL OF THE PRESIDENT OF NATIONAL SEMICONDUCTOR CORPORATION. As used herein:

1. Life support devices or systems are devices or systems which, (a) are intended for surgical implant into the body, or (b) support or sustain life, and whose failure to perform, when properly used in accordance with instructions for use provided in the labeling, can be reasonably expected to result in a significant injury to the user.
2. A critical component is any component of a life support device or system whose failure to perform can be reasonably expected to cause the failure of the life support device or system, or to affect its safety or effectiveness.

National Semiconductor Corporation
1111 West Bardin Road
Arlington, TX 76017
Tel: 1(800) 272-9959
Fax: 1(800) 737-7018

National Semiconductor Europe
Fax: (+49) 0-180-530 85 86
Email: cnjwge@tevm2.nsc.com
Deutsch Tel: (+49) 0-180-530 85 85
English Tel: (+49) 0-180-532 78 32
Français Tel: (+49) 0-180-532 93 58
Italiano Tel: (+49) 0-180-534 16 80

National Semiconductor Hong Kong Ltd.
13th Floor, Straight Block,
Ocean Centre, 5 Canton Rd.
Tsimshatsui, Kowloon
Hong Kong
Tel: (852) 2737-1600
Fax: (852) 2736-9960

National Semiconductor Japan Ltd.
Tel: 81-043-299-2309
Fax: 81-043-299-2408

National does not assume any responsibility for use of any circuitry described, no circuit patent licenses are implied and National reserves the right at any time without notice to change said circuitry and specifications.