This document was generated on 05/13/2010

PLEASE CHECK WWW.MOLEX.COM FOR LATEST PART INFORMATION

Part Number: 0399300317

Status: Active

Description: 3.81mm (.150") Pitch Beau™ EuroMate™ Pluggable PCB Terminal Block, Dual Level, 270° Wire Entry, 17 Circuits

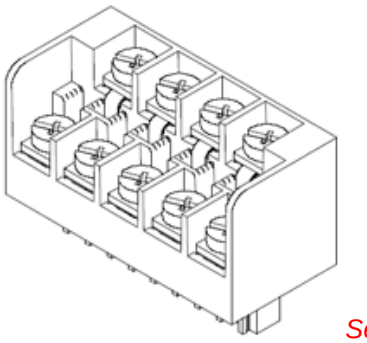

Series image - Reference only

Documents:

Drawing (PDF)

RoHS Certificate of Compliance (PDF)

Agency Certification

UL	E48521

General

Product Family	Terminal Blocks
Series	39930
Application	Wire-to-Board
Component Type	Plug
Product Literature Order No	USA-264
Product Name	EuroMate™Pluggable
Type	Euro Block

Physical

Circuits (Loaded)	17
Color - Resin	Black
Entry Angle	Horizontal
Flammability	94V-0
Lock to Mating Part	None
Material - Plating Mating	Tin
Material - Plating Termination	Tin
Material - Resin	Nylon
Number of Rows	2
Orientation	Vertical
Panel Mount	No
Pitch - Mating Interface (in)	0.150 In
Pitch - Mating Interface (mm)	3.81 mm
Polarized to Mating Part	Yes
Stackable	No
Temperature Range - Operating	130°C
Termination Interface: Style	Screw or Lug
Wire Size AWG	14, 16, 18, 20, 22
Wire Size mm²	0.50 - 1.50

Electrical

Current - Maximum per Contact	12A
Voltage - Maximum	300V

Material Info

Old Part Number	930917

Reference - Drawing Numbers

Sales Drawing	SD-39930-004

EU RoHS
ELV and RoHS Compliant
REACH SVHC
Not Reviewed
Halogen-Free Status
Not Reviewed

China RoHS

Need more information on product environmental compliance?

Email productcompliance@molex.com
For a multiple part number RoHS Certificate of Compliance, click here

Please visit the Contact Us section for any non-product compliance questions.

Search Parts in this Series
39930Series

Mates With
39511-1017 , 39512-1017

This document was generated on 05/13/2010

PLEASE CHECK WWW.MOLEX.COM FOR LATEST PART INFORMATION

SD-39930-004

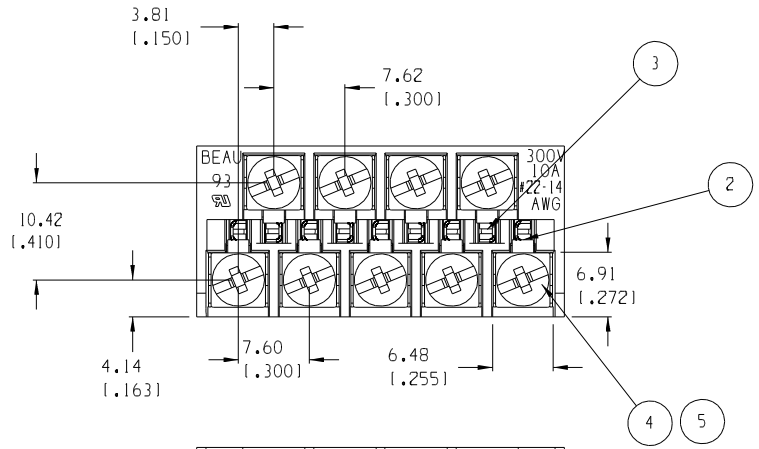

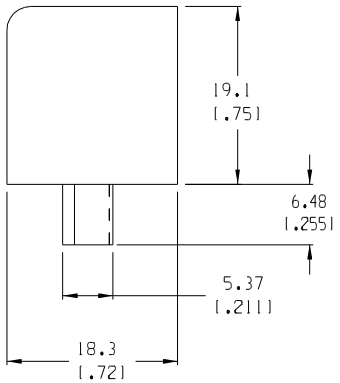

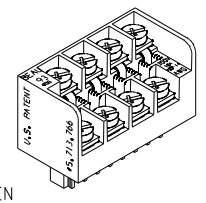

EVEN CIRCUITS, FWE

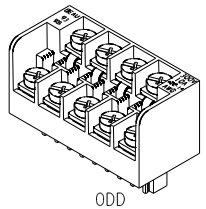

ODD CIRCUITS, FWE

ISO VIEW SCALE 1:1

NUMBER OF CIRCUITS	"A" DIM.	"B" DIM.	MATERIAL NUMBER
03	16.51 [.650]	7.62 [.300]	399300303
04	20.32 [.800]	11.43 [.450]	399300304
05	24.13 [.950]	15.24 [.600]	399300305
06	27.94 [1.100]	19.05 [.750]	399300306
07	31.75 [1.250]	22.86 [.900]	399300307
08	35.56 [1.400]	26.67 [1.050]	399300308
09	39.37 [1.550]	30.48 [1.200]	399300309
10	43.18 [1.700]	34.29 [1.350]	399300310
11	46.99 [1.850]	38.10 [1.500]	399300311
12	50.80 [2.000]	41.91 [1.650]	399300312
13	54.61 [2.150]	45.72 [1.800]	399300313
14	58.42 [2.300]	49.53 [1.950]	399300314
15	62.23 [2.450]	53.34 [2.100]	399300315
16	66.04 [2.600]	57.15 [2.250]	399300316
17	69.85 [2.750]	60.96 [2.400]	399300317
18	73.66 [2.900]	64.77 [2.550]	399300318
19	77.47 [3.050]	68.58 [2.700]	399300319
20	81.28 [3.200]	72.39 [2.850]	399300320
21	85.09 [3.350]	76.20 [3.000]	399300321

NOTES:

1. MATERIAL: SEE TABLE
2. FINISHES: SEE TABLE
3. PRODUCT SPECIFICATION: NOT REQUIRED
4. INCH DIMS ARE SHOWN IN PARENTHESIS (XXX)
5. "XX" REFERS TO THE NUMBER OF CIRCUITS
6. MATES WITH 3.81MM HEADERS

ITEM	QTY. (EVEN NO. OF CIRCUITS)	QTY. (ODD NO. OF CIRCUITS)	DESCRIPTION	MATERIAL	FINISH
5	"XX"	"XX"	SCREW M3 SQUARE WASHER	STEEL	ZINC CHROMATE
4	"XX"	"XX"	NUT HEX M3	STEEL	ZINC CHROMATE
3	XX/2	(XX-1)/2	TERMINAL LONG	COPPER	TIN
2	XX/2	(XX+1)/2	TERMINAL SHORT	COPPER	TIN
1	1	1	BODY FWE 3.81	THERMOPLASTIC	BLACK

EC NO. 11648 DRWN: RK 8-23-05 CH'K: APPR:

REV B

DESCRIPTION

QUALITY SYMBOLS
MAJOR
CRITICAL (C)
SPC (S)

GENERAL TOLERANCES: (UNLESS SPECIFIED)

	mm	INCH
4 PLACES		±.0015
3 PLACES	±.038	±.005
2 PLACES	±.13	±.01
1 PLACE	±.3	
ANGULAR:	±2°	

DRAFT WHERE APPLICABLE MUST REMAIN WITHIN DIMENSIONS

SCALE 2:1
DESIGN UNITS ☐ mm ☒ INCH
THIRD ANGLE PROJECTION
PROJECT NO. -
DIMENSIONS: ☒ mm/INCH ☐ INCH/mm ☐ mm ONLY
SHT - REV -
REVISE ON CAD ONLY

DRAWN BY & DATE J.FARMER 12-02-04
CHECKED BY & DATE R. KEMP 12-02-04
APPROVED BY & DATE GHR 12-02-04
CAD FILENAME 9309XX.PRT

TITLE: PLUG, FWE, 3.81MM EUROMATE ASY -C

MOLEX INCORPORATED

MATERIAL NO. SEE CHART
DRAWING NO. SD-39930-004
SHEET NO. 1 OF 1
SIZE B

THIS DRAWING CONTAINS INFORMATION THAT IS PROPRIETARY TO MOLEX INCORPORATED AND SHOULD NOT BE USED WITHOUT WRITTEN PERMISSION.