National Semiconductor

9301/DM9301
1-of-10 Decoders

General Description

These BCD-to-decimal decoders consist of eight inverters and ten 4-input NAND gates. The inverters are connected in pairs to make BCD input data available for decoding by the NAND gates. Full decoding of valid input logic ensures that all outputs remain "OFF" for all invalid input conditions.

These circuits provide familiar TTL inputs and outputs which are compatible for use with other TTL and DTL circuits. DC noise margins are typically 1V and power dissipation is typically 125 mW. The diode-clamped, buffered inputs represent only one normalized Series 54/74 load.

Features

- Direct replacement for Signetics 8252
- Diode-clamped inputs
- All outputs are high for invalid BCD input conditions
- Typical power dissipation 125 mW
- Typical propagation delay 20 ns

Connection Diagram

Dual-In-Line Package

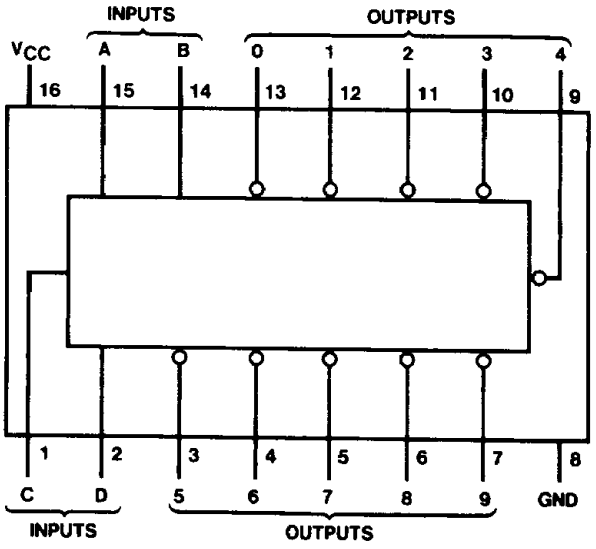

TL/F/6601–1

Order Number 9301DMQB, 9301FMQB or DM9301N
See NS Package Number J16A, N16E or W16A

Function Table

No.	BCD Inputs				Decimal Outputs									
	D	C	B	A	0	1	2	3	4	5	6	7	8	9
0	L	L	L	L	L	H	H	H	H	H	H	H	H	H
1	L	L	L	H	H	L	H	H	H	H	H	H	H	H
2	L	L	H	L	H	H	L	H	H	H	H	H	H	H
3	L	L	H	H	H	H	H	L	H	H	H	H	H	H
4	L	H	L	L	H	H	H	H	L	H	H	H	H	H
5	L	H	L	H	H	H	H	H	H	L	H	H	H	H
6	L	H	H	L	H	H	H	H	H	H	L	H	H	H
7	L	H	H	H	H	H	H	H	H	H	H	L	H	H
8	H	L	L	L	H	H	H	H	H	H	H	H	L	H
9	H	L	L	H	H	H	H	H	H	H	H	H	H	L
INVALID	H	L	H	L	H	H	H	H	H	H	H	H	H	H
	H	L	H	H	H	H	H	H	H	H	H	H	H	H
	H	H	L	L	H	H	H	H	H	H	H	H	H	H
	H	H	L	H	H	H	H	H	H	H	H	H	H	H
	H	H	H	L	H	H	H	H	H	H	H	H	H	H
	H	H	H	H	H	H	H	H	H	H	H	H	H	H

4

Absolute Maximum Ratings (Note)

If Military/Aerospace specified devices are required, please contact the National Semiconductor Sales Office/Distributors for availability and specifications.

Supply Voltage	7V
Input Voltage	5.5V
Operating Free Air Temperature Range	
Military	−55°C to +125°C
Commercial	0°C to 70°C
Storage Temperature Range	−65°C to +150°C

Note: *The "Absolute Maximum Ratings" are those values beyond which the safety of the device cannot be guaranteed. The device should not be operated at these limits. The parametric values defined in the "Electrical Characteristics" table are not guaranteed at the absolute maximum ratings. The "Recommended Operating Conditions" table will define the conditions for actual device operation.*

Recommended Operating Conditions

Symbol	Parameter	Military			Commercial			Units
		Min	Nom	Max	Min	Nom	Max	
V_{CC}	Supply Voltage	4.5	5	5.5	4.75	5	5.25	V
V_{IH}	High Level Input Voltage	2			2			V
V_{IL}	Low Level Input Voltage			0.8			0.8	V
I_{OH}	High Level Output Current			−0.8			−0.8	mA
I_{OL}	Low Level Output Current			16			16	mA
T_A	Free Air Operating Temperature	−55		125	0		70	°C

Electrical Characteristics over recommended operating free air temperature range (unless otherwise noted)

Symbol	Parameter	Conditions		Min	Typ (Note 1)	Max	Units
V_I	Input Clamp Voltage	V_{CC} = Min, I_I = −12 mA				−1.5	V
V_{OH}	High Level Output Voltage	V_{CC} = Min, I_{OH} = Max V_{IL} = Max, V_{IH} = Min		2.4			V
V_{OL}	Low Level Output Voltage	V_{CC} = Min, I_{OL} = Max V_{IH} = Min, V_{IL} = Max				0.4	V
I_I	Input Current @ Max Input Voltage	V_{CC} = Max, V_I = 5.5V				1	mA
I_{IH}	High Level Input Current	V_{CC} = Max, V_I = 2.4V				40	μA
I_{IL}	Low Level Input Current	V_{CC} = Max, V_I = 0.4V				−1.6	mA
I_{OS}	Short Circuit Output Current	V_{CC} = Max (Note 2)	MIL	−20		−70	mA
			COM	−20		−55	
I_{CC}	Supply Current	V_{CC} = Max (Note 3)	MIL			44	mA
			COM		25	41	

Switching Characteristics at V_{CC} = 5V and T_A = 25°C (See Section 1 for Test Waveforms and Output Load)

Symbol	Parameter	Conditions	Military		Commercial		Units
			Min	Max	Min	Max	
t_{PLH}	Propagation Delay Time Low to High Level Output	C_L = 15 pF R_L = 400Ω		35		30	ns
t_{PHL}	Propagation Delay Time High to Low Level Output			30		30	ns

Note 1: All typicals are at V_{CC} = 5V, T_A = 25°C.

Note 2: Not more than one output should be shorted at a time.

Note 3: I_{CC} is measured with the outputs open and all inputs grounded.

Logic Diagram

9301

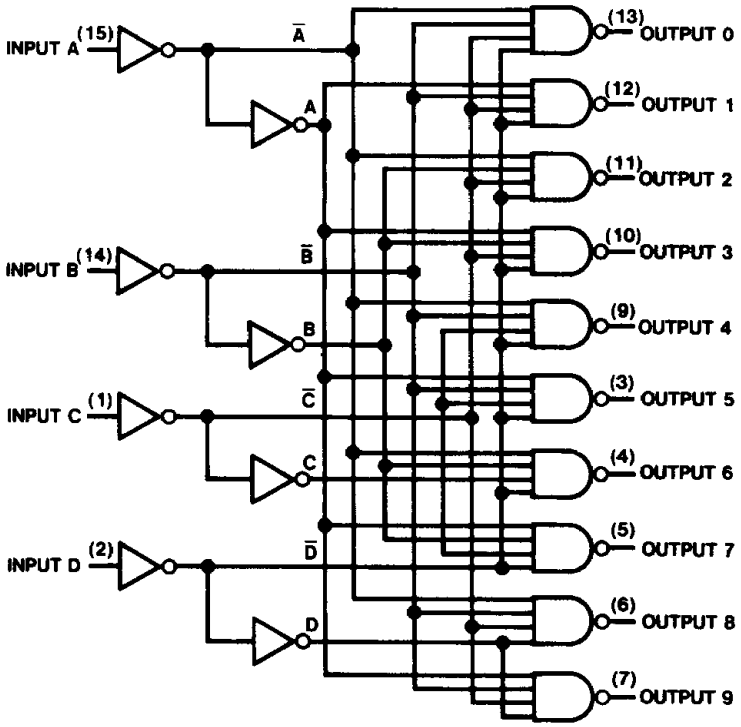

TL/F/6601-2