This document was generated on 05/27/2010

PLEASE CHECK WWW.MOLEX.COM FOR LATEST PART INFORMATION

Part Number: 0917912001
Status: Active
Overview: rast_5_connector_system
Description: 5.00mm (.197") Pitch Appli-Mate® RAST Power IDT Housing, 10 Amp, Indirect, Female, 4 Circuits, Fully Coded, Open End Walls, No Polarizing Rib, Glow Wire Compatible

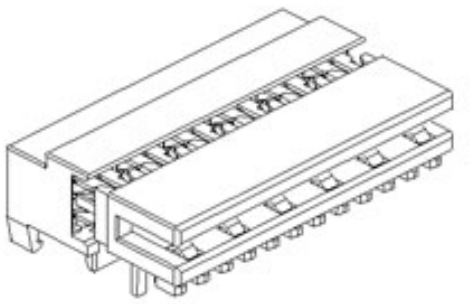

Series image - Reference only

Documents:

- 3D Model
- Drawing (PDF)
- Product Specification PS-91627-001 (PDF)
- RoHS Certificate of Compliance (PDF)

General

Product Family	IDT and Solder Connectors
Series	91627
Crimp Quality Equipment	Yes
Overview	rast_5_connector_system
Product Name	RAST 5
Use With	RAST standard interface

Physical

Circuits (Loaded)	4
Circuits (maximum)	4
Color - Resin	Natural (White)
Durability (mating cycles max)	10
Gender	Female
Glow-Wire Compliant	Yes
Lock to Mating Part	Yes
Material - Metal	High Performance Alloy (HPA)
Material - Plating Mating	Tin
Material - Plating Termination	Silver
Material - Resin	Nylon
Number of Rows	1
Packaging Type	Tray
Panel Mount	No
Pitch - Mating Interface (in)	0.197 In
Pitch - Mating Interface (mm)	5.00 mm
Pitch - Term. Interface (in)	0.197 In
Pitch - Term. Interface (mm)	5.00 mm
Plating min: Mating (µin)	32
Plating min: Mating (µm)	0.80
Plating min: Termination (µin)	32
Plating min: Termination (µm)	0.80
Polarized to Mating Part	No
Stackable	No
Temperature Range - Operating	-40°C to +120°C
Termination Interface: Style	IDT or Pierce
Wire Size AWG	22, 24

Electrical

Current - Maximum per Contact	10A
Voltage - Maximum	250V AC

Material Info

Reference - Drawing Numbers

Application Specification	AS-91627-001
Packaging Specification	PK-91627-001

EU RoHS
ELV and RoHS Compliant
REACH SVHC
Not Reviewed
Halogen-Free Status
Not Reviewed

China RoHS

Need more information on product environmental compliance?

Email productcompliance@molex.com
For a multiple part number RoHS Certificate of Compliance, click here

Please visit the Contact Us section for any non-product compliance questions.

Search Parts in this Series
91627Series

Mates With
90860 Appli-Mate® Vertical Header. 90861 Appli-Mate® Right Angle Header

Application Tooling | **FAQ**

Tooling specifications and manuals are found by selecting the products below. Crimp Height Specifications are then contained in the Application Tooling Specification document.

Global

Description	Product #
Appli-Mate Rast 2.5 Power Manual Terminator	0622030000
RAST 2.5 Semi-Automatic Terminator Machine For Appli-Mate™ Connectors	0623006000

Product Specification	PS-91627-001
Sales Drawing	SD-91791-001

This document was generated on 05/27/2010

PLEASE CHECK WWW.MOLEX.COM FOR LATEST PART INFORMATION

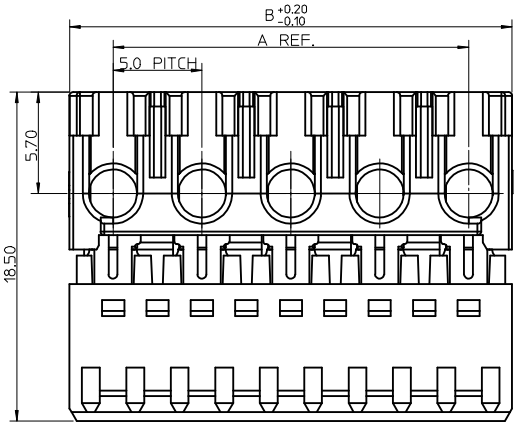

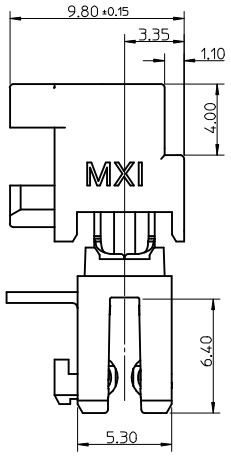

CKT	DIM A	DIM B
2	5	9.9
3	10	14.9
4	15	19.9
5	20	24.9
6	25	29.9
7	30	34.9
8	35	39.9
9	40	44.9
10	45	49.9
11	50	54.9
12	55	59.9

NOTES:
1. MATERIAL: HOUSING: PA 6
   TERMINAL: COPPER ALLOY
   PLATING: SILVER (10A)
2. PRODUCT SPECIFICATION: PS-91627-001
3. SEE SUBSEQUENT SHEETS FOR PART NUMBERING INFORMATION
4. THIS CONNECTOR MATES WITH HEADER ONLY. SEE PRODUCT SPECIFICATION PS-91627-001 FOR APPROVED HEADERS
5. CABLE:
   - RECOMMENDED CABLE CROSS SECTIONAL AREA = 0.50mm.sq TO 0.75mm.sq
   - MAX CABLE INSULATION DIAMETER = 2.5mm
6. PACKAGING SPECIFICATION: PK-91627-001
7. APPLICATION SPECIFICATION: AS-91627-001

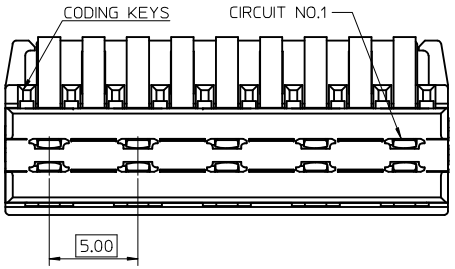

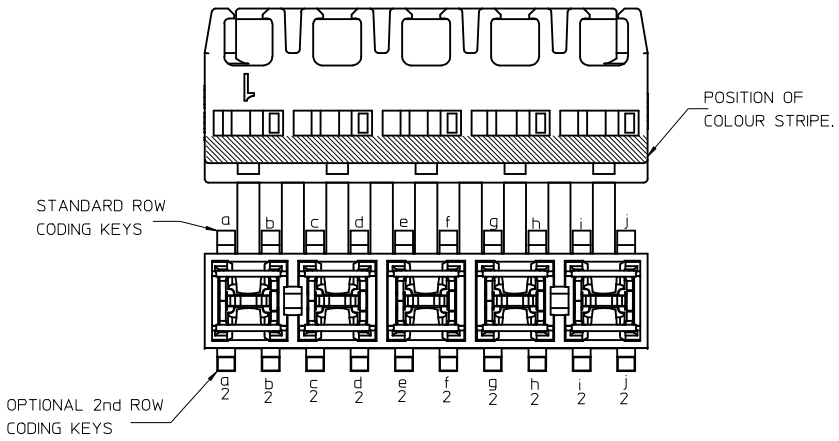

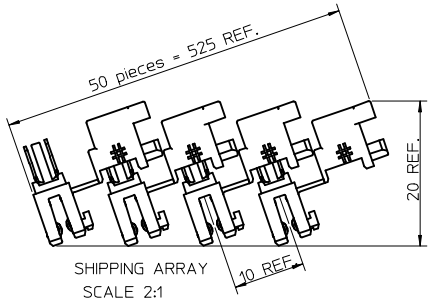

REVIEWED
EC NO: E2010-0095
DRWN:TTOURISH 2009/09/04
CHKD:BRUTTLE 2009/09/04
APPR:BMAGUIRE 2009/09/07
DESCRIPTION
H
REV

QUALITY SYMBOLS
▼=0
▽=0

GENERAL TOLERANCES (UNLESS SPECIFIED)

	mm	INCH
4 PLACES	± ---	± ---
3 PLACES	± 0.10	± ---
2 PLACES	± 0.10	± ---
1 PLACE	± 0.2	± ---
ANGULAR ± 2 °		

DRAFT WHERE APPLICABLE MUST REMAIN WITHIN DIMENSIONS

DIMENSION STYLE: MM ONLY
SCALE: 5:1
DESIGN UNITS: METRIC
THIRD ANGLE PROJECTION

DRAWN BY	LKIERNAN	DATE 07/05/2003
CHECKED BY	BMAGUIRE	DATE 25/07/2003
APPROVED BY	BMAGUIRE	DATE 25/07/03

TITLE: 10A RAST PWR IDT CONN 5MM PTCH

MOLEX INCORPORATED

MATERIAL NO.: SEE CHARTS
DOCUMENT NO.: SD-91791-001
SHEET NO.: 1 OF 2
SIZE: A2

THIS DRAWING CONTAINS INFORMATION THAT IS PROPRIETARY TO MOLEX INCORPORATED AND SHOULD NOT BE USED WITHOUT WRITTEN PERMISSION

2 CIRCUIT

MOLEX PART NO.	TERMINAL VOID POSITION	REMOVED CODING KEYS	CONFIGURATION	COLOUR STRIPE
91791-0001	NONE	NONE	1 2	NONE

3 CIRCUIT

MOLEX PART NO.	TERMINAL VOID POSITION	REMOVED CODING KEYS	CONFIGURATION	LATCH BETWEEN	POLARIZING RIB BETWEEN	COLOUR STRIPE
91791-1001	NONE	NONE	1 2 3	NONE	NONE	NONE
91791-1002	NONE	a b c	a b c 1 2 3	NONE	CCT 1&2	RED
91791-1004	NONE	NONE	1 2 3	NONE	CCT 1&2	RED
91791-1504	NONE	a b c	a b c 1 2 3	CCT 1&2	CCT 2&3	RED
91791-1003	NONE	b c d e f b2 c2 d2 e2	b c d e f 1 2 3 b c d e 2 2 2 2	NONE	NONE	NONE

4 CIRCUIT

MOLEX PART NO.	TERMINAL VOID POSITION	REMOVED CODING KEYS	CONFIGURATION	LATCH BETWEEN	POLARIZING RIB BETWEEN	COLOUR STRIPE
91791-2001	NONE	NONE	1 2 3 4	NONE	NONE	NONE
91791-2004	NONE	b d e f g h	b d e f g h 1 2 3 4	NONE	CCT 2&3	RED

5 CIRCUIT

MOLEX PART NO.	TERMINAL VOID POSITION	REMOVED CODING KEYS	CONFIGURATION	COLOUR STRIPE
91791-3001	NONE	NONE	1 2 3 4 5	NONE

6 CIRCUIT

MOLEX PART NO.	TERMINAL VOID POSITION	REMOVED CODING KEYS	CONFIGURATION	COLOUR STRIPE
91791-4001	NONE	NONE	1 2 3 4 5 6	NONE
91791-4002	NONE	a b c d e f i j k l + b2 c2 d2 e2 f2 g2 h2 i2 j2 k2	a b c d e f i j k l 1 2 3 4 5 6 b c d e f g h i j k 2 2 2 2 2 2 2 2 2	NONE

7 CIRCUIT

MOLEX PART NO.	TERMINAL VOID POSITION	REMOVED CODING KEYS	CONFIGURATION	COLOUR STRIPE
91791-5001	NONE	NONE	1 2 3 4 5 6 7	NONE

8 CIRCUIT

MOLEX PART NO.	TERMINAL VOID POSITION	REMOVED CODING KEYS	CONFIGURATION	COLOUR STRIPE
91791-6001	NONE	NONE	1 2 3 4 5 6 7 8	NONE

9 CIRCUIT

MOLEX PART NO.	TERMINAL VOID POSITION	REMOVED CODING KEYS	CONFIGURATION	COLOUR STRIPE
91791-7001	NONE	NONE	1 2 3 4 5 6 7 8 9	NONE

10 CIRCUIT

MOLEX PART NO.	TERMINAL VOID POSITION	REMOVED CODING KEYS	CONFIGURATION	COLOUR STRIPE
91791-8001	NONE	NONE	1 2 3 4 5 6 7 8 9 10	NONE

11 CIRCUIT

MOLEX PART NO.	TERMINAL VOID POSITION	REMOVED CODING KEYS	CONFIGURATION	COLOUR STRIPE
91791-9001	NONE	NONE	1 2 3 4 5 6 7 8 9 10 11	NONE

12 CIRCUIT

MOLEX PART NO.	TERMINAL VOID POSITION	REMOVED CODING KEYS	CONFIGURATION	COLOUR STRIPE
91791-9501	NONE	NONE	1 2 3 4 5 6 7 8 9 10 11 12	NONE

NOTES:
1. FIRST CKT SIDE IS THE SIDE CLOSEST TO CKT 1
2. LAST CKT SIDE IS THE SIDE CLOSEST TO THE HIGHEST CKT SIZE

⊕ - DENOTES TERMINAL POSITION LOADED
+ - DENOTES TERMINAL POSITION VOIDED
I - DENOTES POSITION OF POLARISING RIB
⊓ - DENOTES POSITION OF LOCKING LATCH

SEE SHEET 1
EC NO: E2010-0095
DRWN:TTOURISH 2009/09/04
CHKD:BRUTTLE 2009/09/04
APPR:BMAGUIRE 2009/09/07
REV: H
DESCRIPTION

QUALITY SYMBOLS
▼=0
▽=0

GENERAL TOLERANCES (UNLESS SPECIFIED)

	mm	INCH
4 PLACES	± ---	± ---
3 PLACES	± 0.10	± ---
2 PLACES	± 0.10	± ---
1 PLACE	± 0.2	± ---
ANGULAR ± 2 °		

DRAFT WHERE APPLICABLE MUST REMAIN WITHIN DIMENSIONS

DIMENSION STYLE: MM ONLY
SCALE: 1:1
DESIGN UNITS: METRIC
THIRD ANGLE PROJECTION

DRAWN BY: LKIERNAN DATE: 07/05/2003
CHECKED BY: BMAGUIRE DATE: 25/07/2003
APPROVED BY: BMAGUIRE DATE: 25/07/03
MATERIAL NO.: SEE CHARTS

TITLE: 10A RAST PWR IDT CONN 5MM PTCH
MOLEX INCORPORATED
DOCUMENT NO.: SD-91791-001
SHEET NO.: 2 OF 2
SIZE: A1

THIS DRAWING CONTAINS INFORMATION THAT IS PROPRIETARY TO MOLEX INCORPORATED AND SHOULD NOT BE USED WITHOUT WRITTEN PERMISSION