PROPER USE GUIDELINES

Cumulative Trauma Disorders can result from the prolonged use of manually powered hand tools. Hand tools are intended for occasional use and low volume applications. A wide selection of powered application equipment for extended-use, production operations is available.

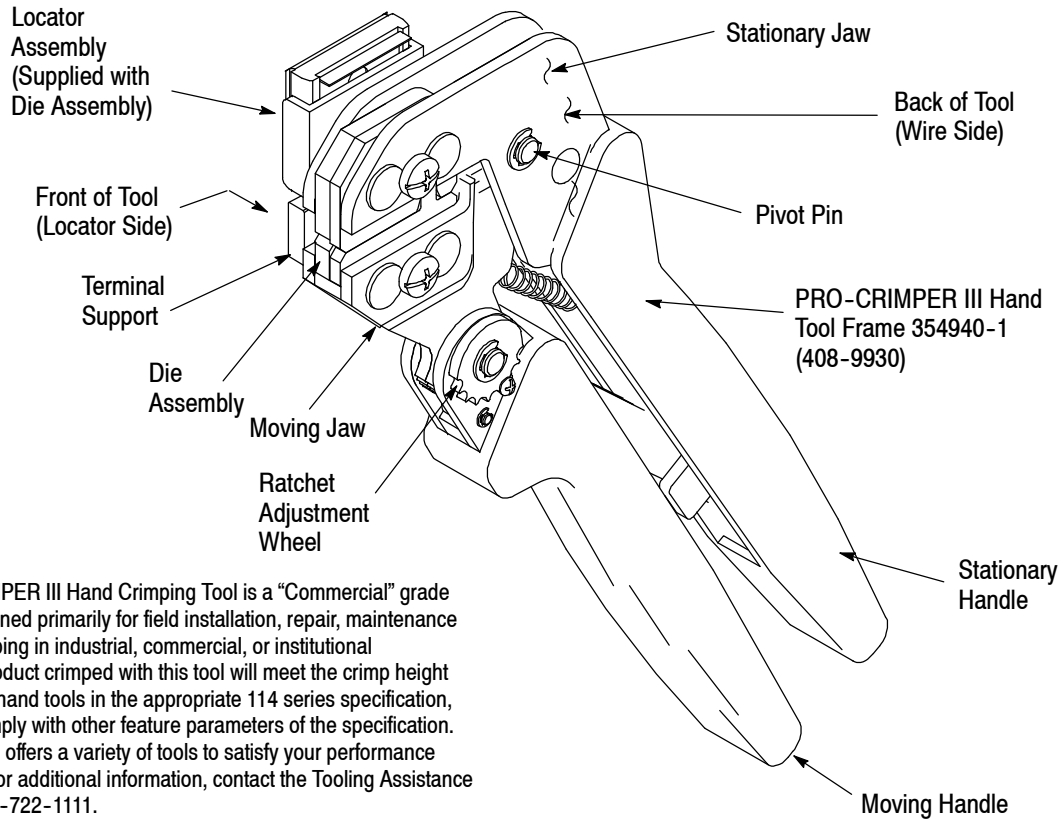

The PRO-CRIMPER III Hand Crimping Tool is a "Commercial" grade tool and is designed primarily for field installation, repair, maintenance work, or prototyping in industrial, commercial, or institutional applications. Product crimped with this tool will meet the crimp height requirement for hand tools in the appropriate 114 series specification, but may not comply with other feature parameters of the specification. Tyco Electronics offers a variety of tools to satisfy your performance requirements. For additional information, contact the Tooling Assistance Center at 1-800-722-1111.

TE Die Assembly	Locator Assembly†	Contact Family‡	Wire		
			Size (AWG)	Insul Dia (mm [in.])	Strip Length (mm [in.])
91363-2	58516-1	Mini Power Drawer Contact	20-18	1.98 to 2.79 [.078 to .110]	3.96 to 4.72 [.156 to .186]

† Supplied with die assembly. Also available separately.
‡ Contact the Tooling Assistance Center or Product Information (see below) for specific contact part numbers.

Figure 1

1. INTRODUCTION

PRO-CRIMPER III Hand Crimping Tool Assembly 91363-1 consists of Die Assembly 91363-2 and PRO-CRIMPER III Hand Tool Frame 354940-1. The die assembly consists of crimping dies and a locator assembly.

Read these instructions thoroughly before crimping any contacts.

NOTE

Dimensions on this sheet are in millimeters [with inch equivalents provided in brackets]. Figures and illustrations are for identification only and are not drawn to scale.

A list of revisions can be found in Section 11, REVISION SUMMARY.

©2009 Tyco Electronics Corporation, Harrisburg, PA
All International Rights Reserved
TE logo and Tyco Electronics are trademarks.
*Trademark. Other products, logos, and company names used are the property of their respective owners.

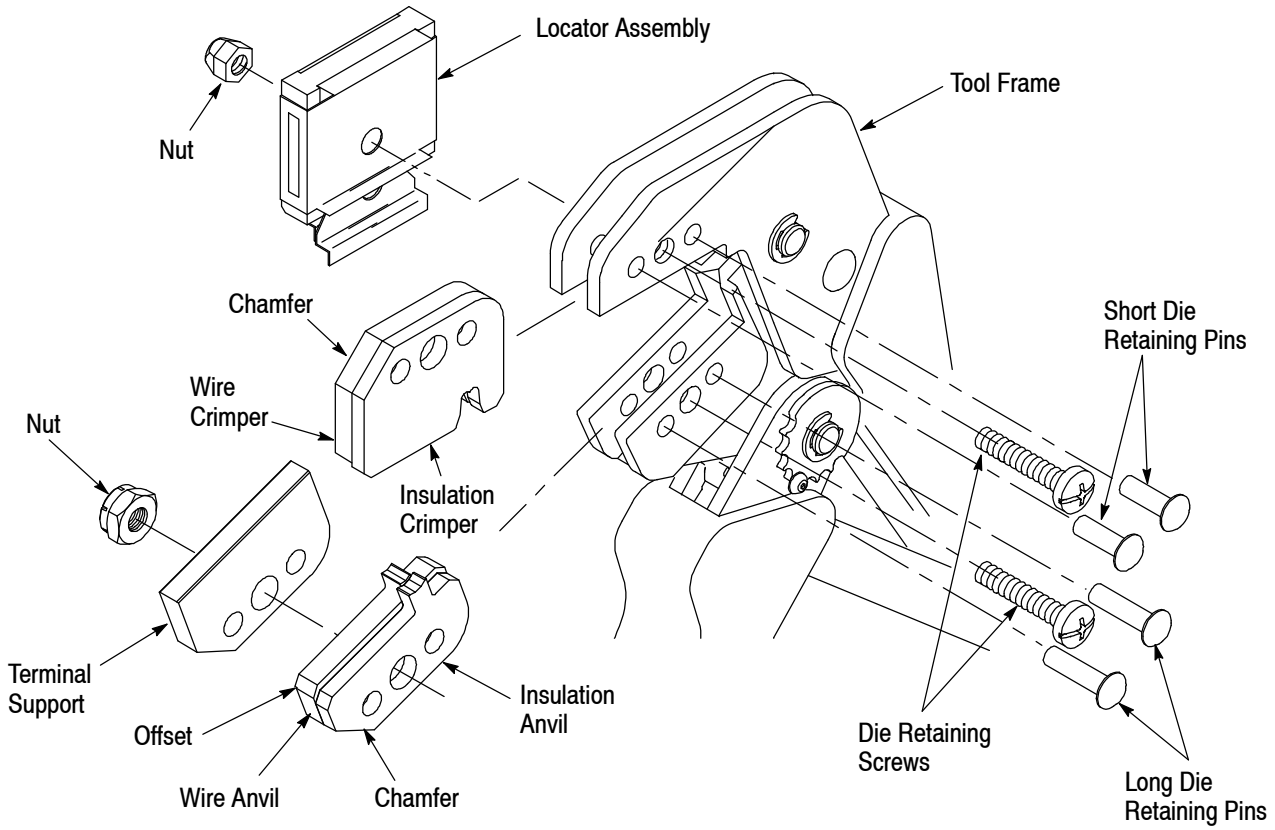

Figure 2

2. DESCRIPTION (Figures 1 and 2)

The tool features a tool frame with a stationary jaw and handle, a moving jaw, a moving handle, and an adjustable ratchet that ensures full contact crimping. The tool frame holds a die assembly with one crimping section.

The die assembly features a wire anvil, an insulation anvil, a wire crimper, and an insulation crimper.

Attached to the outside of the frame is a locator assembly and a terminal support. The locator assembly contains a locator, a spring retainer, and a contact support.

Die retaining pins and die retaining screws are used to position and secure the dies in the tool frame. A nut is used on the upper die retaining screw to hold the locator assembly in place. A nut is used on the lower die retaining screw to hold the terminal support in place.

3. INSTALLATION AND REMOVAL OF DIE SET AND LOCATOR ASSEMBLY (Figure 2)

1. Open the tool handles and remove the two die retaining screws from the tool jaw.

2. Place the wire anvil and insulation anvil so that their chamfered sides and their marked surfaces face outward, when mounted in the moving jaw of the tool frame.

3. Insert the two long die retaining pins.

4. Insert the die retaining screw through the jaw and through both anvil dies, and tighten the screw just enough to hold the dies in place. Do *not* tighten the screw completely at this time.

5. Place the wire crimper and insulation crimper so that their chamfered sides and their marked surfaces face outward, when mounted in the stationary jaw of the tool frame.

6. Insert the two short die retaining pins.

7. Insert the die retaining screw through the jaw and through both crimper dies, and tighten the screw just enough to hold the dies in place. Do *not* tighten the screw completely at this time.

8. Carefully close the tool handles, making sure that the anvils and crimpers align properly. Continue closing the tool handles until the ratchet in the tool frame has engaged sufficiently to hold the anvils and crimpers in place, then tighten both die retaining screws.

9. Place the locator assembly over the end of the upper screw, and position the locator assembly against the side of the tool jaw.

10. Place the nut onto the end of the upper screw and tighten the nut enough to hold the locator assembly in place, while still allowing the locator to slide up and down.

11. Place the terminal support over the lower screw. Place the nut on the lower screw and tighten the nut.

12. To disassemble, close the tool handles until the ratchet releases, remove the nuts, the locator assembly, the terminal support, the two die retaining screws, and the four die retaining pins, and slide the anvils and crimpers out of the tool jaws.

4. CONTACT SUPPORT ADJUSTMENT (Figure 3)

NOTE

The contact support is preset prior to shipment, but minor adjustment may be necessary.

1. Make a sample crimp and determine if the contact is straight, bending upward, or bending downward.

2. If adjustment is required, loosen the screw that holds the contact support onto the locator assembly.

NOTE

The ratchet has detents that create audible clicks as the tool handles are closed.

3. Place a contact with wire into the proper nest and close the tool handles until the ratchet reaches the sixth click, or until the contact support touches the contact.

4. Slightly loosen the nut that holds the locator assembly onto the tool frame.

5. Move the contact support as required to eliminate the bending of the contact.

6. Tighten the nut and close the handles until the ratchet releases.

7. Remove and inspect the contact.

8. Make another sample crimp. If the contact is straight, tighten the contact support screw. If the contact is still being bent during crimping, repeat the adjustment procedure.

5. CRIMPING PROCEDURE

NOTE

This tool is provided with a crimp adjustment feature. Initially, the crimp height should be verified as specified in Figure 4. Refer to Section 6, CRIMP HEIGHT INSPECTION, and Section 7, RATCHET (Crimp Height) ADJUSTMENT, to verify crimp height before using the tool to crimp desired contacts and wire sizes.

Refer to the table in Figure 1 and select wire of the specified size and insulation diameter. Strip the wire to the length indicated in Figure 1, taking care not to nick or cut wire strands. Select an applicable contact and identify the appropriate crimp section according to the wire size markings on the tool. Refer to Figure 3 and proceed as follows:

1. Hold the tool so that the back (wire side) is facing you. Squeeze tool handles together and allow them to open fully.

2. Holding the contact by the mating end, insert the contact — insulation barrel first — through the front of the tool and into the appropriate crimp section.

3. Position the contact so that the mating end of the contact is on the locator side of the tool, and so that the open “U” of the wire and insulation barrels face the top of the tool. Place the contact up into the nest so that the movable locator drops into the slot in the contact. Refer to Figure 3. Butt the front end of the wire barrel against the movable locator.

4. Hold the contact in position and squeeze the tool handles together until ratchet engages sufficiently to hold the contact in position. Do NOT deform insulation barrel or wire barrel.

5. Insert stripped wire into contact insulation and wire barrels until it is butted against the wire stop, as shown in Figure 3.

6. Holding the wire in place, squeeze tool handles together until ratchet releases. Allow tool handles to open and remove crimped contact.

NOTE

The crimped contact may stick in the crimping area, but the contact can be easily removed by pushing downward on the top of the locator (see Figure 3).

7. Check the contact’s crimp height as described in Section 6, CRIMP HEIGHT INSPECTION. If necessary, adjust the crimp height as described in Section 7, RATCHET (Crimp Height) ADJUSTMENT.

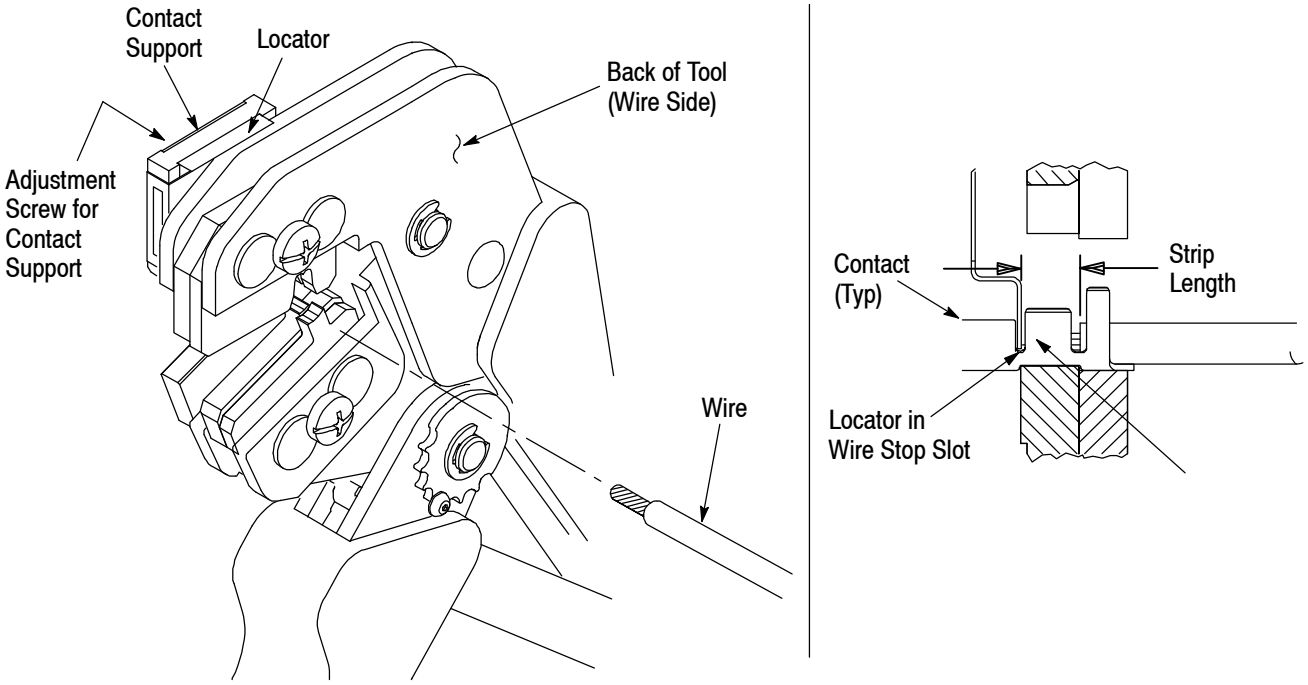

Figure 3

6. CRIMP HEIGHT INSPECTION

Crimp height inspection is performed through the use of a micrometer with a modified anvil, commonly referred to as a crimp-height comparator. Tyco Electronics does not manufacture or market crimp-height comparators. Detailed information on obtaining and using crimp-height comparators can be found in instruction sheet 408-7424.

Proceed as follows:

1. Refer to Figure 4 and select a wire (maximum size) for each crimp section listed.

2. Refer to Section 5, CRIMPING PROCEDURE, and crimp the contact(s) accordingly.

3. Using a crimp height comparator, measure the wire barrel crimp height as shown in Figure 4. If the crimp height conforms to that shown in the table, the tool is considered dimensionally correct. If not, the tool must be adjusted. Refer to Section 7, RATCHET (Crimp Height) ADJUSTMENT.

7. RATCHET (Crimp Height) ADJUSTMENT (Figure 5)

1. Remove the lockscrew from the ratchet adjustment wheel.

2. With a screwdriver, adjust the ratchet wheel from the locator side of the tool.

3. Observe the ratchet adjustment wheel. If a tighter crimp is required, rotate the adjustment wheel COUNTERCLOCKWISE to a higher-numbered setting. If a looser crimp is required, rotate the adjustment wheel CLOCKWISE to a lower-numbered setting.

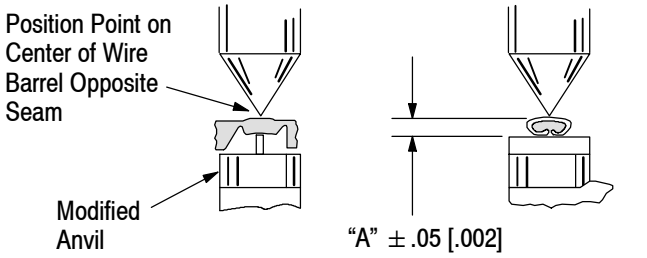

Wire Size AWG (Max.)	Crimp Section (Wire Size Marking)	Crimp Height Dim. (A)
18	20 - 18	1.40 [.0055]

Figure 4

4. Replace the lockscrew.

5. Make a sample crimp and measure the crimp height. If the dimension is acceptable, replace and secure the lockscrew. If the dimension is unacceptable, continue to adjust the ratchet, and again measure a sample crimp.

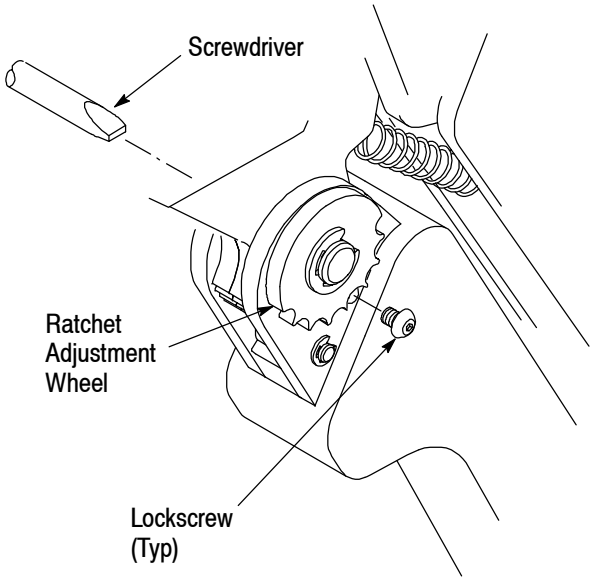

Figure 5

8. MAINTENANCE

Ensure that the tool and dies are clean by wiping them with a clean, soft cloth. Remove any debris with a clean, soft brush. Do not use objects that could damage the tool. When not in use, keep handles closed to prevent objects from becoming lodged in the crimping dies, and store in a clean, dry area.

9. VISUAL INSPECTION

The crimping dies should be inspected on a regular basis to ensure that they have not become worn or damaged. Inspect the crimp sections for flattened, chipped, worn, or broken areas. If damage or abnormal wear is evident, the tool must be replaced. See Section 10, REPLACEMENT.

10. REPLACEMENT

Customer-replaceable parts are shown in Figure 1.

Available separately, PRO-CRIMPER III Hand Crimping Tool Repair Kit 679221-1 includes a replacement nut and a variety of pins, rings, screws, and springs.

If the dies are damaged or worn excessively, they must be replaced.

Order the repair kit and replaceable parts through your Tyco Electronics representative, or call 1-800-526-5142, or send a facsimile of your purchase order to 1-717-986-7605, or write to:

CUSTOMER SERVICE (38-35)
TYCO ELECTRONICS CORPORATION
PO BOX 3608
HARRISBURG PA 17105-3608

11.REVISION SUMMARY

Revisions to this instruction sheet include:

- PRO-CRIMPER II Hand Tool became the PRO-CRIMPER III Hand Tool;
- Applied the TE logo;
- Revised the crimp-height comparator information;
- Updated format to current corporate requirements; and
- Added back page to indicate the tooling compatible with Dies 91363-2.

Dies 91363-2 May Also Be Used with the Following Tools.

PRO-CRIMPER III Hand Tool 354940-1
(Instruction Sheet 408-9930)

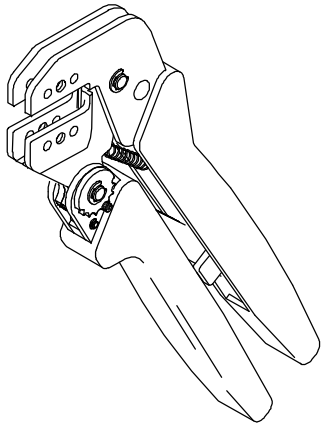

SDE PEW-12 Hand Tool 9-1478240-0
(Instruction Sheet 408-8851)

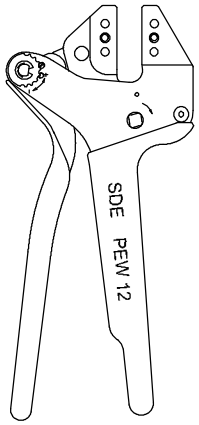

SDE Bench Terminator 1490076-2
(Customer Manual 409-10052)

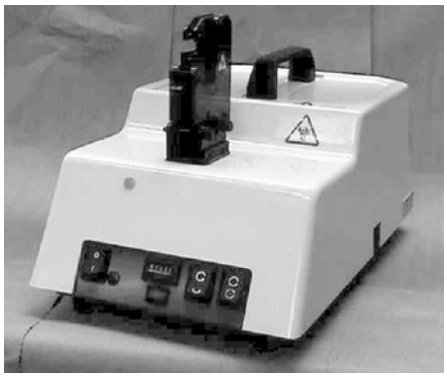

626 Adapter 679304-1
(Instruction Sheet 408-4070)

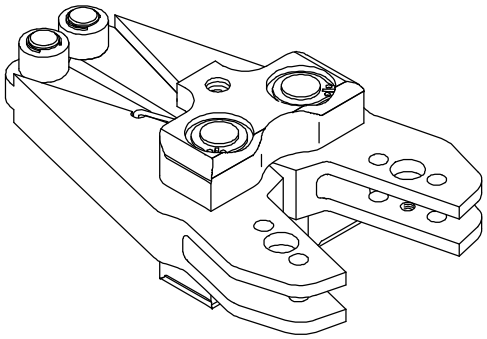

Battery Tool (Shouldered Die) 1725837-1, -2
(Customer Manual 409-10053)

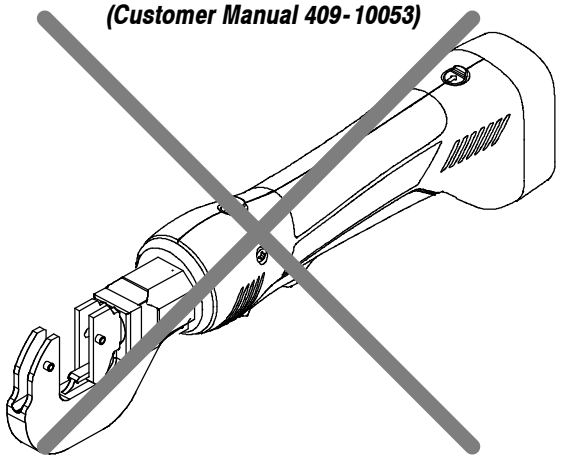

Battery Tool (Pin Die) 1213890-1, -2
(Customer Manual 409-10065)

