Product data sheet
Characteristics

9050JCK37V20
Timing Relay, Type JCK, plug In, interval, adjustable time, 0.3 to 30 minutes, 10A, 240 VAC, 120 VAC/110 VDC

Product availability : Stock - Normally stocked in distribution facility

Price* : 87.00 USD



Main

Product range	9050JCK
Product type	Timer
Timing mode	Interval
Timing range	0.3...30 min
Supply voltage	120 V AC 110 V DC

Complementary

Power consumption	2 VA
Current rating	10 A
Switch function	DPDT
Contact composition	2 NO + 2 NC
Contact material	Silver nickel
Maximum switching voltage	240 V AC
Mounting type	Socket
Number of pins	8
Shape of pins	Tubular
For use with	8501NR52 8501NR51

Environment

Certifications	CE UL Listed UL Recognized

* Price is “List Price” and may be subject to a trade discount – check with your local distributor or retailer for actual price.

Disclaimer: This documentation is not intended as a substitute for and is not to be used for determining suitability or reliability of these products for specific user applications

Ambient temperature range - operational	-18…150 °F (-28…66 °C)
Maximum Height	2.40 in (61 mm)
Maximum Width	1.69 in (43 mm)
Maximum Depth	4.09 in (104 mm)

Ordering and shipping details

Category	21651 - 9050 JCK(NOT JCK60, 70) G P TIMERS
Discount Schedule	CP2
GTIN	00785901032861
Nbr. of units in pkg.	1
Package weight(Lbs)	0.29 lb(US) (0.13 kg)
Returnability	Yes
Country of origin	US

Packing Units

Unit Type of Package 1	PCE
Package 1 Height	1.80 in (4.572 cm)
Package 1 width	2.50 in (6.35 cm)
Package 1 Length	4.50 in (11.43 cm)
Unit Type of Package 2	CAR
Number of Units in Package 2	20
Package 2 Weight	5.50 lb(US) (2.495 kg)
Package 2 Height	4.50 in (11.43 cm)
Package 2 width	10.00 in (25.4 cm)
Package 2 Length	11.00 in (27.94 cm)

Offer Sustainability

Sustainable offer status	Green Premium product
REACh Regulation	REACh Declaration
REACh free of SVHC	Yes
EU RoHS Directive	Pro-active compliance (Product out of EU RoHS legal scope) EU RoHS Declaration
Toxic heavy metal free	Yes
Mercury free	Yes
RoHS exemption information	Yes
China RoHS Regulation	China RoHS declaration
Environmental Disclosure	Product Environmental Profile
Circularity Profile	End of Life Information

Contractual warranty

Warranty	18 months

9050JCK37V20

Dimensions

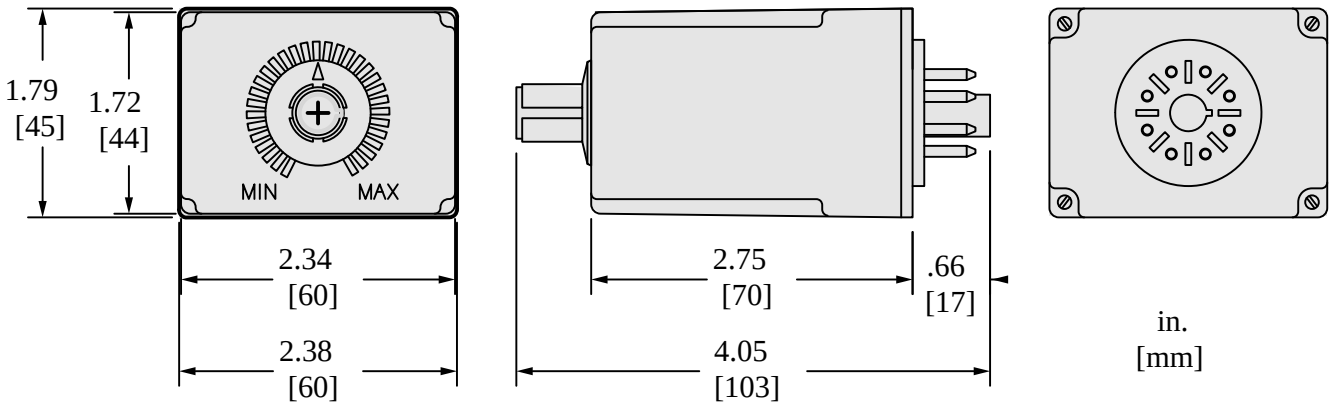

All dimensions are approximate. Also see technical documentation.

Wiring Diagram

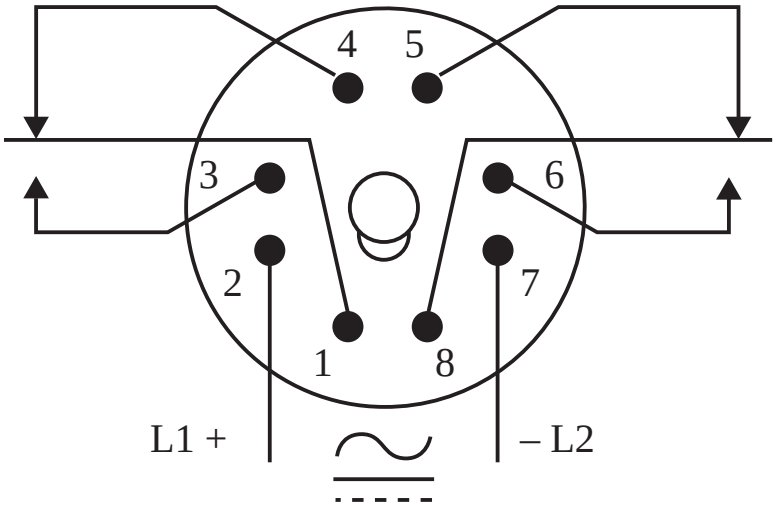

Control Power

JCK 11 – JCK19
JCK31 – JCK39
JCK51 – JCK59
JCK60