molex
one company > a world of innovation

This document was generated on 05/24/2010

PLEASE CHECK WWW.MOLEX.COM FOR LATEST PART INFORMATION

Part Number: 0901522130
Status: Active
Overview: cgrid__sl_products
Description: 2.54mm (.100") Pitch C-Grid III™ PC Board Connector, Dual Row, Right Angle, Straight PCB Pins 1.0µm (40µ") Tin (Sn), 30 Circuits

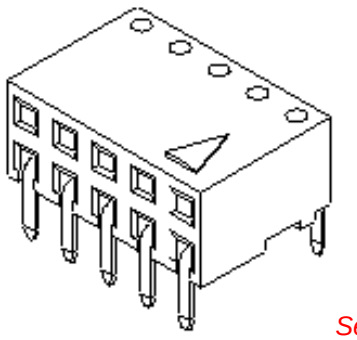

Series image - Reference only

Documents:
3D Model
Drawing (PDF)
RoHS Certificate of Compliance (PDF)

General

Product Family	PCB Receptacles
Series	90152
Application	Board-to-Board
Overview	cgrid__sl_products
Product Name	C-Grid III™

Physical

Circuits (Loaded)	30
Circuits (maximum)	30
Color - Resin	Black
Durability (mating cycles max)	30
Glow-Wire Compliant	No
Guide to Mating Part	No
Keying to Mating Part	None
Lock to Mating Part	No
Material - Metal	Phosphor Bronze
Material - Plating Mating	Tin
Material - Plating Termination	Tin
Material - Resin	Polyester
Number of Rows	2
Orientation	Right Angle
PC Tail Length (in)	0.114 In
PC Tail Length (mm)	2.90 mm
PCB Locator	No
PCB Retention	None
PCB Thickness Recommended (in)	0.063 In
PCB Thickness Recommended (mm)	1.60 mm
Packaging Type	Tube
Pitch - Mating Interface (in)	0.100 In
Pitch - Mating Interface (mm)	2.54 mm
Pitch - Term. Interface (in)	0.100 In
Pitch - Term. Interface (mm)	2.54 mm
Plating min: Mating (µin)	40
Plating min: Mating (µm)	1.00
Plating min: Termination (µin)	40
Plating min: Termination (µm)	1.00
Polarized to Mating Part	Yes
Polarized to PCB	No
Stackable	No
Surface Mount Compatible (SMC)	No
Temperature Range - Operating	-55°C to +125°C
Termination Interface: Style	Through Hole

Electrical

Current - Maximum per Contact	3A

EU RoHS
ELV and RoHS Compliant
REACH SVHC
Contains SVHC: No
Halogen-Free Status
Not Reviewed

China RoHS

Need more information on product environmental compliance?

Email productcompliance@molex.com
For a multiple part number RoHS Certificate of Compliance, click here

Please visit the Contact Us section for any non-product compliance questions.

Search Parts in this Series
90152Series

Mates With
90122 , 90131

Grounding to PCB	No
Voltage - Maximum	350V AC/DC

Solder Process Data

Lead-free Process Capability	Wave Capable (TH only)

Material Info

Reference - Drawing Numbers

Sales Drawing	SDA-90152

This document was generated on 05/24/2010

PLEASE CHECK WWW.MOLEX.COM FOR LATEST PART INFORMATION

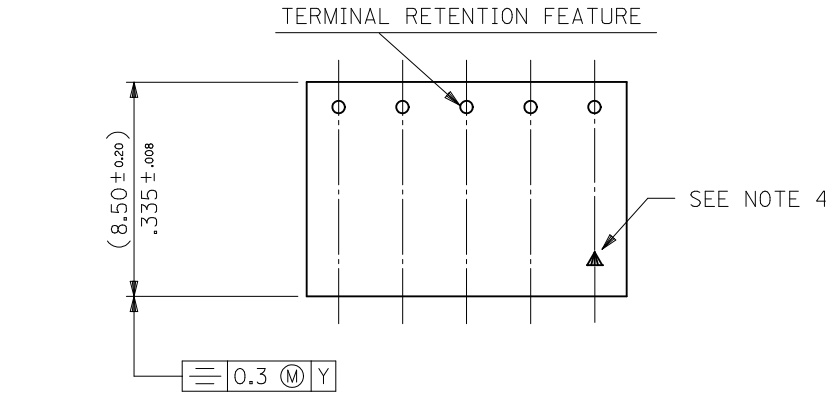

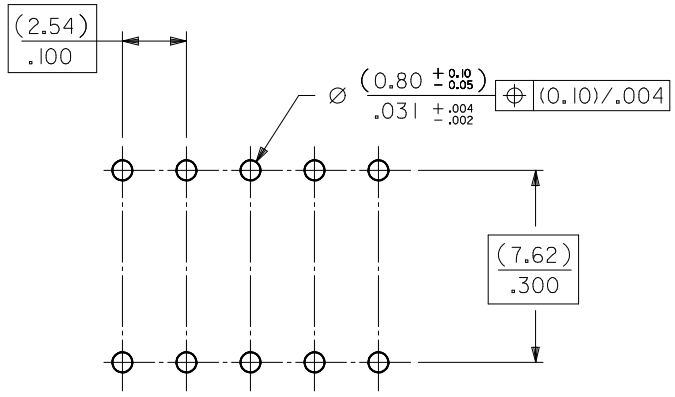

RECOMMENDED P.C. BOARD
HOLE PATTERN

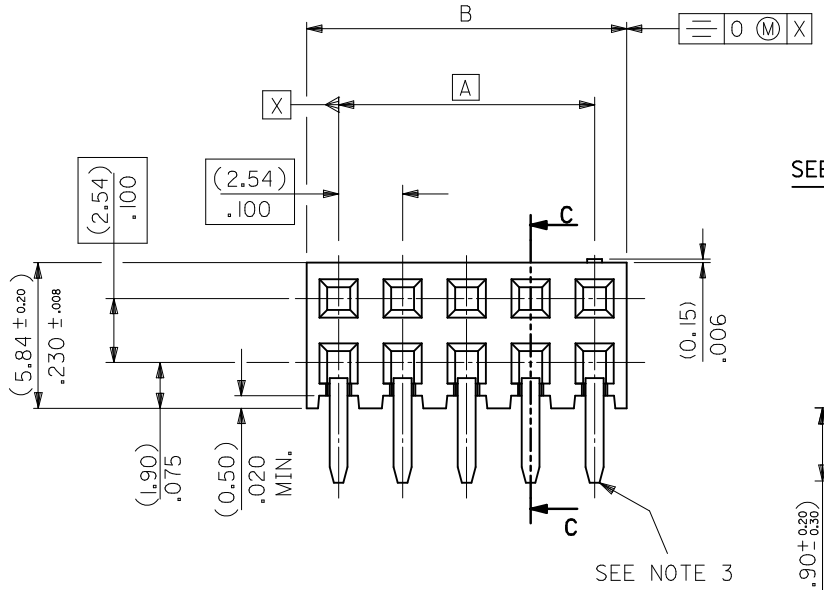

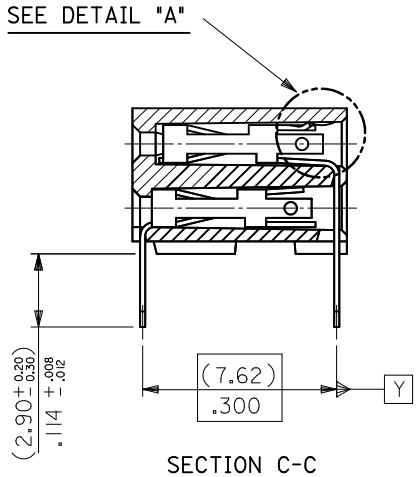

SECTION C-C

NOTES

1) CONTACT-PLATED PHOSPHOR BRONZE.
2) HOUSING-15% GLASS FILLED POLYESTER. COLOUR-BLACK.
3) COMPATABLE WITH PCB HOLE PATTERN.
4) THIS MARK INDICATES CIRCUIT NO.1.
5) FOR (0.635)/.025 SQ. MALE PINS THE LENGTH MUST BE (5.65)/.222 MIN & (7.00)/.276 MAX. TO ENSURE GOOD CONNECTION WITH CONTACT.
6) PRODUCT SPECIFICATION: PS-99020-0001
7) RECOMMENDED PCB THICKNESS 1.6MM

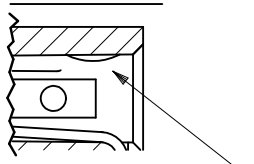

CHG PKG QTY FOR 4CKT
EC NO: S2010-0556
DRWN:ATSEE 2010/01/12
CH'KD:SKANG 2010/01/14
APPR:MLONG 2010/01/14
DESCRIPTION
REV B

QUALITY SYMBOLS
FA=0
FC=0
FB=0

GENERAL TOLERANCES (UNLESS SPECIFIED)

	mm	INCH
4 PLACES	± ---	± ---
3 PLACES	± ---	± ---
2 PLACES	± 0.20	± .008
1 PLACE	± ---	± ---
ANGULAR ± 2 °		

DRAFT WHERE APPLICABLE MUST REMAIN WITHIN DIMENSIONS

DIMENSION STYLE: MM ONLY
SCALE: NTS
DESIGN UNITS: METRIC
THIRD ANGLE PROJECTION

DRAWN BY: DB DATE: 1987/07/14
CHECKED BY: DB DATE: 1987/07/14
APPROVED BY: MLONG DATE: 2010/01/14

TITLE: C-GRID PCB CONN DR HORZ

MOLEX INCORPORATED

MATERIAL NO.: SEE TABLE
DOCUMENT NO.: SDA-90152
SHEET NO.: 1 OF 5
SIZE: A3

THIS DRAWING CONTAINS INFORMATION THAT IS PROPRIETARY TO MOLEX INCORPORATED AND SHOULD NOT BE USED WITHOUT WRITTEN PERMISSION

PART NO.	CKT	DIM. A		DIM. B $(^{+0.00}_{-0.30})$ $^{+0.00}_{-0.12}$		PCS/ TUBE
90152-XX04	4	(2.54)	.100	(5.08)	.200	109
06	6	(5.08)	.200	(7.62)	.300	73
08	8	(7.62)	.300	(10.16)	.400	55
10	10	(10.16)	.400	(12.70)	.500	44
12	12	(12.70)	.500	(15.24)	.600	36
14	14	(15.24)	.600	(17.78)	.700	31
16	16	(17.78)	.700	(20.32)	.800	27
18	18	(20.32)	.800	(22.86)	.900	24
20	20	(22.86)	.900	(25.40)	1.000	22
22	22					20
24	24	(27.94)	1.100	(30.48)	1.200	18
26	26	(30.48)	1.200	(33.02)	1.300	16
28	28					14
30	30	(35.56)	1.400	(38.10)	1.500	14
32	32					13
34	34	(40.64)	1.600	(43.18)	1.700	12
36	36	(43.18)	1.700	(45.72)	1.800	12
38	38	(45.72)	1.800	(48.26)	1.900	11
40	40	(48.26)	1.900	(50.80)	2.000	11
42	42					10
44	44	(53.34)	2.100	(55.88)	2.200	10
46	46					10
48	48					9
50	50	(60.96)	2.400	(63.50)	2.500	8
52	52					8
54	54					8
56	56	(68.58)	2.700	(71.12)	2.800	7
58	58					7
60	60	(73.66)	2.900	(76.20)	3.000	7
62	62					6
90152-XX64	64	(78.74)	3.100	(81.28)	3.200	5

PLATING VERSION A

PRE-PLATED HOT DIP TIN
1.0 TO 2.5 microns (.00004" TO .00010").

PLATING VERSION E

1.27 TO 1.78 microns (.00005" TO .00007") NICKEL
OVERALL, 0.38 TO 0.64 microns (.000015" TO .000025")
GOLD ON CONTACT AREA (OVER NICKEL).
3 TO 5 microns (.00012" TO .00020") TIN
ON SOLDER TAILS (OVER NICKEL).

PLATING VERSION F

1.27 TO 1.78 microns (.00005" TO .00007") NICKEL
OVERALL, 0.76 TO 1.0 microns (.00003" TO .00004")
GOLD ON CONTACT AREA (OVER NICKEL).
3 TO 5 microns (.00012" TO .00020") TIN
ON SOLDER TAILS (OVER NICKEL).

PLATING VERSION G

1.27 TO 1.78 microns (.00005" TO .00007") NICKEL
OVERALL, 0.125 TO 0.20 microns (.000005" TO .0000079")
GOLD ON CONTACT AREA (OVER NICKEL).
3 TO 5 microns (.00012" TO .00020") TIN
ON SOLDER TAILS (OVER NICKEL).

90152 - X X Y Y

- YY: INDICATES NO. OF CIRCUITS
- XX: PLATING CODE.
  - 21 = VERSION A
  - 22 = VERSION E
  - 23 = VERSION F
  - 25 = VERSION G

STANDARD PRODUCTS

CHG PKG QTY FOR 4CKT
EC NO: S2010-0556
DRWN:ATSEE 2010/01/12
CH'KD:SKANG 2010/01/14
APPR:MLONG 2010/01/14
DESCRIPTION
B
REV

QUALITY SYMBOLS
F_A=0
F_C=0
F_P=0

GENERAL TOLERANCES (UNLESS SPECIFIED)

	mm	INCH
4 PLACES	± ---	± ---
3 PLACES	± ---	± ---
2 PLACES	± 0.20	± .008
1 PLACE	± ---	± ---
ANGULAR ± 2 °		

DRAFT WHERE APPLICABLE MUST REMAIN WITHIN DIMENSIONS

DIMENSION STYLE: MM ONLY
SCALE: NTS
DESIGN UNITS: METRIC
THIRD ANGLE PROJECTION

DRAWN BY: DB DATE: 1987/07/14
CHECKED BY: DB DATE: 1987/07/14
APPROVED BY: MLONG DATE: 2010/01/14

TITLE: C-GRID PCB CONN DR HORZ

MOLEX INCORPORATED

MATERIAL NO.: SEE TABLE
DOCUMENT NO.: SDA-90152
SHEET NO.: 2 OF 5
SIZE: A3

THIS DRAWING CONTAINS INFORMATION THAT IS PROPRIETARY TO MOLEX INCORPORATED AND SHOULD NOT BE USED WITHOUT WRITTEN PERMISSION

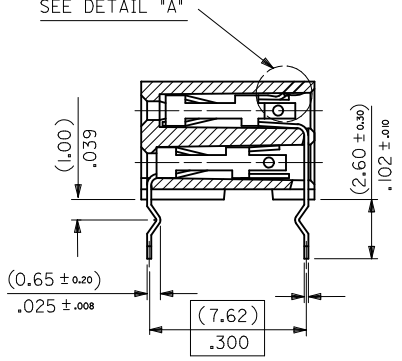

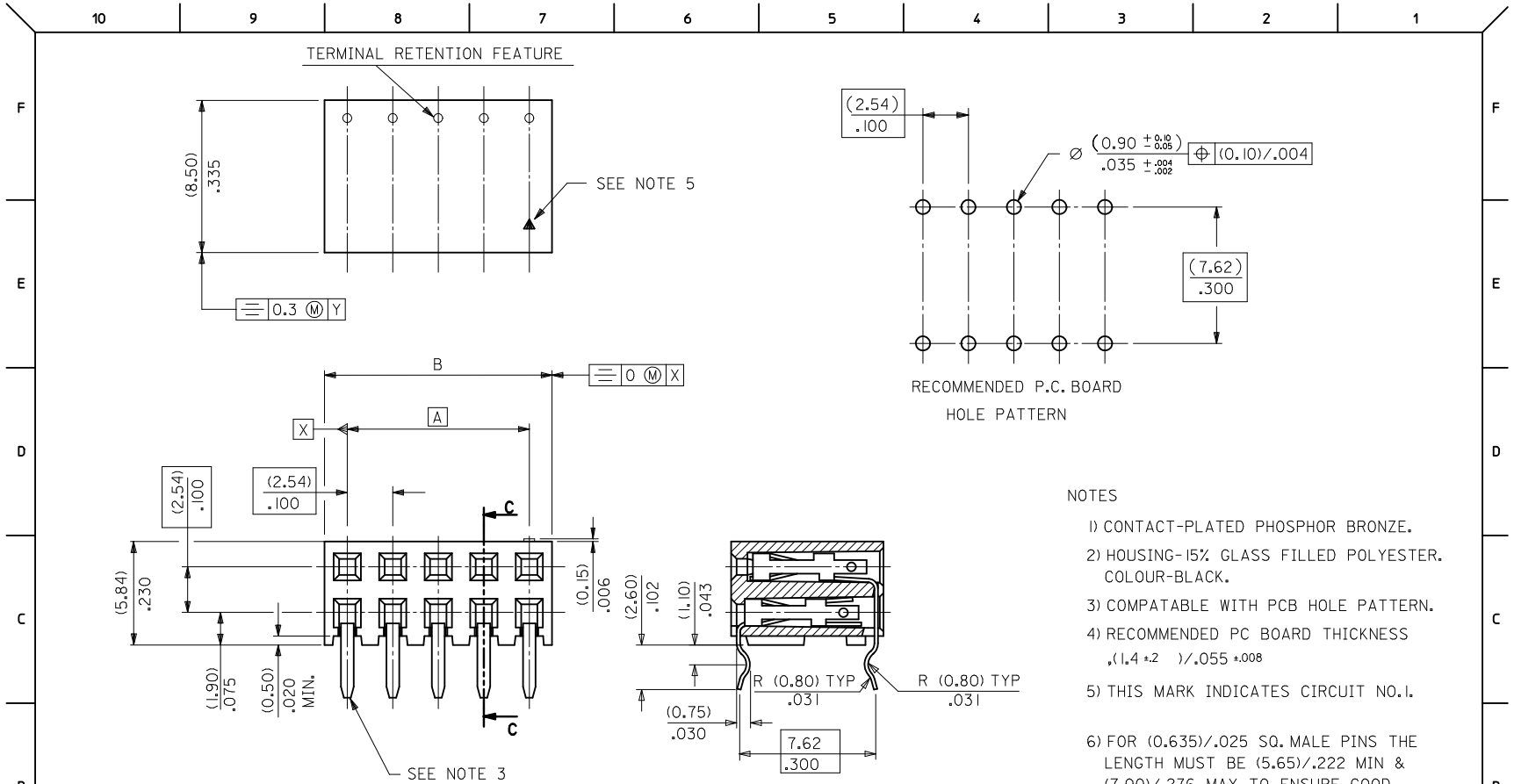

SECTION C-C

NOTES

1) CONTACT-PLATED PHOSPHOR BRONZE.
2) HOUSING-15% GLASS FILLED POLYESTER. COLOUR-BLACK.
3) COMPATABLE WITH PCB HOLE PATTERN.
4) RECOMMENDED PC BOARD THICKNESS
   „(1.4 ±.2)/.055 ±.008
5) THIS MARK INDICATES CIRCUIT NO.1.
6) FOR (0.635)/.025 SQ. MALE PINS THE LENGTH MUST BE (5.65)/.222 MIN & (7.00)/.276 MAX. TO ENSURE GOOD CONNECTION WITH CONTACT.

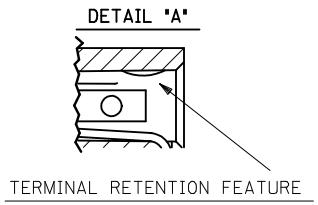

CHG PKG QTY FOR 4CKT
EC NO: S2010-0556 2010/01/12
DRWN:ATSEE 2010/01/14
CHKD:SKANG 2010/01/14
APPR:MLONG 2010/01/14
DESCRIPTION
B
REV

QUALITY SYMBOLS
FA=0
FC=0
FB=0

GENERAL TOLERANCES (UNLESS SPECIFIED)

	mm	INCH
4 PLACES	± ---	± ---
3 PLACES	± ---	± ---
2 PLACES	± 0.20	± .008
1 PLACE	± ---	± ---

ANGULAR ± 2 °

DRAFT WHERE APPLICABLE MUST REMAIN WITHIN DIMENSIONS

DIMENSION STYLE	MM ONLY
SCALE	NTS
DESIGN UNITS	METRIC
	THIRD ANGLE PROJECTION
DRAWN BY	DB
DATE	1987/07/14
CHECKED BY	DB
DATE	1987/07/14
APPROVED BY	MLONG
DATE	2010/01/14
MATERIAL NO.	SEE TABLE
TITLE	C-GRID PCB CONN DR HORZ
	MOLEX INCORPORATED
DOCUMENT NO.	SDA-90152
SHEET NO.	3 OF 5
SIZE	A3

THIS DRAWING CONTAINS INFORMATION THAT IS PROPRIETARY TO MOLEX INCORPORATED AND SHOULD NOT BE USED WITHOUT WRITTEN PERMISSION

PART NO.	CKT	DIM. A		DIM. B $(^{+0.00}_{-0.30})$ $^{+0.00}_{-0.12}$		PCS/ TUBE
90152-XX04	4	(2.54)	.100	(5.08)	.200	109
06	6	(5.08)	.200	(7.62)	.300	73
08	8	(7.62)	.300	(10.16)	.400	55
10	10	(10.16)	.400	(12.70)	.500	44
12	12	(12.70)	.500	(15.24)	.600	36
14	14	(15.24)	.600	(17.78)	.700	31
16	16	(17.78)	.700	(20.32)	.800	27
18	18	(20.32)	.800	(22.86)	.900	24
20	20	(22.86)	.900	(25.40)	1.000	22
22	22					20
24	24	(27.94)	1.100	(30.48)	1.200	18
26	26	(30.48)	1.200	(33.02)	1.300	16
28	28					14
30	30	(35.56)	1.400	(38.10)	1.500	14
32	32					13
34	34	(40.64)	1.600	(43.18)	1.700	12
36	36	(43.18)	1.700	(45.72)	1.800	12
38	38	(45.72)	1.800	(48.26)	1.900	11
40	40	(48.26)	1.900	(50.80)	2.000	11
42	42					10
44	44	(53.34)	2.100	(55.88)	2.200	10
46	46					10
48	48					9
50	50	(60.96)	2.400	(63.50)	2.500	8
52	52					8
54	54					8
56	56	(68.58)	2.700	(71.12)	2.800	7
58	58					7
60	60	(73.66)	2.900	(76.20)	3.000	7
62	62					6
90152-XX64	64	(78.74)	3.100	(81.28)	3.200	5

PLATING VERSION A

PRE-PLATED HOT DIP TIN
1.0 TO 2.5 microns (.00004" TO .00010").

PLATING VERSION E

1.27 TO 1.78 microns (.00005" TO .00007") NICKEL
OVERALL, 0.38 TO 0.64 microns (.000015" TO .000025")
GOLD ON CONTACT AREA (OVER NICKEL).
3 TO 5 microns (.00012" TO .00020") TIN
ON SOLDER TAILS (OVER NICKEL).

PLATING VERSION F.

1.27 TO 1.78 microns (.00005" TO .00007") NICKEL
OVERALL, 0.76 TO 1.0 microns (.00003" TO .00004")
GOLD ON CONTACT AREA (OVER NICKEL).
3 TO 5 microns (.00012" TO .00020") TIN
ON SOLDER TAILS (OVER NICKEL).

PLATING VERSION G.

1.27 TO 1.78 microns (.00005" TO .00007") NICKEL
OVERALL, 0.125 TO 0.20 microns (.000005" TO .0000079")
GOLD ON CONTACT AREA (OVER NICKEL).
3 TO 5 microns (.00012" TO .00020") TIN
ON SOLDER TAILS (OVER NICKEL).

90152-XXYY

INDICATES NO. OF CIRCUITS.

PLATING CODE.
31 = VERSION A.
32 = VERSION E.
33 = VERSION F.
35 = VERSION G.

CHG PKG QTY FOR 4CKT 2010/01/12
EC NO: S2010-0556 2010/01/14
DRWN:ATSEE CH'KD:SKANG APPR:MLONG 2010/01/14
DESCRIPTION
B
REV

QUALITY SYMBOLS
F_A=0
F_C=0
F_P=0

GENERAL TOLERANCES (UNLESS SPECIFIED)

	mm	INCH
4 PLACES	± ---	± ---
3 PLACES	± ---	± ---
2 PLACES	± 0.20	± .008
1 PLACE	± ---	± ---
ANGULAR ± 2 °		

DRAFT WHERE APPLICABLE MUST REMAIN WITHIN DIMENSIONS

DIMENSION STYLE: MM ONLY
SCALE: NTS
DESIGN UNITS: METRIC
THIRD ANGLE PROJECTION

DRAWN BY: DB DATE: 1987/07/14
CHECKED BY: DB DATE: 1987/07/14
APPROVED BY: MLONG DATE: 2010/01/14

TITLE: C-GRID PCB CONN DR HORZ

MOLEX INCORPORATED

MATERIAL NO.: SEE TABLE
DOCUMENT NO.: SDA-90152
SHEET NO.: 4 OF 5
SIZE: A3

THIS DRAWING CONTAINS INFORMATION THAT IS PROPRIETARY TO MOLEX INCORPORATED AND SHOULD NOT BE USED WITHOUT WRITTEN PERMISSION

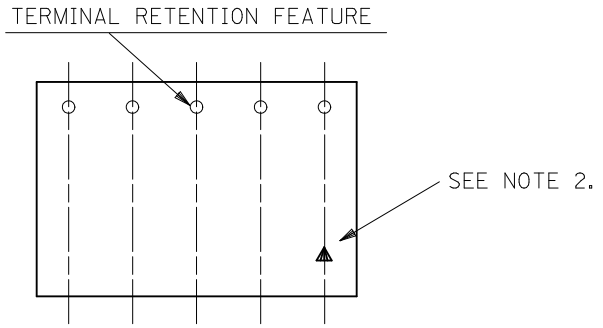

PART NUMBER	CKT. SIZE	PIN VOID	KINKED PINS	NO. PER TUBE
90152-6234	2 X 17	21	NONE	12
90152-5242	2 X 21	5	NONE	10
90152-7130	2 X 15	NONE	1,2 & 29,30	14

NOTES

1) FOR DIMENSIONS SEE SHEET 1.
2) THIS MARK INDICATES CIRCUIT NO.1.

3) SOLDER TAIL OF TERMINAL IN VOIDED CAVITY MUST BE CROPPED AS SHOWN OR TERMINAL REMOVED.

90152-XXYY

INDICATES NO. OF CIRCUITS.

PLATING CODE.
1 = VERSION A.
2 = VERSION E.
3 = VERSION F.
5 = VERSION G.

OPTIONS
2 = REGULAR
3 = KINKED
5 = VOIDS
6 = KINKS & VOIDS
7 = SELECTIVE KINKS

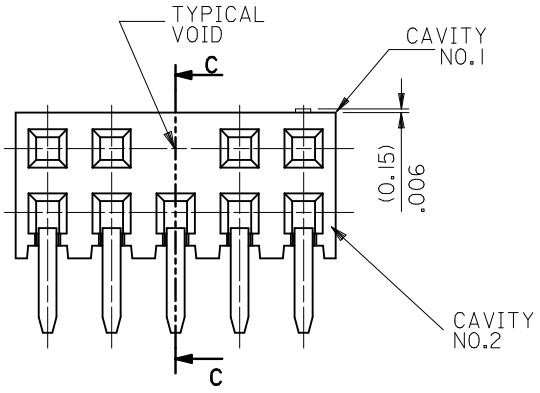

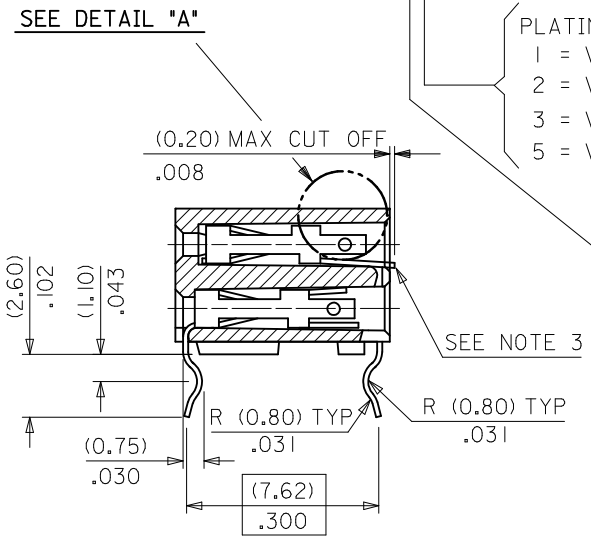

SECTION C-C

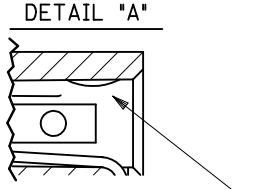

CHG PKG QTY FOR 4CKT
EC NO: S2010-0556 2010/01/12
DRWN:ATSEE 2010/01/14
CH'KD:SKANG 2010/01/14
APPR:MLONG
DESCRIPTION
B
REV

QUALITY SYMBOLS
FA=0
FC=0
FP=0

GENERAL TOLERANCES (UNLESS SPECIFIED)

	mm	INCH
4 PLACES	± ---	± ---
3 PLACES	± ---	± ---
2 PLACES	± 0.20	± .008
1 PLACE	± ---	± ---
ANGULAR ± 2 °		

DRAFT WHERE APPLICABLE MUST REMAIN WITHIN DIMENSIONS

DIMENSION STYLE: MM ONLY
SCALE: NTS
DESIGN UNITS: METRIC
THIRD ANGLE PROJECTION

DRAWN BY: DB DATE: 1987/07/14
CHECKED BY: DB DATE: 1987/07/14
APPROVED BY: MLONG DATE: 2010/01/14

TITLE: C-GRID PCB CONN DR HORZ

MOLEX INCORPORATED

MATERIAL NO.: SEE TABLE
DOCUMENT NO.: SDA-90152
SHEET NO.: 5 OF 5
SIZE: A3

THIS DRAWING CONTAINS INFORMATION THAT IS PROPRIETARY TO MOLEX INCORPORATED AND SHOULD NOT BE USED WITHOUT WRITTEN PERMISSION

PART NO. SEE CHART
DWG. NO. SDA-90152

PART NO.	NO. OF CKTS.	DIM. A	DIM. B (±0.00 / ±0.30 / ±.000 / ±.012)	NO. PER TUBE
90152-XX04	4	(2.54) .100	(5.08) .200	110
▲ ▲ 06	6	(5.08) .200	(7.62) .300	73
08	8	(7.62) .300	(10.16) .400	55
10	10	(10.16) .400	(12.70) .500	44
12	12	(12.70) .500	(15.24) .600	36
14	14	(15.24) .600	(17.78) .700	31
16	16	(17.78) .700	(20.32) .800	27
18	18	(20.32) .800	(22.86) .900	24
20	20	(22.86) .900	(25.40) 1.000	22
22	22			20
24	24	(27.94) 1.100	(30.48) 1.200	18
26	26	(30.48) 1.200	(33.02) 1.300	16
28	28			14
30	30	(35.56) 1.400	(38.10) 1.500	14
32	32			13
34	34	(40.64) 1.600	(43.18) 1.700	12
36	36	(43.18) 1.700	(45.72) 1.800	12
38	38	(45.72) 1.800	(48.26) 1.900	11
40	40	(48.26) 1.900	(50.80) 2.000	11
42	42			10
44	44	(53.34) 2.100	(55.88) 2.200	10
46	46			10
48	48			9
50	50	(60.96) 2.400	(63.50) 2.500	8
52	52			8
54	54			8
56	56	(68.58) 2.700	(71.12) 2.800	7
58	58			7
60	60	(73.66) 2.900	(76.20) 3.000	7
▼ ▼ 62	62			6
90152-XX64	64	(78.74) 3.100	(81.28) 3.200	5

PLATING VERSION A

PRE-PLATED HOT DIP TIN
1.0 TO 2.5 microns (.00004" TO .00010").

PLATING VERSION E

1.27 TO 1.78 microns (.00005" TO .00007") NICKEL
OVERALL, 0.38 TO 0.64 microns (.000015" TO .000025")
GOLD ON CONTACT AREA (OVER NICKEL).
3 TO 5 microns (.00012" TO .00020") TIN
ON SOLDER TAILS (OVER NICKEL).

PLATING VERSION F.

1.27 TO 1.78 microns (.00005" TO .00007") NICKEL
OVERALL, 0.76 TO 1.0 microns (.00003" TO .00004")
GOLD ON CONTACT AREA (OVER NICKEL).
3 TO 5 microns (.00012" TO .00020") TIN
ON SOLDER TAILS (OVER NICKEL).

PLATING VERSION G.

1.27 TO 1.78 microns (.00005" TO .00007") NICKEL
OVERALL, 0.125 TO 0.20 microns (.000005" TO .0000079")
GOLD ON CONTACT AREA (OVER NICKEL).
3 TO 5 microns (.00012" TO .00020") TIN
ON SOLDER TAILS (OVER NICKEL).

90152-XXYY

- XX — INDICATES NO. OF CIRCUITS.
- YY — PLATING CODE.
  - 21 = VERSION A.
  - 22 = VERSION E.
  - 23 = VERSION F.
  - 25 = VERSION G.

STANDARD PRODUCTS

FOR PREVIOUS DRAWING ISSUES SEE MRI.

REV	DESCRIPTION	EC NO.	DRWN	CH'K	APPR	DATE
AD	LEAD FREE CONVERSION NEW BORDER ADDED	E2004-0610	PSHEAHAN			08/01/2004

QUALITY SYMBOLS
MAJOR ▼ =
CRITICAL (C) =

GENERAL TOLERANCES: (UNLESS SPECIFIED)

	mm	INCH
4 PLACES	±0.	±.
3 PLACES	±0.	±.
2 PLACES	±0.	±.
1 PLACE	±0.	±.
ANGULAR: ±	°	

DRAFT WHERE APPLICABLE MUST REMAIN WITHIN DIMENSIONS

SCALE 5:1 | DESIGN UNITS [X] mm [ ] INCH | THIRD ANGLE PROJECTION | DIMENSIONS: [ ] mm/INCH [ ] INCH/mm [ ] mm ONLY | SHT | REV | REVISE ON CAD ONLY

DRAWN BY & DATE: DB 14/ 7/87
CHECKED BY & DATE:
APPROVED BY & DATE:
CAD FILENAME: S90152X2 DGN

TITLE: C-GRID III DUAL ROW HORIZONTAL P.C. BOARD CONNECTOR

MOLEX INCORPORATED

MATERIAL NO.: SEE CHART
DRAWING NO.: SDA-90152
SHEET NO.: 20F
SIZE: B

THIS DRAWING CONTAINS INFORMATION THAT IS PROPRIETARY TO MOLEX INCORPORATED AND SHOULD NOT BE USED WITHOUT WRITTEN PERMISSION.