REV.	DATE		APPROVED
A	3/14/03	CREATED FROM DWG 5445 ASS'Y. PER EXISTING DESIGN OUTLINE.	
B	11/14/03	REVISED TITLE BLOCK, NOTES.	

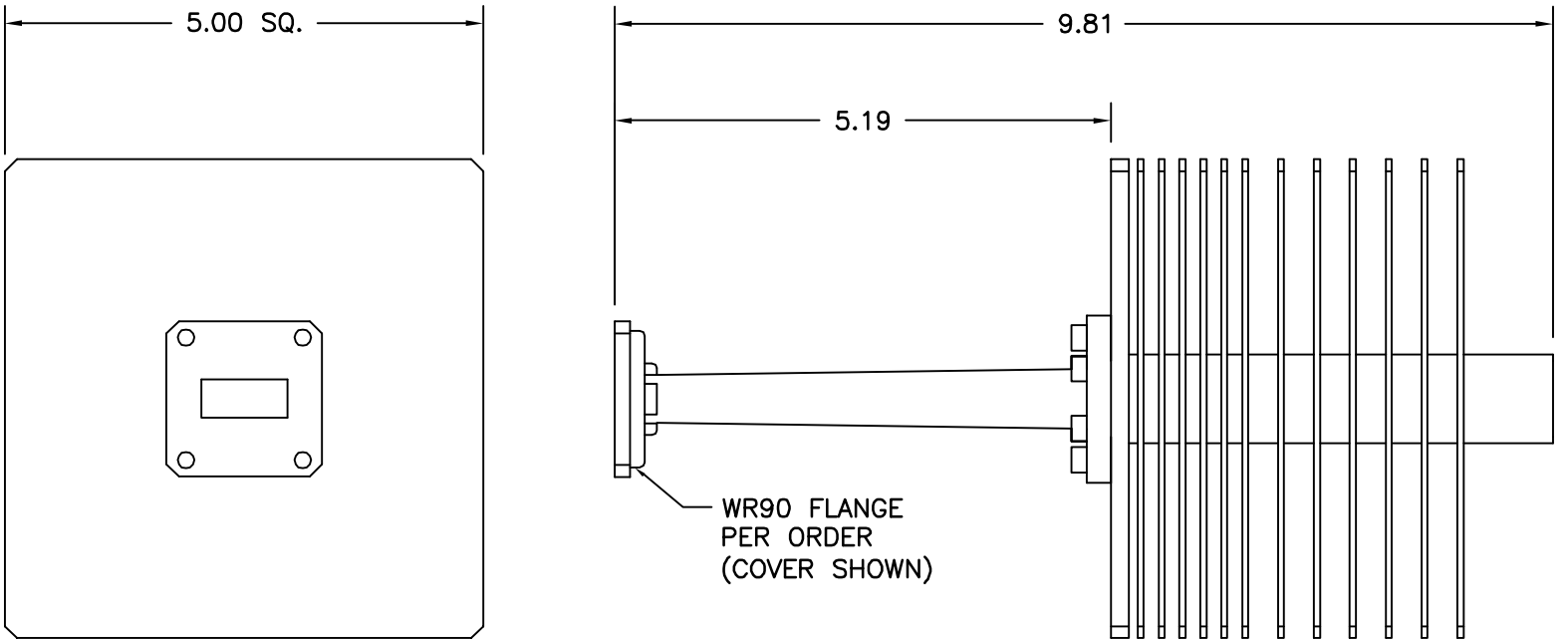

PERFORMANCE SPECIFICATIONS

MODEL CODE:	90–760–FLANGE TYPE*
WG SIZE:	WR90 ALUM.
FREQ. RANGE:	8.2 – 12.4 GHz
POWER:	1500W AVG.
MAX. VSWR:	1.15 MAX.
FLANGE TYPE:	SEE TABLE

*ATM MODEL # DESIGNATION FOR COMMON FLANGE TYPES
1 = CPRG
2 = CPRF
6 = UG COVER
7 = UG CHOKE
8 = SPECIAL

MATERIAL 6061/T-6 ALUM.	TREATMENT –	DRAWN R. LYNCH	DATE 11/14/03
FINISH HI-TEMP BLACK	MOD NO. 90-760-X	CHECKED	DATE
		APPROVED	DATE
		CAGE CODE: OR8N4	DO NOT SCALE DWG

OUTLINE, WR90 '760' SERIES VERY HIGH POWER TERMINATION

ADVANCED TECHNICAL MATERIALS, INC.
49 RIDER AVE., PATCHOGUE N.Y. 11772
TEL: (631) 289-0363 FAX: (631) 289-0358
http://www.atmmicrowave.com

PROPRIETARY NOTICE:
THE INFORMATION IN THIS DRAWING IS PROPRIETARY AND SHALL NOT BE USED OR DISCLOSED WITHOUT THE PRIOR WRITTEN CONSENT OF ATM, INC.

UNLESS OTHERWISE NOTED DIMENSIONS ARE IN INCHES TOLERANCES ARE: FRACTIONS ±1/64 DECIMALS ±.01 ±.005 ANGLES ±1/2°

SHEET.	SCALE	DWG. NO.	REV.
1/1	1 : 2	5446W	B