893-008
Circular Breakaway, Rear Panel Mount Receptacle Connector with Straight PCB Termination

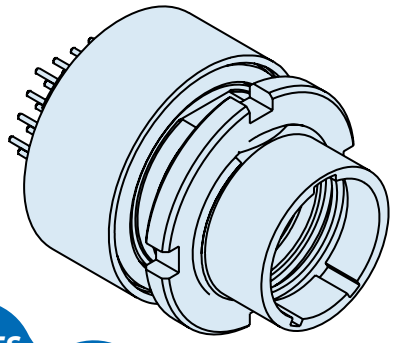

MATES WITH 892-007

Glenair Rear Panel Mount Breakaway Receptacle Connectors feature gold alloy TwistPin contacts, offering premium performance and reliability for demanding applications.

Choose Aluminum or Stainless Steel Shells in 6 layouts from 4 to 55 contacts. These connectors are intermateable with nanominiature plug connectors 892-007 plug connectors.

Pre-Tinned PC Tails are coated with Sn63-Pb37 tin-lead for excellent solderability.

Material/Finish:

- Shell/spanner nut - see part number breakdown
- Insulator - LCP/na
- Socket contacts - gold alloy
- O-rings - fluorosilicone/na
- Internal latching spring - stainless steel/gold plated
- PCB tray(s) - LCP/na
- PC tails - copper alloy/pre-tinned Sn63/Pb37

C

How To Order Circular Nano Connectors

Sample Part Number	893	-008	1-7	N	A2	-0	D3	-S1

Series	**893** - Nano Circular with PCB Termination
Shell Style	**008** - Rear Panel Mount Breakaway Receptacle
Shell Size/Contact Arrangement	**1-4** - Shell Size 1 with 4 contacts **1-7** - Shell Size 1 with 7 contacts **2-19** - Shell Size 2 wih 19 contacts **3-37** - Shell Size 3 with 37 contacts **4-44** - Shell Size 4 with 44 contacts **4-55** - Shell Size 4 with 55 contacts **See Table I**
Polarization	**N** - Normal **A** - Alternate
Shell Material/Finish	**A2** - Aluminum/Electroless Nickel **A5**- Aluminum/Gold Over Nickel **S1** - Stainless Steel/Zinc Cobalt (Black) **S2** - Stainless Steel/Passivated
Wire Gauge	**0** - 30 AWG
Wire Type	**D3** - Single Strand Copper Alloy Wire Uninsulated, Pre-tinned
PC Tail Length (inches)	**S1** - .080" Straight Lead **S2** - .110" Straight Lead **S3** - .140" Straight Lead **S4** - .170" Straight Lead

Table I: 893 Circular Receptacle Mating Face Views

Size 1-4 4 Contacts	Size 1-7 7 Contacts	Size 2-19 19 Contacts	Size 3-37 37 Contacts	Size 4-44 44 Contacts	Size 4-55 55 Contacts
	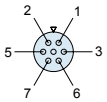	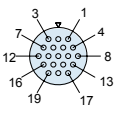	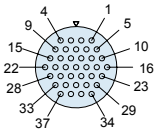	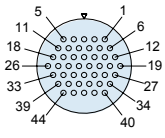	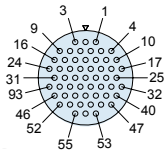

Dimensions in inches (millimeters) and are subject to change without notice.

© 2013 Glenair, Inc.

GLENAIR, INC. • 1211 AIR WAY • GLENDALE, CA 91201-2497 • 818-247-6000 • FAX 818-500-9912
www.glenair.com **E-Mail: sales@glenair.com**

893-008
Circular Breakaway, Rear Panel Mount Receptacle Connector with Straight PCB Termination

Table II: Dimensions

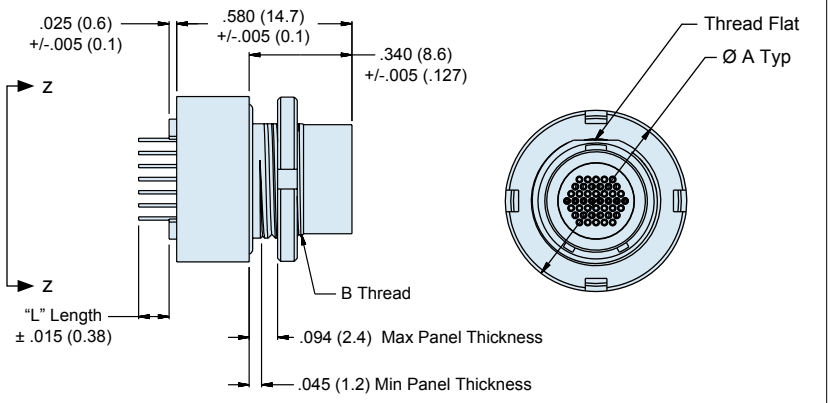

Size	Ø A +/-.005	B Thread
1-4	.429 (10.9)	M7.0 x 0.75 - 6g
1-7	.429 (10.9)	M7.0 x 0.75 - 6g
2-19	.488 (12.4)	M8.5 x 0.75 - 6g
3-37	.528 (13.4)	M9.5 x 0.75 - 6g
4-44	.567 (14.5)	M10.5 x 0.75 - 6g
4-55	.567 (14.5)	M10.5 x 0.75 - 6g

Table III: Rear Panel Mount Panel Cut-Out

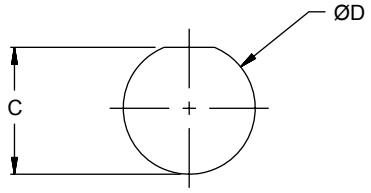

Size	C +.002/-.001	Ø D +.002/-.001
1-4	.260 (6.7)	.280 (7.1)
1-7	.260 (6.7)	.280 (7.1)
2-19	.318 (7.8)	.340 (8.7)
3-37	.361 (9.2)	.378 (9.6)
4-44	.401 (10.2)	.398 (10.7)
4-55	.401 (10.2)	.398 (10.7)

Table IV: Recommended PCB Arrangements Per View Z ◄► Z

Size 1-4

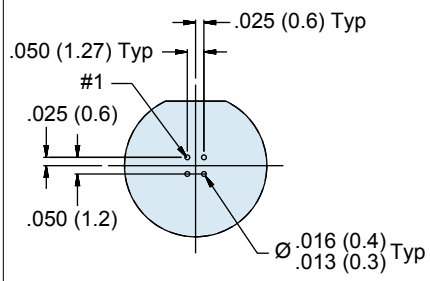

Size 1-7

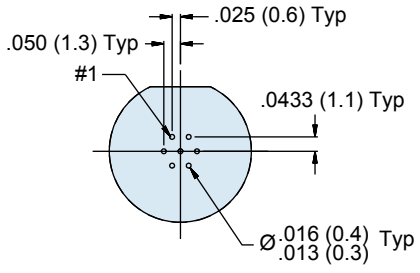

Size 2-19

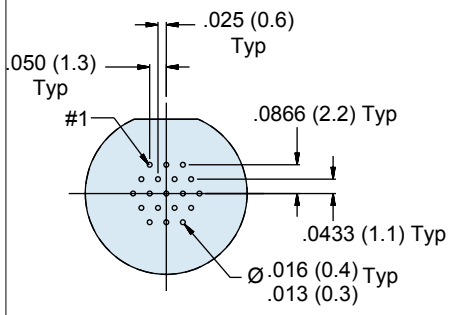

Size 3-37

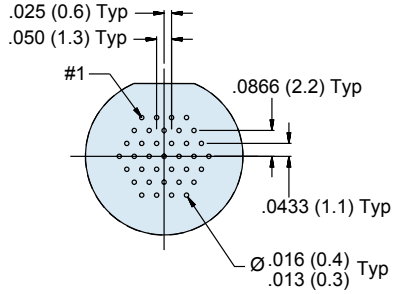

Size 4-44

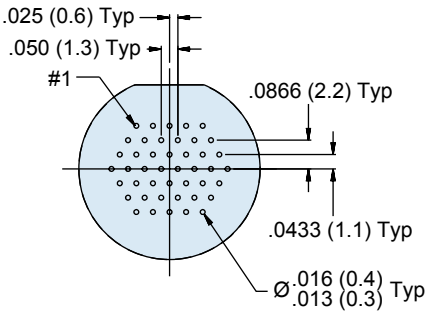

Size 4-55

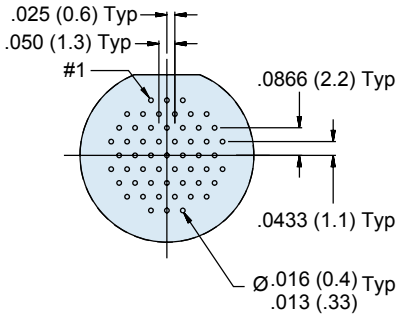

Dimensions in inches (millimeters) and are subject to change without notice.

© 2013 Glenair, Inc.