molex
one company > a world of innovation

This document was generated on 05/20/2010

# PLEASE CHECK WWW.MOLEX.COM FOR LATEST PART INFORMATION

**Part Number:** 0879781031

**Status:** Active

**Description:** 1.00mm (.039") Pitch DDR-2 DIMM Socket, Vertical, with Beveled Metal Pins, Very Low Profile Black Latches, 240 Circuits, 1.8V Center Voltage Key, 3.18mm (.125") Tail Length, 0.03µm (1µ") Gold (Au) Plating, Lead-free

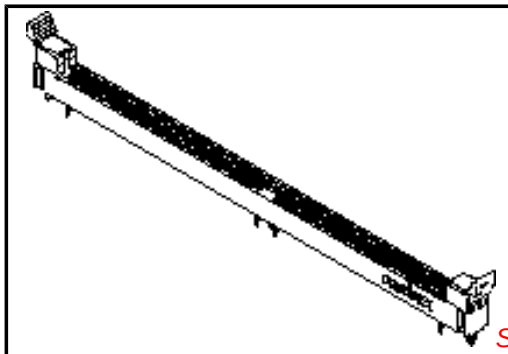

*Series image - Reference only*

**Documents:**

3D Model
Drawing (PDF)
Product Specification PS-87978-001 (PDF)
RoHS Certificate of Compliance (PDF)

## Agency Certification

| | |
|---|---|
| CSA | LR19980 |
| UL | E29179 |

## General

| | |
|---|---|
| Product Family | Memory Module Sockets |
| Series | 87978 |
| Comments | <LI> Latches in Black Color |
| Component Type | Memory Module |
| JEDEC Outline | N/A |
| Product Name | DDR2 DIMM |

## Physical

| | |
|---|---|
| Circuits (Loaded) | 240 |
| Color - Resin | Black |
| Durability (mating cycles max) | 25 |
| Entry Angle | Vertical (Top Entry) |
| Flammability | 94V-0 |
| Keying to Mating Part | Yes |
| Material - Metal | Brass, Phosphor Bronze |
| Material - Plating Mating | Gold |
| Material - Plating Termination | Tin |
| Material - Resin | High Temperature Thermoplastic |
| PC Tail Length (in) | 0.125 In |
| PC Tail Length (mm) | 3.18 mm |
| PCB Retention | Yes |
| PCB Thickness Recommended (in) | 0.093 In |
| PCB Thickness Recommended (mm) | 2.40 mm |
| Packaging Type | Tray |
| Pitch - Mating Interface (in) | 0.039 In |
| Pitch - Mating Interface (mm) | 1.00 mm |
| Plating min: Mating (µin) | 2 |
| Plating min: Mating (µm) | 0.05 |
| Plating min: Termination (µin) | 101.6 |
| Plating min: Termination (µm) | 2.54 |
| Temperature Range - Operating | -10°C to +85°C |
| Termination Interface: Style | Through Hole |

## Electrical

| | |
|---|---|
| Current - Maximum per Contact | 0.5A |
| Voltage - Maximum | 30V |
| Voltage Key | 1.8V, Center |

## Solder Process Data

| | |
|---|---|
| Duration at Max. Process Temperature (seconds) | 10 |
| Lead-free Process Capability | Wave Capable (TH only) |
| Max. Cycles at Max. Process Temperature | 1 |

**EU RoHS**
ELV and RoHS Compliant
**REACH SVHC**
Contains SVHC: No
**Halogen-Free Status**
Not Reviewed

**China RoHS**

**Need more information on product environmental compliance?**

Email productcompliance@molex.com
For a multiple part number RoHS Certificate of Compliance, click here

Please visit the Contact Us section for any non-product compliance questions.

**Search Parts in this Series**
87978Series

**Mates With**
JEDEC standard 1.27mm modules

| | |
|---|---|
| Process Temperature max. C | 265 |

## Material Info

## Reference - Drawing Numbers

| | |
|---|---|
| Product Specification | PS-87978-001, RPS-87978-001 |
| Sales Drawing | SD-87978-001 |

This document was generated on 05/20/2010

**PLEASE CHECK WWW.MOLEX.COM FOR LATEST PART INFORMATION**

NOTES:

1. MATERIALS
   HOUSING - HIGH TEMP. NYLON GLASS FILLED, UL 94 V-0, BLACK.
   EJECTOR - HIGH TEMP. NYLON GLASS FILLED, UL 94 V-0, BLACK.
   TERMINAL - COPPER ALLOY
2. PLATING - SEE TABLE IN SHEET 5.
3. CARD SLOT ACCEPTS 1.27±0.10 MM MODULE THICKNESS.
   (MEASURED OVER P.C. PADS)
4. RECOMMENDED MODULE LAYOUT SHALL BE AS PER JEDEC MO-237.
5. REFER TO PRODUCT SPEC. PS-87978-013 FOR PERFORMANCE SPECIFICATIONS.
6. PRODUCT SHALL BE PACKED IN TRAY.
7. PRODUCT SHALL HAVE DATE CODE STAMPED ON SIDE OF HOUSING.
8. KEEP OUT AREA IS THE AREA WHERE THE CONNECTOR IS MOUNTED ONTO THE PCB WHICH DOES NOT INCLUDE THE LATCH.
9. REFER TO CRITICAL JEDEC INFORMATION FOR SOCKET OUTLINE PER SO-001.
10. DIMM MODULE SEATING PLANE FROM TOP OF PCB.
11. CONTACT MOLEX FOR AVAILABILITY OF PRODUCT OPTIONS.
12. PART NUMBER SHALL BE MARKED LEGIBLY AS 87978-****

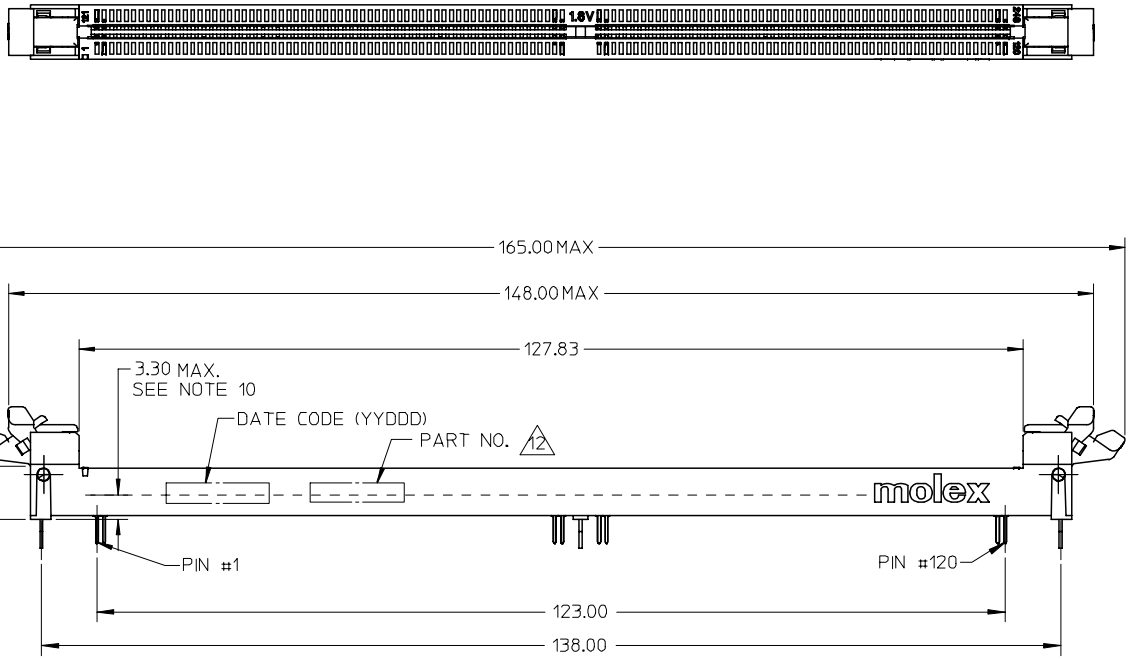


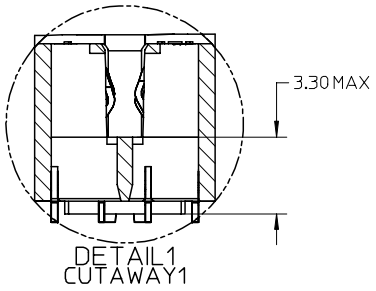


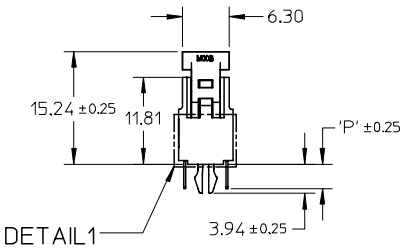


| REVISED | | | | REV | DESCRIPTION |
|---|---|---|---|---|---|
| EC NO: S2008-0235 | DRWN:CMTEO | CHKD:CCTEH | APPR:SHLENI | | |
| | 2007/09/27 | 2007/09/27 | 2007/09/28 | B | |

QUALITY SYMBOLS
▼=0
Ⓒ=0

GENERAL TOLERANCES (UNLESS SPECIFIED)

| | mm | INCH |
|---|---|---|
| 4 PLACES | ± --- | ± --- |
| 3 PLACES | ± --- | ± --- |
| 2 PLACES | ± 0.20 | ± --- |
| 1 PLACE | ± --- | ± --- |
| ANGULAR ± 5 ° | | |

DRAFT WHERE APPLICABLE MUST REMAIN WITHIN DIMENSIONS

| | |
|---|---|
| DIMENSION STYLE | MM ONLY |
| SCALE | NTS |
| DESIGN UNITS | METRIC |
| | THIRD ANGLE PROJECTION |
| DRAWN BY | CCTEH |
| DATE | 2005/01/03 |
| CHECKED BY | SRRAMESH |
| DATE | 2005/08/30 |
| APPROVED BY | GGLEE |
| DATE | 2005/08/30 |
| MATERIAL NO. | SEE TABLE |
| TITLE | DDR2 DIMM, 1MM PITCH 240 CKTS, FORK-LOCK VERS VLP LATCH |
| | MOLEX INCORPORATED |
| DOCUMENT NO. | SD-87978-001 |
| SHEET NO. | 1 OF 5 |
| SIZE | A3 |

THIS DRAWING CONTAINS INFORMATION THAT IS PROPRIETARY TO MOLEX INCORPORATED AND SHOULD NOT BE USED WITHOUT WRITTEN PERMISSION

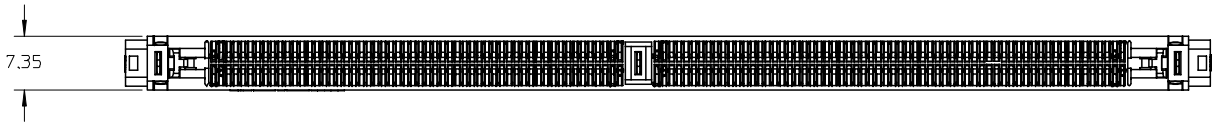


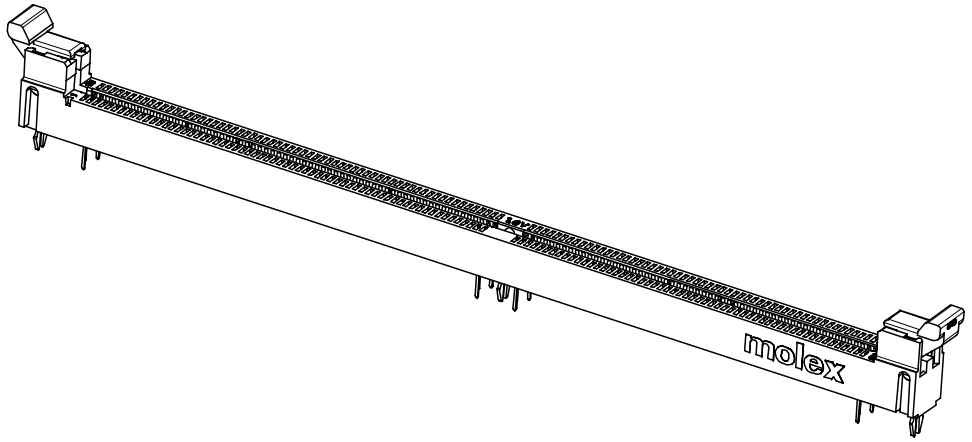


| REVISED | | | | |
|---|---|---|---|---|
| EC NO: S2008-0235 | DRWN:CMTEO | CHKD:CCTEH | APPR:SHLENI | DESCRIPTION |
| 2007/09/27 | 2007/09/27 | 2007/09/27 | 2007/09/28 | |
| B | | | | REV |

QUALITY SYMBOLS
▼=0
▽(C)=0

GENERAL TOLERANCES (UNLESS SPECIFIED)

| | mm | INCH |
|---|---|---|
| 4 PLACES | ± --- | ± --- |
| 3 PLACES | ± --- | ± --- |
| 2 PLACES | ± 0.20 | ± --- |
| 1 PLACE | ± --- | ± --- |
| ANGULAR ± 5 ° | | |

DRAFT WHERE APPLICABLE MUST REMAIN WITHIN DIMENSIONS

| | |
|---|---|
| DIMENSION STYLE | MM ONLY |
| SCALE | NTS |
| DESIGN UNITS | METRIC |
| | THIRD ANGLE PROJECTION |
| DRAWN BY | CCTEH |
| DATE | 2005/01/03 |
| CHECKED BY | SRRAMESH |
| DATE | 2005/08/30 |
| APPROVED BY | GGLEE |
| DATE | 2005/08/30 |
| MATERIAL NO. | SEE TABLE |
| TITLE | DDR2 DIMM, 1MM PITCH 240 CKTS, FORK-LOCK VERS VLP LATCH |
| | MOLEX INCORPORATED |
| DOCUMENT NO. | SD-87978-001 |
| SHEET NO. | 2 OF 5 |
| SIZE | A3 |

THIS DRAWING CONTAINS INFORMATION THAT IS PROPRIETARY TO MOLEX INCORPORATED AND SHOULD NOT BE USED WITHOUT WRITTEN PERMISSION

## RECOMMENDED MODULE LAYOUT

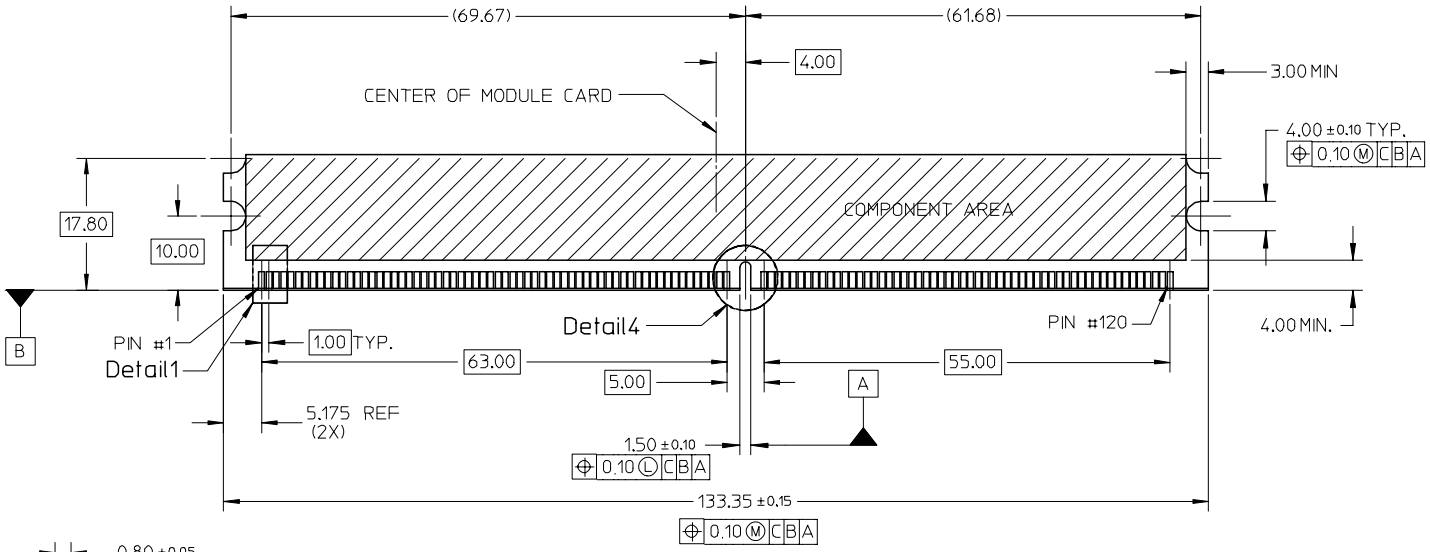


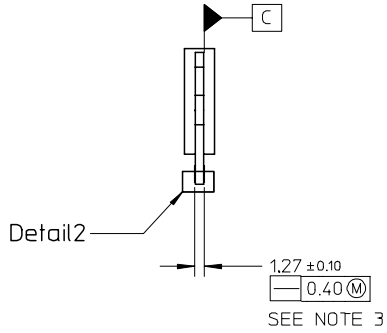


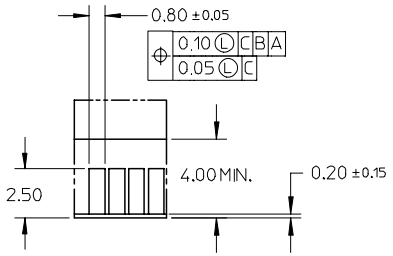


Detail1

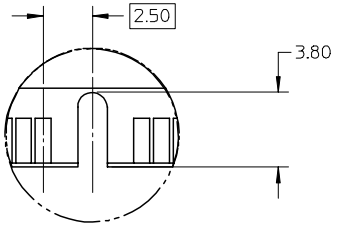


Detail4

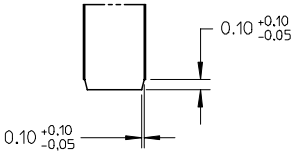


Detail2

| KEY LOCATION | VOLTAGE |
|---|---|
| CENTER | 1.8V |

NOTES:
1. MODULE CARD USED FOR TESTS ARE WITH 0.10MM CHAMFER.

REVISED
EC NO: S2008-0235 2007/09/27
DRWN:CMTEO 2007/09/27
CHKD:CCTEH 2007/09/28
APPR:SHLENI
DESCRIPTION
REV
B

QUALITY SYMBOLS
▼=0
▽C=0

GENERAL TOLERANCES (UNLESS SPECIFIED)

| | mm | INCH |
|---|---|---|
| 4 PLACES | ± --- | ± --- |
| 3 PLACES | ± --- | ± --- |
| 2 PLACES | ± 0.20 | ± --- |
| 1 PLACE | ± --- | ± --- |

ANGULAR ± 5 °

DRAFT WHERE APPLICABLE MUST REMAIN WITHIN DIMENSIONS

DIMENSION STYLE: MM ONLY
SCALE: NTS
DESIGN UNITS: METRIC
THIRD ANGLE PROJECTION

DRAWN BY: CCTEH DATE: 2005/01/03
CHECKED BY: SRRAMESH DATE: 2005/08/30
APPROVED BY: GGLEE DATE: 2005/08/30

TITLE: DDR2 DIMM, 1MM PITCH 240 CKTS, FORK-LOCK VERS VLP LATCH

MOLEX INCORPORATED

MATERIAL NO.: SEE TABLE
DOCUMENT NO.: SD-87978-001
SHEET NO.: 3 OF 5
SIZE: A3

THIS DRAWING CONTAINS INFORMATION THAT IS PROPRIETARY TO MOLEX INCORPORATED AND SHOULD NOT BE USED WITHOUT WRITTEN PERMISSION

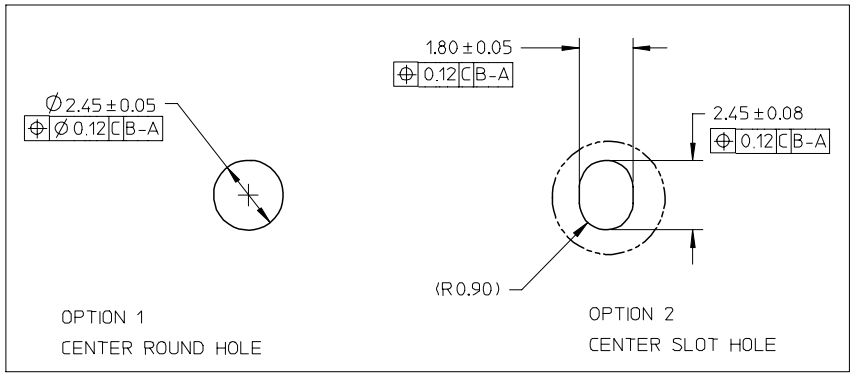


Detail3

(SEE RECOMMENDED THICKNESS IN TABLE)
RECOMMENDED PCB LAYOUT
CONNECTOR SIDE

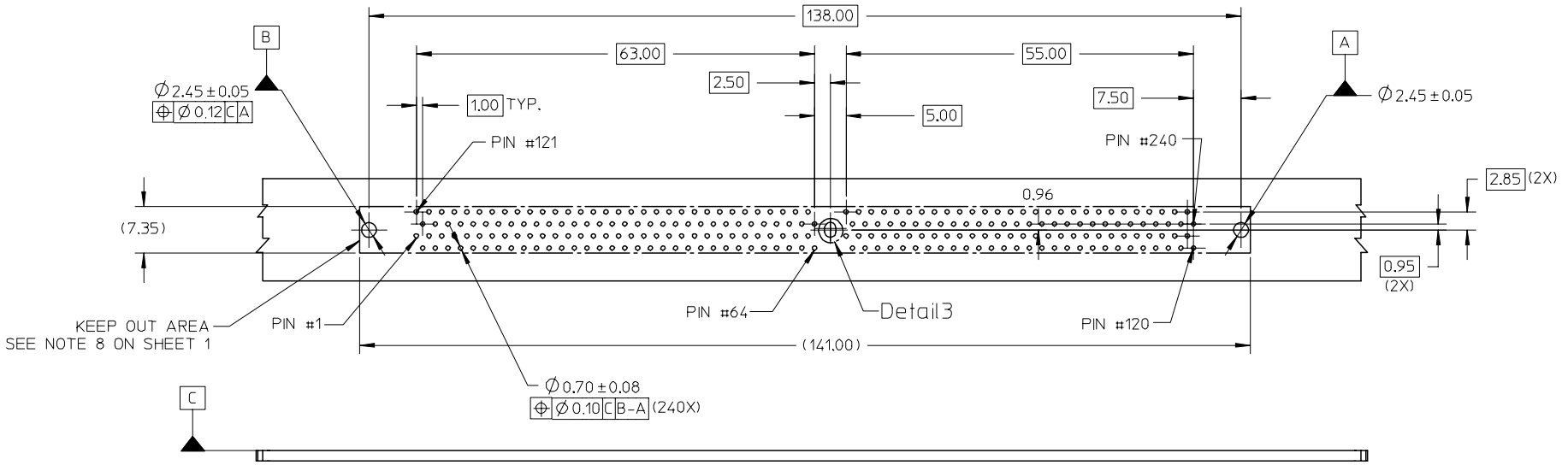


| REVISED | EC NO: | DESCRIPTION | REV |
|---|---|---|---|
| | S2008-0235 | | B |
| DRWN: CMTEO | 2007/09/27 | | |
| CHKD: CCTEH | 2007/09/27 | | |
| APPR: SHLENI | 2007/09/28 | | |

QUALITY SYMBOLS
▼=0
Ⓒ=0

GENERAL TOLERANCES (UNLESS SPECIFIED)

| | mm | INCH |
|---|---|---|
| 4 PLACES | ± --- | ± --- |
| 3 PLACES | ± --- | ± --- |
| 2 PLACES | ± 0.20 | ± --- |
| 1 PLACE | ± --- | ± --- |
| ANGULAR ± 5 ° | | |

DRAFT WHERE APPLICABLE MUST REMAIN WITHIN DIMENSIONS

| | | | |
|---|---|---|---|
| DIMENSION STYLE: MM ONLY | SCALE: NTS | DESIGN UNITS: METRIC | THIRD ANGLE PROJECTION |
| DRAWN BY: CCTEH | DATE: 2005/01/03 | | |
| CHECKED BY: SRRAMESH | DATE: 2005/08/30 | | |
| APPROVED BY: GGLEE | DATE: 2005/08/30 | | |
| MATERIAL NO.: SEE TABLE | | | |

TITLE: DDR2 DIMM, 1MM PITCH
240 CKTS, FORK-LOCK VERS
VLP LATCH

molex MOLEX INCORPORATED

DOCUMENT NO.: SD-87978-001
SHEET NO.: 4 OF 5

SIZE: A3

THIS DRAWING CONTAINS INFORMATION THAT IS PROPRIETARY TO MOLEX INCORPORATED AND SHOULD NOT BE USED WITHOUT WRITTEN PERMISSION

| PART NO. | KEY POS. | DIM 'P' | RECOMMENDED PCB THICKNESS | PLATING OPTION | LATCH COLOR |
|---|---|---|---|---|---|
| 87978-0021 | CENTER (1.8V) | 2.67 | 1.57 | 0.38uM / 15 uIN MIN. GOLD ON CONTACT, 2.54uM/ 100uIN MIN. TIN ON SOLDERTAILS, 1.27uM/ 50uIN MIN. NICKEL UNDERPLATE | BLACK |
| 87978-1021 | CENTER (1.8V) | 3.18 | 2.36 | | |
| 87978-0031 | CENTER (1.8V) | 2.67 | 1.57 | 0.03uM / 1 uIN MIN. GOLD ON CONTACT, 2.54uM/ 100uIN MIN. TIN ON SOLDERTAILS, 1.27uM/ 50uIN MIN. NICKEL UNDERPLATE | |
| 87978-1031 | CENTER (1.8V) | 3.18 | 2.36 | | |
| 87978-0051 | CENTER (1.8V) | 2.67 | 1.57 | 0.76uM / 30 uIN MIN. GOLD ON CONTACT, 2.54uM/ 100uIN MIN. TIN ON SOLDERTAILS, 1.27uM/ 50uIN MIN. NICKEL UNDERPLATE | |
| 87978-1051 | CENTER (1.8V) | 3.18 | 2.36 | | |

REVISED
EC NO: S2008-0235 2007/09/27
DRWN:CMTEO 2007/09/27
CHKD:CCTEH 2007/09/28
APPR:SHLENI
DESCRIPTION
REV B

QUALITY SYMBOLS
▼=0
Ⓒ▽=0

GENERAL TOLERANCES (UNLESS SPECIFIED)

| | mm | INCH |
|---|---|---|
| 4 PLACES | ± --- | ± --- |
| 3 PLACES | ± --- | ± --- |
| 2 PLACES | ± 0.20 | ± --- |
| 1 PLACE | ± --- | ± --- |

ANGULAR ± 5 °

DRAFT WHERE APPLICABLE MUST REMAIN WITHIN DIMENSIONS

DIMENSION STYLE: MM ONLY
SCALE: NTS
DESIGN UNITS: METRIC
THIRD ANGLE PROJECTION

DRAWN BY: CCTEH DATE: 2005/01/03
CHECKED BY: SRRAMESH DATE: 2005/08/30
APPROVED BY: GGLEE DATE: 2005/08/30

TITLE: DDR2 DIMM, 1MM PITCH 240 CKTS, FORK-LOCK VERS VLP LATCH

molex MOLEX INCORPORATED

MATERIAL NO.: SEE TABLE
DOCUMENT NO.: SD-87978-001
SHEET NO.: 5 OF 5
SIZE: A3

THIS DRAWING CONTAINS INFORMATION THAT IS PROPRIETARY TO MOLEX INCORPORATED AND SHOULD NOT BE USED WITHOUT WRITTEN PERMISSION