This document was generated on 04/13/2010

**PLEASE CHECK WWW.MOLEX.COM FOR LATEST PART INFORMATION**

**Part Number:** 0879180201

**Status:** Active

**Description:** 0.60mm (.024") Pitch miniDIMM DDR2 Socket, Surface Mount, Right Angle, 1.8V Key, 200 Circuits, Lead-free

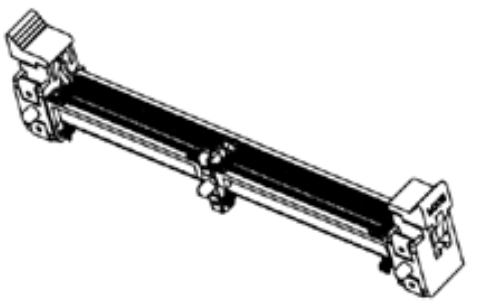

*Series image - Reference only*

**Documents:**

3D Model
Drawing (PDF)
Product Specification PS-87918-001 (PDF)
RoHS Certificate of Compliance (PDF)

## Agency Certification

| | |
|---|---|
| CSA | LR19980 |
| UL | E29179 |

## General

| | |
|---|---|
| Product Family | Memory Module Sockets |
| Series | 87918 |
| Comments | <LI>Latches in Off-White Color |
| Component Type | Socket |
| JEDEC Outline | MO-258 |
| Product Name | MiniDIMM |

## Physical

| | |
|---|---|
| Circuits (Loaded) | 200 |
| Color - Resin | Black, Natural |
| Durability (mating cycles max) | 25 |
| Entry Angle | 90° Angle (Side Entry) |
| Flammability | 94V-0 |
| Keying to Mating Part | Yes |
| Material - Metal | Copper Alloy |
| Material - Plating Mating | Gold |
| Material - Plating Termination | Tin |
| Material - Resin | High Temperature Thermoplastic |
| PCB Locator | Yes |
| PCB Retention | Yes |
| PCB Thickness Recommended (in) | 0.062 In |
| PCB Thickness Recommended (mm) | 1.57 mm |
| Packaging Type | Tray |
| Pitch - Mating Interface (in) | 0.024 In |
| Pitch - Mating Interface (mm) | 0.60 mm |
| Plating min: Mating (µin) | 30 |
| Plating min: Mating (µm) | 0.76 |
| Plating min: Termination (µin) | 100 |
| Plating min: Termination (µm) | 2.54 |
| Temperature Range - Operating | -55°C to +85°C |
| Termination Interface: Style | Surface Mount |

## Electrical

| | |
|---|---|
| Current - Maximum per Contact | 1A |
| Voltage - Maximum | 30V |
| Voltage Key | 1.8V |

## Solder Process Data

| | |
|---|---|
| Duration at Max. Process Temperature (seconds) | 10 |
| Lead-free Process Capability | SMC & Wave Capable (TH only) |
| Max. Cycles at Max. Process Temperature | 2 |
| Process Temperature max. C | 260 |

**EU RoHS**
**ELV and RoHS Compliant**
**REACH SVHC**
Not Reviewed
**Halogen-Free Status**
**Not Reviewed**

**China RoHS**

**Need more information on product environmental compliance?**

Email productcompliance@molex.com
For a multiple part number RoHS Certificate of Compliance, click here

Please visit the Contact Us section for any non-product compliance questions.

**Search Parts in this Series**
87918Series

**Mates With**
JEDEC MO-258 modules

## Material Info

### Reference - Drawing Numbers

| | |
|---|---|
| Product Specification | PS-87918-001 |
| Sales Drawing | SD-87918-001 |

This document was generated on 04/13/2010

**PLEASE CHECK WWW.MOLEX.COM FOR LATEST PART INFORMATION**

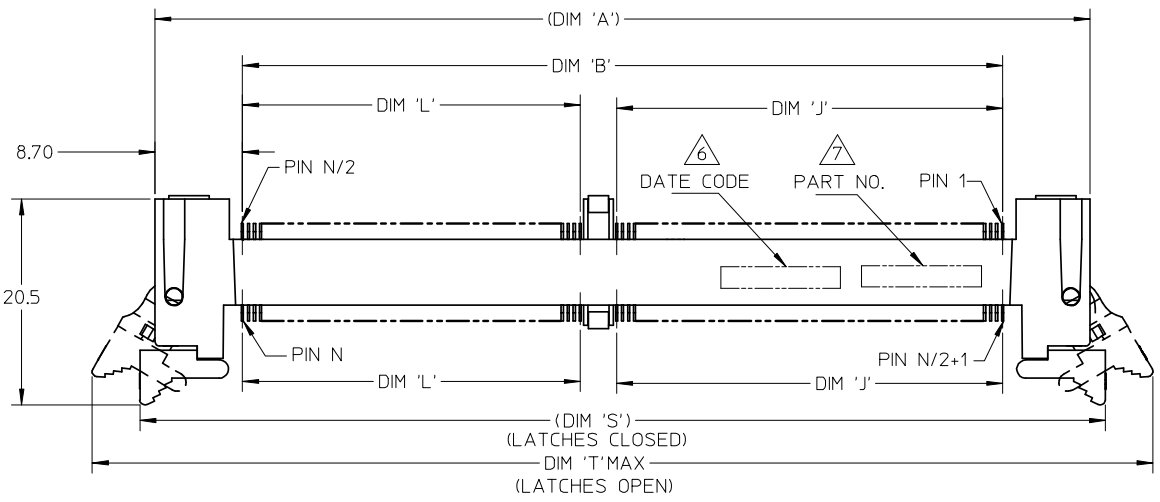


NOTES :

1) MATERIAL :
   HOUSING : HIGH TEMPERATURE LIQUID CRYSTAL POLYMER, UL94V-0
   COLOUR : BLACK
   CONTACTS : COPPER ALLOY
   LATCHES : HIGH TEMPERATURE NYLON, UL94V-0
   COLOUR : NATURAL (OFF-WHITE)
2) FINISH :
   CONTACT AREA : 0.76 MICROMETER (30 MICROINCH) MIN GOLD OVER
   1.25 MICROMETER (50 MICROINCH) MIN NICKEL
   SOLDER LEADS : 2.54 MICROMETER (100 MICROINCH) MIN TIN OVER
   1.25 MICROMETER (50 MICROINCH) MIN NICKEL
3) ACCEPTS 1.0 mm THICK MEMORY MODULE PER JEDEC MO-244
   FOR 244 CKTS AND MO-258 FOR 200 CKTS.
4) PRODUCT SPECIFICATION : PS-87918-001
5) PRODUCT SHALL BE PACKED IN TRAY.

6) DATE CODE SHALL BE MARKED LEGIBLY AS SHOWN :YYDDD

7) PART NUMBER SHALL BE MARKED LEGIBLY AS SHOWN.
   87918-XXXX(REFER TO TABLE)

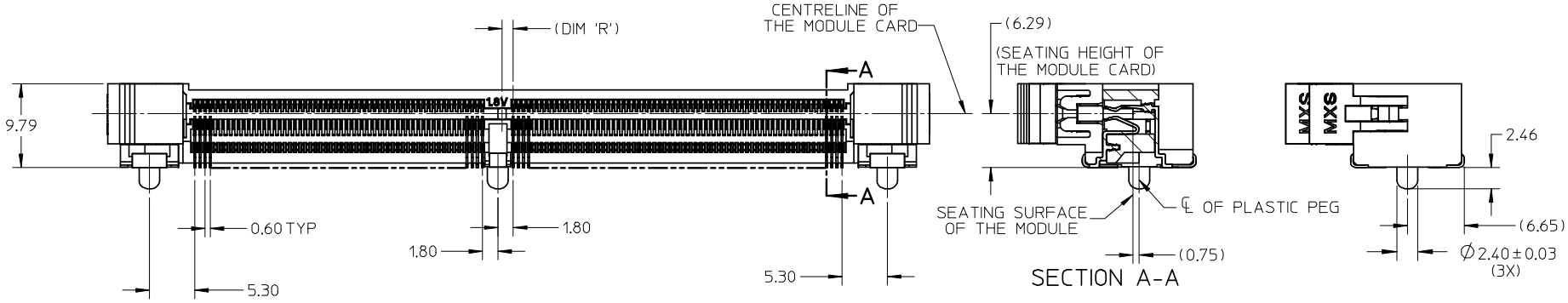


ADD DDR3 OPTION
EC NO: S2008-1057 2008/06/20
DRWN:CMTEO 2008/06/20
CHKD:CGTAN 2008/06/23
APPR:SHLEN1
DESCRIPTION
B2
REV

QUALITY SYMBOLS
▼=0
Ⓒ=0

GENERAL TOLERANCES (UNLESS SPECIFIED)

| | mm | INCH |
|---|---|---|
| 4 PLACES | ± --- | ± --- |
| 3 PLACES | ± --- | ± --- |
| 2 PLACES | ± 0.13 | ± --- |
| 1 PLACE | ± 0.25 | ± --- |
| ANGULAR ± 1 ° | | |

DRAFT WHERE APPLICABLE MUST REMAIN WITHIN DIMENSIONS

DIMENSION STYLE: MM ONLY
SCALE: NTS
DESIGN UNITS: METRIC
THIRD ANGLE PROJECTION

DRAWN BY: EDMUND DATE: 2004/08/17
CHECKED BY: SRRAMESH DATE: 2005/01/25
APPROVED BY: GGLEE DATE: 2005/01/25

TITLE: MINI DIMM, 0.60MM PITCH 244/200 CKTS STANDARD R/A

molex MOLEX INCORPORATED

MATERIAL NO.: SEE TABLE
DOCUMENT NO.: SD-87918-001
SHEET NO.: 1 OF 4
SIZE: A3

THIS DRAWING CONTAINS INFORMATION THAT IS PROPRIETARY TO MOLEX INCORPORATED AND SHOULD NOT BE USED WITHOUT WRITTEN PERMISSION

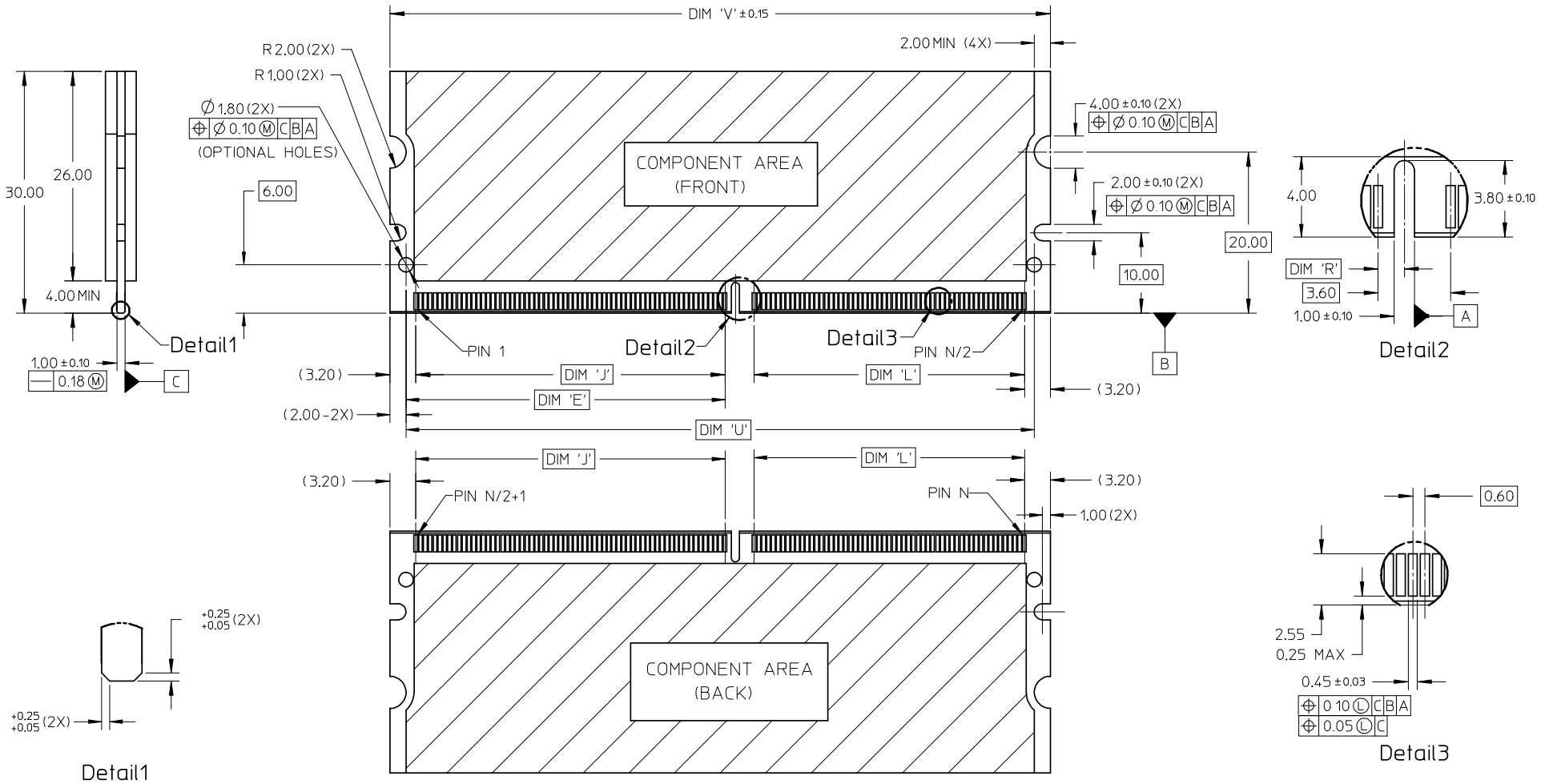


| | | | |
|---|---|---|---|
| ADD DDR3 OPTION | 2008/06/20 | DESCRIPTION | |
| EC NO: S2008-1057 | 2008/06/20 | | |
| DRWN:CMTEO | 2008/06/23 | | |
| CHKD:CGTAN | | | |
| APPR:SHLEN1 | | | |
| B2 | | REV | |

QUALITY SYMBOLS
▼=0
Ⓒ=0

GENERAL TOLERANCES (UNLESS SPECIFIED)

| | mm | INCH |
|---|---|---|
| 4 PLACES | ± --- | ± --- |
| 3 PLACES | ± --- | ± --- |
| 2 PLACES | ± 0.13 | ± --- |
| 1 PLACE | ± 0.25 | ± --- |
| ANGULAR ± 1 ° | | |

DRAFT WHERE APPLICABLE MUST REMAIN WITHIN DIMENSIONS

| | |
|---|---|
| DIMENSION STYLE | MM ONLY |
| SCALE | NTS |
| DESIGN UNITS | METRIC |
| | THIRD ANGLE PROJECTION |
| DRAWN BY | EDMUND |
| DATE | 2004/08/17 |
| CHECKED BY | SRRAMESH |
| DATE | 2005/01/25 |
| APPROVED BY | GGLEE |
| DATE | 2005/01/25 |
| MATERIAL NO. | SEE TABLE |

TITLE: MINI DIMM, 0.60MM PITCH 244/200 CKTS STANDARD R/A

MOLEX INCORPORATED

DOCUMENT NO. SD-87918-001

SHEET NO. 2 OF 4

SIZE A3

THIS DRAWING CONTAINS INFORMATION THAT IS PROPRIETARY TO MOLEX INCORPORATED AND SHOULD NOT BE USED WITHOUT WRITTEN PERMISSION

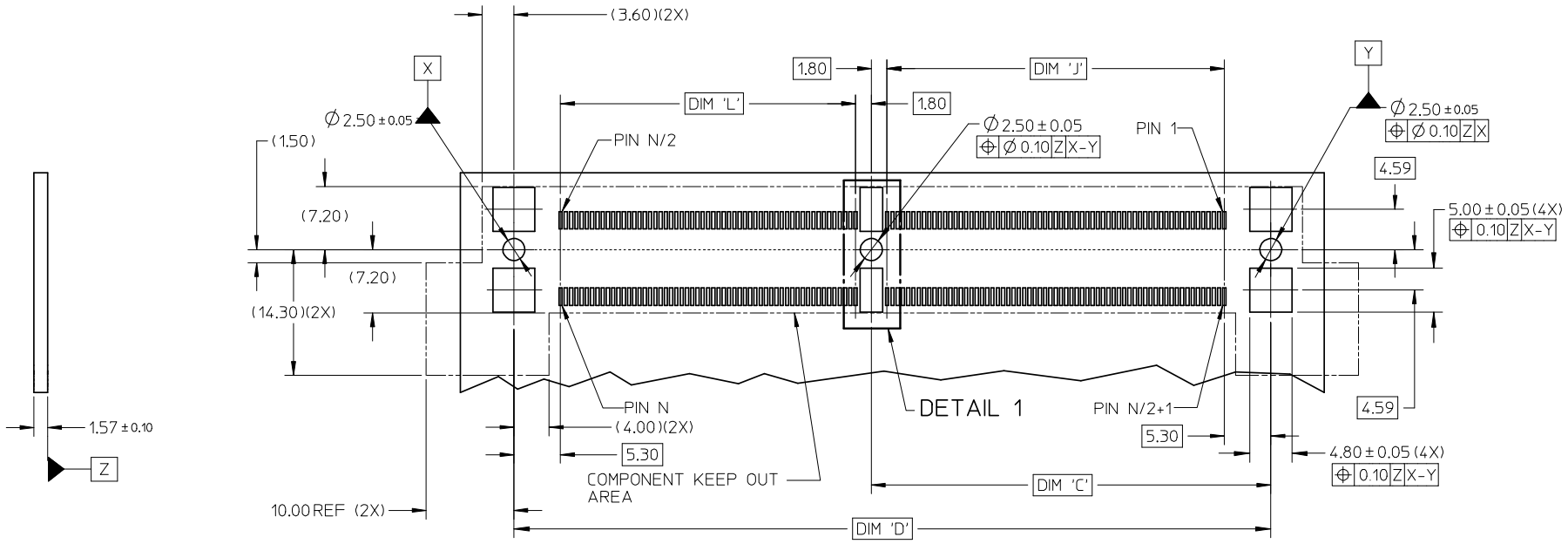


# RECOMMENDED PCB LAYOUT

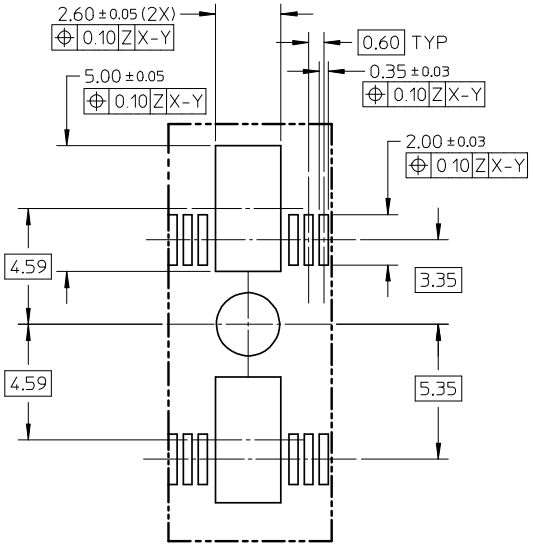


DETAIL1

ADD DDR3 OPTION
EC NO: S2008-1057 2008/06/20
DRWN:CMTEO 2008/06/20
CH'KD:CGTAN 2008/06/23
APPR:SHLEN1
DESCRIPTION
REV
B2

QUALITY SYMBOLS
▼=0
Ⓒ=0

GENERAL TOLERANCES (UNLESS SPECIFIED)

| | mm | INCH |
|---|---|---|
| 4 PLACES | ± --- | ± --- |
| 3 PLACES | ± --- | ± --- |
| 2 PLACES | ± 0.13 | ± --- |
| 1 PLACE | ± 0.25 | ± --- |
| ANGULAR ± 1 ° | | |

DRAFT WHERE APPLICABLE MUST REMAIN WITHIN DIMENSIONS

DIMENSION STYLE: MM ONLY
SCALE: NTS
DESIGN UNITS: METRIC
THIRD ANGLE PROJECTION

DRAWN BY: EDMUND DATE: 2004/08/17
CHECKED BY: SRRAMESH DATE: 2005/01/25
APPROVED BY: GGLEE DATE: 2005/01/25

TITLE: MINI DIMM, 0.60MM PITCH 244/200 CKTS STANDARD R/A

MOLEX INCORPORATED

MATERIAL NO.: SEE TABLE
DOCUMENT NO.: SD-87918-001
SHEET NO.: 3 OF 4
SIZE: A3

THIS DRAWING CONTAINS INFORMATION THAT IS PROPRIETARY TO MOLEX INCORPORATED AND SHOULD NOT BE USED WITHOUT WRITTEN PERMISSION

| CKT SIZE 'N' | PART NUMBER | MODULE CARD | VOLTAGE KEY | DIM 'R' | DIM 'E' | DIM 'J' | DIM 'L' | DIM 'A' | DIM 'S' | DIM 'T' | DIM 'U' | DIM 'V' | DIM 'C' | DIM 'D' | DIM 'B' |
|---|---|---|---|---|---|---|---|---|---|---|---|---|---|---|---|
| 244 | 87918-0001 | DDR2 | 1.8 V | 1.30 | 39.60 | 38.40 | 33.60 | 93.0 | 96.0 | 106.2 | 78.00 | 82.00 | 45.50 | 86.20 | 75.60 |
| | 87918-0301 | DDR3 | 1.5 V | 2.30 | | | | | | | | | | | |
| 200 | 87918-0201 | DDR2 | 1.8 V | 1.30 | 24.60 | 23.40 | 35.40 | 79.8 | 82.8 | 93.0 | 64.80 | 68.80 | 30.50 | 73.00 | 62.40 |
| | 87918-0202 | DDR | 2.5 V | 2.30 | | | | | | | | | | | |

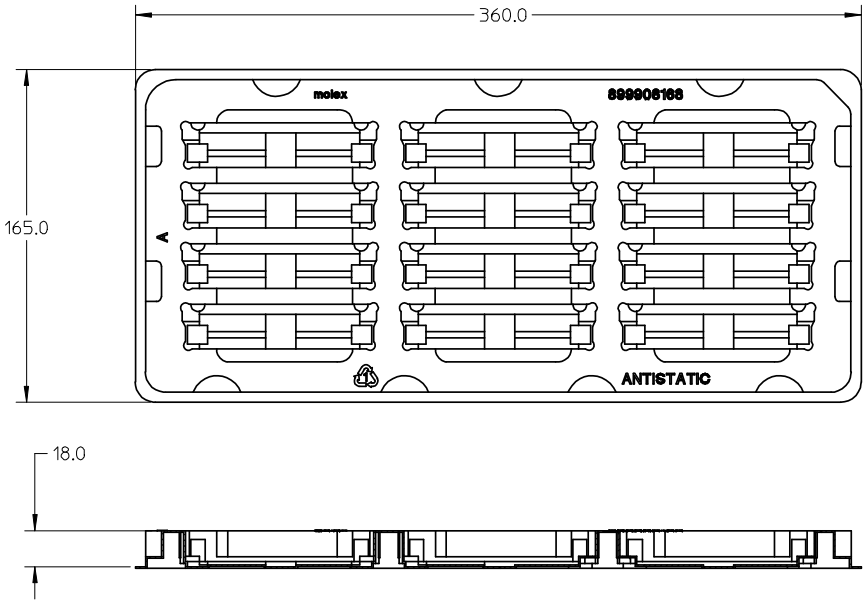


VIEW OF PACKAGING TRAY

NOTES:

1. QTY OF CAVITY: 3 X 4 = 12 PCS

ADD DDR3 OPTION
EC NO: S2008-1057 2008/06/20
DRWN:CMTEO 2008/06/20
CH'KD:CGTAN 2008/06/23
APPR:SHLEN1
DESCRIPTION
REV

B2

QUALITY SYMBOLS
▼=0
Ⓒ=0

GENERAL TOLERANCES (UNLESS SPECIFIED)

| | mm | INCH |
|---|---|---|
| 4 PLACES | ± --- | ± --- |
| 3 PLACES | ± --- | ± --- |
| 2 PLACES | ± 0.13 | ± --- |
| 1 PLACE | ± 0.25 | ± --- |
| ANGULAR ± 1 ° | | |

DRAFT WHERE APPLICABLE MUST REMAIN WITHIN DIMENSIONS

DIMENSION STYLE: MM ONLY
SCALE: NTS
DESIGN UNITS: METRIC
THIRD ANGLE PROJECTION

DRAWN BY: EDMUND DATE: 2004/08/17
CHECKED BY: SRRAMESH DATE: 2005/01/25
APPROVED BY: GGLEE DATE: 2005/01/25

TITLE: MINI DIMM, 0.60MM PITCH 244/200 CKTS STANDARD R/A

MOLEX INCORPORATED

MATERIAL NO.: SEE TABLE
DOCUMENT NO.: SD-87918-001
SHEET NO.: 4 OF 4
SIZE: A3

THIS DRAWING CONTAINS INFORMATION THAT IS PROPRIETARY TO MOLEX INCORPORATED AND SHOULD NOT BE USED WITHOUT WRITTEN PERMISSION