This document was generated on 06/08/2010

PLEASE CHECK WWW.MOLEX.COM FOR LATEST PART INFORMATION

Part Number: 0878312020
Status: Active
Overview: milligrid
Description: 2.00mm (.079") Pitch Milli-Grid™ Header, Vertical, Through Hole, Shrouded, Lead-free, 20 Circuits, 0.38µm (15µ") Gold (Au) Plating, Center Polarization Slot, with Locking Windows, without PCB Locator, Tube

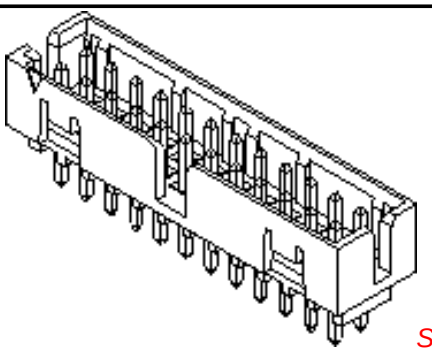

Series image - Reference only

Documents:

- 3D Model
- Drawing (PDF)
- Product Specification PS-87831-027 (PDF)
- RoHS Certificate of Compliance (PDF)

Agency Certification

CSA	LR19980
UL	E29179

General

Product Family	PCB Headers
Series	87831
Application	Wire-to-Board
Comments	Contact Molex for application in automotive industry
MolexKits	Yes
Overview	milligrid
Product Name	Milli-Grid™

Physical

Breakaway	No
Circuits (Loaded)	20
Circuits (maximum)	20
Color - Resin	Black
First Mate / Last Break	No
Flammability	94V-0
Glow-Wire Compliant	No
Guide to Mating Part	No
Keying to Mating Part	None
Lock to Mating Part	Yes
Material - Metal	Brass, Phosphor Bronze
Material - Plating Mating	Gold
Material - Plating Termination	Tin
Material - Resin	Nylon
Number of Rows	2
Orientation	Vertical
PC Tail Length (in)	0.098 In
PC Tail Length (mm)	2.50 mm
PCB Locator	No
PCB Retention	None
PCB Thickness Recommended (in)	0.062 In
PCB Thickness Recommended (mm)	1.60 mm
Packaging Type	Tube
Pitch - Mating Interface (in)	0.079 In
Pitch - Mating Interface (mm)	2.00 mm
Pitch - Term. Interface (in)	0.079 In
Pitch - Term. Interface (mm)	2.00 mm
Plating min: Mating (µin)	15
Plating min: Mating (µm)	0.38
Plating min: Termination (µin)	76
Plating min: Termination (µm)	1.88

EU RoHS
ELV and RoHS Compliant
REACH SVHC
Contains SVHC: No
Halogen-Free Status
Not Halogen-Free

China RoHS

Need more information on product environmental compliance?

Email productcompliance@molex.com
For a multiple part number RoHS Certificate of Compliance, click here

Please visit the Contact Us section for any non-product compliance questions.

Search Parts in this Series
87831Series

Mates With
50394 Wire-to-Board Terminals. 51110 Wire-to-Board Crimp Housing. 87568 Wire-to-Board IDT Housings. 79107 Board-to-Board Top Entry Through Hole Receptacle. 79108 Board-to-Board FFC/FPC Top Entry Through Hole Receptacle. L

Polarized to Mating Part	Side Slots (2)
Polarized to PCB	No
Shrouded	Fully
Stackable	No
Surface Mount Compatible (SMC)	Yes
Temperature Range - Operating	-55°C to +105°C
Termination Interface: Style	Through Hole

Electrical

Current - Maximum per Contact	2A
Voltage - Maximum	125V

Solder Process Data

Duration at Max. Process Temperature (seconds)	10
Lead-free Process Capability	Wave Capable (TH only)
Max. Cycles at Max. Process Temperature	1
Process Temperature max. C	260

Material Info

Reference - Drawing Numbers

Product Specification	PS-87831-027
Sales Drawing	SD-87831-011

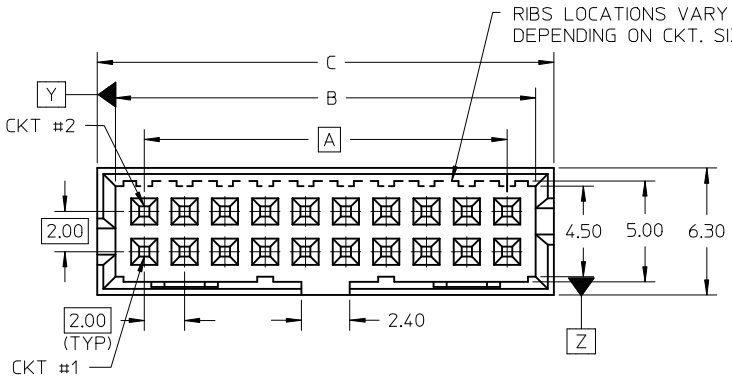

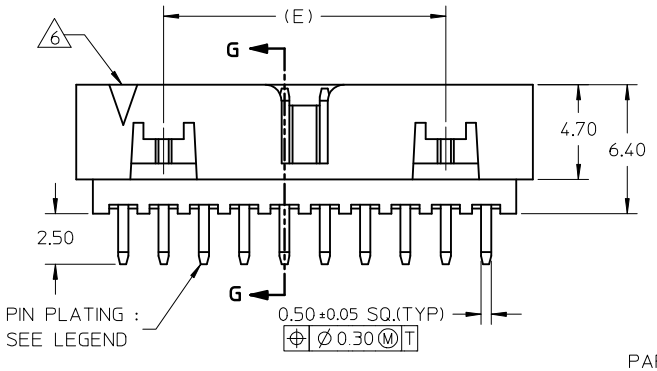

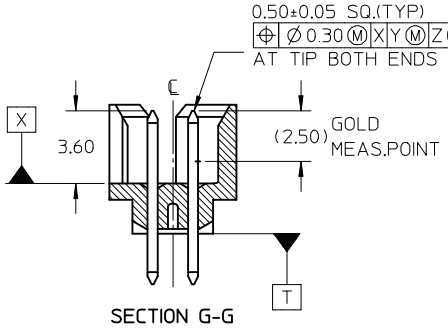

SECTION G-G

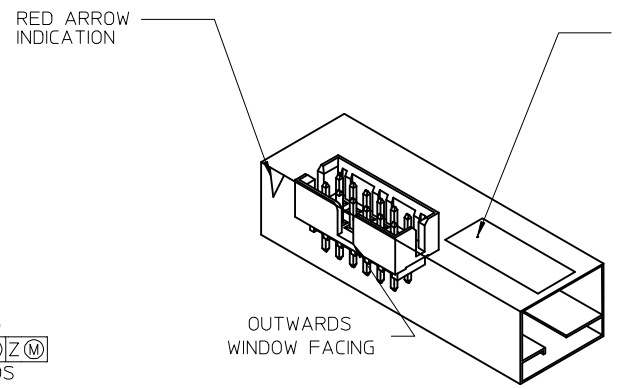

ORIENTATION OF PART IN TUBE
(FOR THE REFERENCE OF PART/TUBE ASSEMBLY)

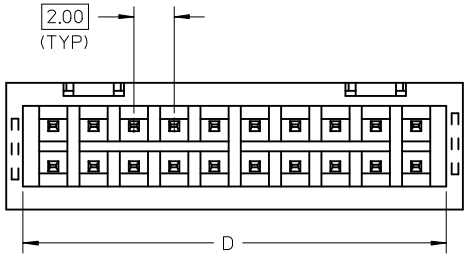

PART NUMBER LEGEND :

87831 - * * * *

PLATING OPTION

19 - 0.05-0.13um/2-5uin GOLD IN CONTACT AREA AND 1.88um/75uin MIN. TIN IN SOLDER TAIL AREA OVER 1.27um/50uin MIN. NICKEL OVERALL.

20 - 0.38um/15uin GOLD IN CONTACT AREA AND 1.88um/75uin MIN. TIN IN SOLDER TAIL AREA OVER 1.27um/50uin MIN. NICKEL OVERALL.

21 - 0.76um/30uin GOLD IN CONTACT AREA AND 1.88um/75uin MIN. TIN IN SOLDER TAIL AREA OVER 1.27um/50uin MIN. NICKEL OVERALL.

NOTES:

1. FOR ILLUSTRATION PURPOSES, 20 CIRCUIT SIZE WAFER IS SHOWN.
2. MATERIAL :
   HOUSING : 30% G.F., NYLON 46, UL94V-0, COLOR BLACK.
   PIN : 0.50MM SQ.PHOSPHOR BRONZE.
3. PRODUCT SPECIFICATION PS-87831-027 APPLIES.
4. NO CENTRE POLARIZATION SLOT FOR CKT SIZE 4 & 6 (EXCEPT FOR 87831-5119).
5. NO SIDE LOCKING SLOT FROM 4 TO 12 CKT SIZE.
6. CKT 4 AND 6 HAS NO IDENTIFICATION TAG.
7. REFER TO PART 87831-**4* FOR CENTRE LOCKING SLOT OPTION FOR 4 TO 12 CKT.
8. THIS HEADER MATES WITH MOLEX :
   a) CRIMP RECEPTACLE HOUSING, 51110 SERIES WITH CRIMP TERMINAL, 50394 SERIES.
   b) 2MM MILLIGRID DUAL ROW IDT, 87568 SERIES.
9. PARTS TO BE PACKED IN TUBE WITH MOISTURE BARRIER BAG.

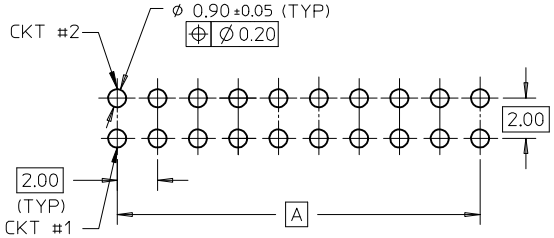

RECOMMENDED PCB PATTERN

REVISED
EC NO: S2009-0559 2009/02/23
DRWN:SKANG 2009/02/23
CH'KD:ATSEE 2009/02/23
APPR:MLONG
DESCRIPTION
A14
REV

QUALITY SYMBOLS
▼=0
Ⓒ▽=0

GENERAL TOLERANCES (UNLESS SPECIFIED)

	mm	INCH
4 PLACES	± ---	± ---
3 PLACES	± ---	± ---
2 PLACES	± 0.2	± ---
1 PLACE	± ---	± ---
ANGULAR ± 3 °		

DRAFT WHERE APPLICABLE MUST REMAIN WITHIN DIMENSIONS

DIMENSION STYLE: MM ONLY
SCALE: NTS
DESIGN UNITS: METRIC
THIRD ANGLE PROJECTION

DRAWN BY	ATSEE	DATE 2003/10/03
CHECKED BY	KCLING	DATE 2003/11/07
APPROVED BY	SKTOH	DATE 2003/11/07

TITLE: MGRID, SHROUDED HEADER VERTICAL W/SLOT & STANDOFF

MOLEX INCORPORATED

MATERIAL NO.: SEE TABLE
DOCUMENT NO.: SD-87831-011
SHEET NO.: 1 OF 2
SIZE: A3

THIS DRAWING CONTAINS INFORMATION THAT IS PROPRIETARY TO MOLEX INCORPORATED AND SHOULD NOT BE USED WITHOUT WRITTEN PERMISSION

P/N IN TUBE	CKT SIZE	VOID POSITION	DIMENSION				
			A	B	C	D	E
87831-04**	4	-----	2.00	4.85	6.65	5.00	-----
87831-06**	6	-----	4.00	6.85	8.65	7.00	-----
87831-08**	8	-----	6.00	8.85	10.65	9.00	-----
87831-10**	10	-----	8.00	10.85	12.65	11.00	-----
87831-12**	12	-----	10.00	12.85	14.65	13.00	-----
87831-14**	14	-----	12.00	14.85	16.65	15.00	8.00
87831-16**	16	-----	14.00	16.85	18.65	17.00	10.00
87831-18**	18	-----	16.00	18.85	20.65	19.00	12.00
87831-20**	20	-----	18.00	20.85	22.65	21.00	14.00
87831-22**	22	-----	20.00	22.85	24.65	23.00	16.00
87831-24**	24	-----	22.00	24.85	26.65	25.00	18.00
87831-26**	26	-----	24.00	26.85	28.65	27.00	20.00
87831-28**	28	-----	26.00	28.85	30.65	29.00	22.00
87831-30**	30	-----	28.00	30.85	32.65	31.00	24.00
87831-32**	32	-----	30.00	32.85	34.65	33.00	26.00
87831-34**	34	-----	32.00	34.85	36.65	35.00	28.00
87831-36**	36	-----	34.00	36.85	38.65	37.00	30.00
87831-38**	38	-----	36.00	38.85	40.65	39.00	32.00
87831-40**	40	-----	38.00	40.85	42.65	41.00	34.00
87831-42**	42	-----	40.00	42.85	44.65	43.00	36.00
87831-44**	44	-----	42.00	44.85	46.65	45.00	38.00
87831-46**	46	-----	44.00	46.85	48.65	47.00	40.00
87831-48**	48	-----	46.00	48.85	50.65	49.00	42.00
87831-50**	50	-----	48.00	50.85	52.65	51.00	44.00
87831-5120	12	1	10.00	12.85	14.65	13.00	-----
87831-5220	44	20	42.00	44.85	46.65	45.00	38.00
87831-5320	24	13	22.00	24.85	26.65	25.00	18.00
87831-5420	34	3	32.00	34.85	36.65	35.00	28.00
87831-5520	20	20	18.00	20.85	22.65	21.00	14.00
87831-5620	28	13	26.00	28.85	30.65	29.00	22.00
87831-5119	6	-----	4.00	6.85	8.65	7.00	-----
87831-5720	34	15	32.00	34.85	36.65	35.00	28.00
87831-5820	40	25	38.00	40.85	42.65	41.00	34.00
87831-5920	20	13	18.00	20.85	22.65	21.00	14.00
87831-6020	24	20	22.00	24.85	26.65	25.00	18.00

NO CENTRE POLARIZATION SLOT

REVISED
EC NO: S2009-0559 2009/02/23
DRWN:SKANG 2009/02/23
CH'KD:ATSEE 2009/02/23
APPR:MLONG 2009/02/23
DESCRIPTION
REV
A14

QUALITY SYMBOLS
▼=0
Ⓒ=0

GENERAL TOLERANCES (UNLESS SPECIFIED)

	mm	INCH
4 PLACES	± ---	± ---
3 PLACES	± ---	± ---
2 PLACES	± 0.2	± ---
1 PLACE	± ---	± ---
ANGULAR ± 3 °		

DRAFT WHERE APPLICABLE MUST REMAIN WITHIN DIMENSIONS

DIMENSION STYLE: MM ONLY
SCALE: NTS
DESIGN UNITS: METRIC
THIRD ANGLE PROJECTION

DRAWN BY: ATSEE DATE: 2003/10/03
CHECKED BY: KCLING DATE: 2003/11/07
APPROVED BY: SKTOH DATE: 2003/11/07
MATERIAL NO.: SEE TABLE

TITLE: MGRID, SHROUDED HEADER VERTICAL W/SLOT & STANDOFF
MOLEX INCORPORATED
DOCUMENT NO.: SD-87831-011
SHEET NO.: 2 OF 2
SIZE: A3

THIS DRAWING CONTAINS INFORMATION THAT IS PROPRIETARY TO MOLEX INCORPORATED AND SHOULD NOT BE USED WITHOUT WRITTEN PERMISSION