molex
one company > a world of innovation

This document was generated on 05/21/2010

PLEASE CHECK WWW.MOLEX.COM FOR LATEST PART INFORMATION

Part Number: 0876331002
Status: Active
Overview: extreme_powerplus_ssi
Description: 6.35mm (.250") Pitch, Power, 2.54mm (.100") Pitch, Signal, EXTreme PowerPlus™ P-S-P Receptacle, Press-fit, Vertical, 32 Circuits, Power Beta 4, Signal 24, Power Alpha 4, No Recessed Power Circuit, without Beveled Metal Pins, Leadfree

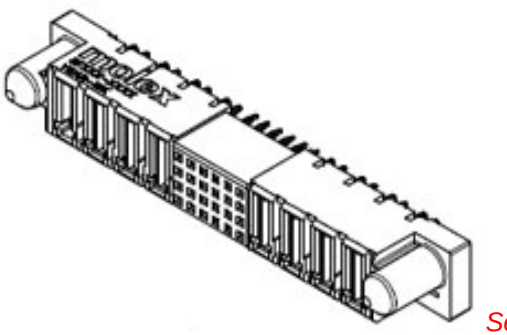

Series

image - Reference only

Documents:

3D Model
Drawing (PDF)
Product Specification PS-87633-006 (PDF)
RoHS Certificate of Compliance (PDF)

General

Product Family	PCB Receptacles
Series	87633
Application	Board-to-Board
Comments	<LI>No Recessed Power Circuits
Overview	extreme_powerplus_ssi
Product Literature Order No	987650-3002
Product Name	EXTreme PowerPlus™

Physical

Circuits (Loaded)	32
Circuits Detail	Power Beta 4, Signal 24, Power Alpha 4
Color - Resin	Black
Durability (mating cycles max)	100
Glow-Wire Compliant	No
Guide to Mating Part	Yes
Keying to Mating Part	Yes
Lock to Mating Part	No
Material - Metal	Copper Alloy
Material - Plating Mating	Gold
Material - Plating Termination	Tin
Material - Resin	High Temperature Thermoplastic
Number of Rows	4
Orientation	Vertical
PC Tail Length (in)	0.135 In
PC Tail Length (mm)	3.43 mm
PCB Locator	No
PCB Retention	None
PCB Thickness Recommended (in)	0.093 In
PCB Thickness Recommended (mm)	2.40 mm
Packaging Type	Tray
Pitch - Mating Interface (in)	0.100 In, 0.250 In
Pitch - Mating Interface (mm)	2.54 mm, 6.35 mm
Pitch - Term. Interface (in)	0.100 In, 0.250 In
Pitch - Term. Interface (mm)	2.54 mm, 6.35 mm
Plating min: Mating (µin)	30
Plating min: Mating (µm)	0.76
Plating min: Termination (µin)	100
Plating min: Termination (µm)	2.54
Polarized to Mating Part	Yes
Polarized to PCB	Yes
Temperature Range - Operating	-20°C to +105°C
Termination Interface: Style	Through Hole - Compliant Pin

Electrical

EU RoHS
ELV and RoHS Compliant
REACH SVHC
Not Reviewed
Halogen-Free Status
Halogen-Free

China RoHS

Need more information on product environmental compliance?

Email productcompliance@molex.com
For a multiple part number RoHS Certificate of Compliance, click here

Please visit the Contact Us section for any non-product compliance questions.

Search Parts in this Series
87633Series

Mates With
87631 EXTreme PowerPlus™ P-S-P Header

Current - Maximum per Contact	2.5A, 30A
Voltage - Maximum	50V DC

Material Info

Reference - Drawing Numbers

Application Specification	AS-87631-018, AS-87633-007
Product Specification	PS-87633-006
Sales Drawing	SD-87633-013

This document was generated on 05/21/2010

PLEASE CHECK WWW.MOLEX.COM FOR LATEST PART INFORMATION

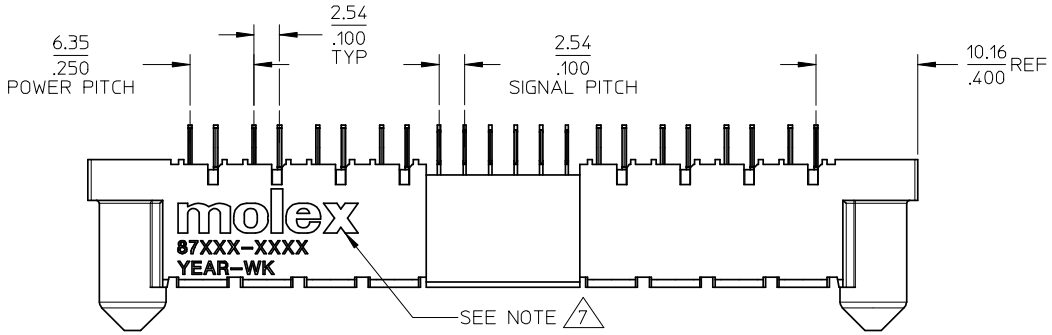

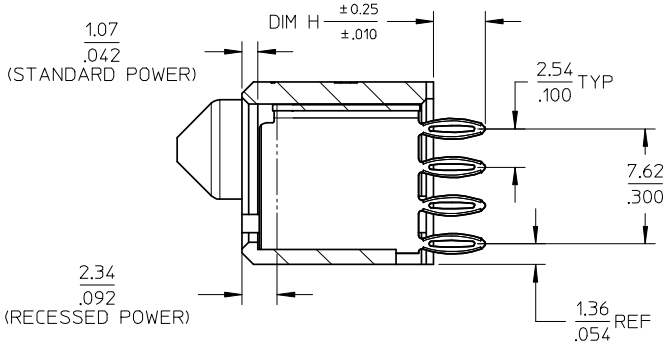

SECTION A-A

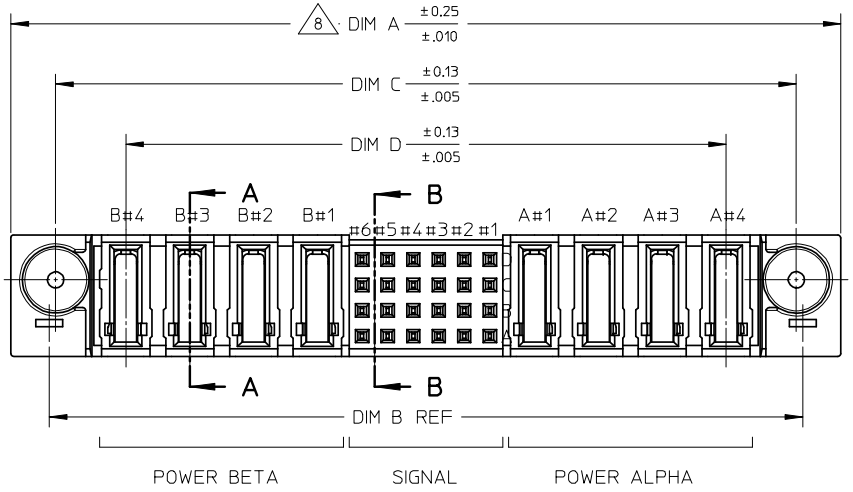

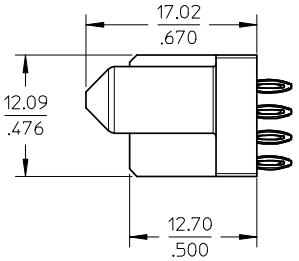

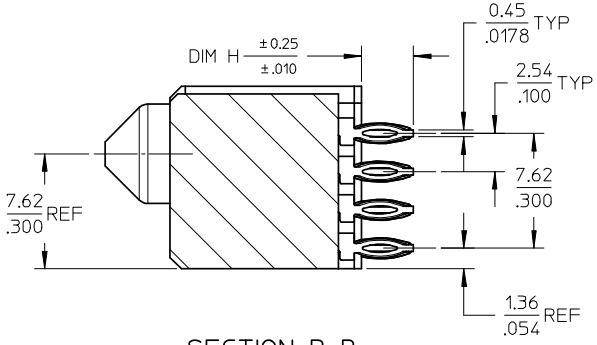

SECTION B-B

PDR#S00-1777-00-00		
EC NO: S2008-0921	2008/04/15	
DRWN:SKANG	2008/04/15	
CH'KD:ATSEE	2008/04/15	
APPR:MLONG		
DESCRIPTION		
C7	REV	

QUALITY SYMBOLS
▼=0
Ⓒ=0

GENERAL TOLERANCES (UNLESS SPECIFIED)

	mm	INCH
4 PLACES	± ---	± ---
3 PLACES	± ---	± .010
2 PLACES	± 0.25	± ---
1 PLACE	± ---	± ---
ANGULAR ± 3 °		

DRAFT WHERE APPLICABLE MUST REMAIN WITHIN DIMENSIONS

DIMENSION STYLE	MM/IN
SCALE	NTS
DESIGN UNITS	METRIC
	THIRD ANGLE PROJECTION
DRAWN BY	KMGOH
DATE	2002/11/19
CHECKED BY	PTLIM
DATE	2002/11/21
APPROVED BY	SKTOH
DATE	2002/11/21
MATERIAL NO.	SEE TABLE
TITLE	POWER CONN. RECEPTACLE P-S-P CONFIGURATION VERT. PRESS-FIT,W/G POST
	MOLEX INCORPORATED
DOCUMENT NO.	SD-87633-013
SHEET NO.	1 OF 4
SIZE	A3

THIS DRAWING CONTAINS INFORMATION THAT IS PROPRIETARY TO MOLEX INCORPORATED AND SHOULD NOT BE USED WITHOUT WRITTEN PERMISSION

NOTES

1 MATERIALS :-
HOUSING - LCP, GLASS FILLED, UL94V-0,
COLOR: BLACK.
SIGNAL TERMINAL - COPPER ALLOY
POWER TERMINAL - COPPER ALLOY

2 FINISH :-
SIGNAL & POWER CONTACTS
0.76 MICROMETER MINIMUM GOLD (Au) AT CONTACT AREA
AND 2.54 MICROMETER MINIMUM TIN/LEAD OR TIN AT SOLDERTAIL
AREA OVER 1.27um MINIMUM NICKEL (Ni) UNDERPLATE.

3 SPECIFICATIONS :-
PRODUCT SPECIFICATION : PS-87633-006
APPLICATION SPECIFICATION : AS-87633-007

4. COMPONENT STAY AWAY ZONE FROM CONNECTOR.

5 PCB NOTE FOR DIAMETER 1.02/.040 PLATED HOLE.
- DRILLED HOLE SIZE IS 1.151/.0453
- PLATED WITH 0.007/.0003 MINIMUM TIN/LEAD OR TIN OVER 0.03/.001 TO 0.08/.003 COPPER PLATING TO ACHIEVE 1.02±0.08/.040±.003 HOLE.

6 ALL TERMINAL TIPS ARE DESIGNED WITH EXPOSED BASE COPPER. THIS IS CREATED BY FINAL CUTTING PROCESS AFTER PLATING.

7 MANUFACTURER LOGO, PART NUMBER AND YEAR-WEEK CODE.

8 4Pa-24S-4Pb CONIFGURATION IS SHOWN FOR ILLUSTRATION ONLY. P-S-P CONFIGURATION IS AVAILABLE UP TO 203MM/8INCH. PLEASE CONTACT MOLEX SALES PERSONNEL FOR OTHER CONFIGURATION AND OPTION NEEDED.

9 IMAGINARY LINE AND DIMENSION TO POSITION AND PROVIDE CONNECTOR ORIENTATION WITH RESPECT TO PCB LAYOUT.

10. OPTIONAL BOARDLOCK FEATURE FOR SYMETRICAL POWER CONFIG FULL PROOFING UPON CUSTOMER REQUEST.

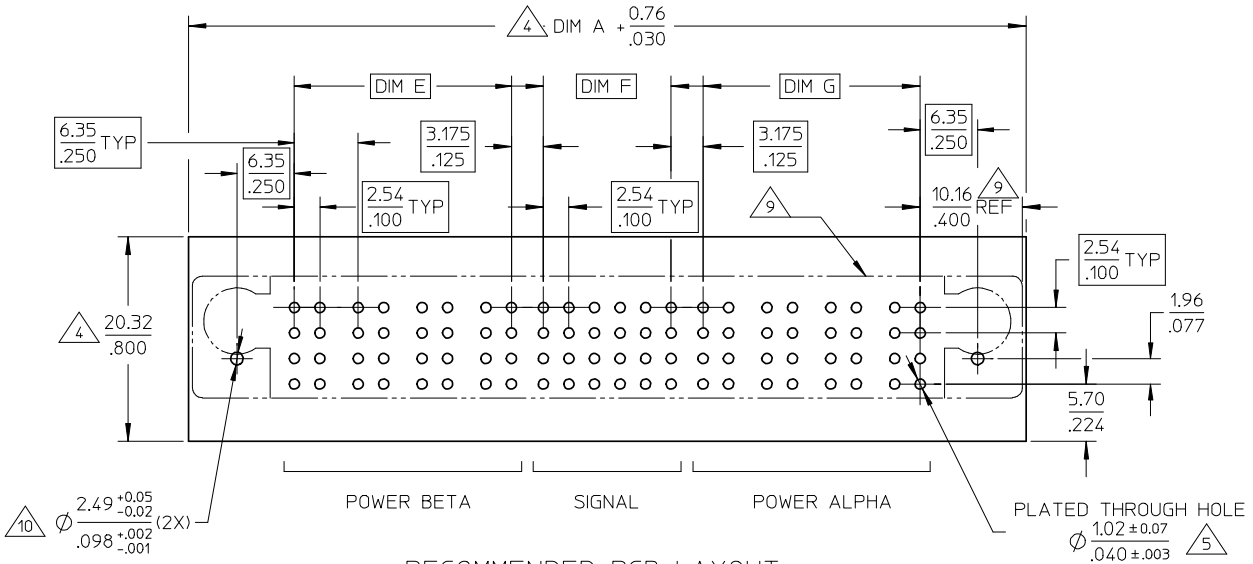

DRILLED HOLES UNPLATED

RECOMMENDED PCB LAYOUT
(COMPONENT SIDE)

PDR#S00-1777-00-00	QUALITY SYMBOLS	GENERAL TOLERANCES (UNLESS SPECIFIED)		DIMENSION STYLE	SCALE / DESIGN UNITS
EC NO: S2008-0921 2008/04/15	▼=0		mm / INCH	MM/IN	NTS / METRIC
DRWN:SKANG 2008/04/15	Ⓒ=0	4 PLACES	± --- / ± ---	DRAWN BY: KMGOH DATE: 2002/11/19	THIRD ANGLE PROJECTION
CH'KD:ATSEE 2008/04/15		3 PLACES	± --- / ±.010	CHECKED BY: PTLIM DATE: 2002/11/21	TITLE: POWER CONN. RECEPTACLE P-S-P CONFIGURATION VERT. PRESS-FIT,W/G POST
APPR:MLONG 2008/04/15		2 PLACES	± 0.25 / ± ---	APPROVED BY: SKTOH DATE: 2002/11/21	MOLEX INCORPORATED
DESCRIPTION		1 PLACE	± --- / ± ---	MATERIAL NO.: SEE TABLE	DOCUMENT NO.: SD-87633-013
REV: C7		ANGULAR ± 3 °			SHEET NO.: 2 OF 4
		DRAFT WHERE APPLICABLE MUST REMAIN WITHIN DIMENSIONS		SIZE: A3	

THIS DRAWING CONTAINS INFORMATION THAT IS PROPRIETARY TO MOLEX INCORPORATED AND SHOULD NOT BE USED WITHOUT WRITTEN PERMISSION

PART NUMBER	P-S-P CONFIGURATION			RECESSED POWER CIRCUIT#	DIMENSIONS								BOARDLOCK OPTION △10	PACKAGING	PLATING OPTION
	POWER BETA	SIGNAL	POWER ALPHA		A	B	C	D	E	F	G	H			
87633-8000	5	24	3	NIL	82.54 / 3.250	74.93 / 2.950	73.65 / 2.900	59.69 / 2.350	27.94 / 1.100	12.70 / .500	15.24 / .600	3.43 / .135	NIL	TRAY	TIN/LEAD
87633-8002	4	24	4	NIL	82.54 / 3.250	74.93 / 2.950	73.65 / 2.900	59.69 / 2.350	21.59 / .850	12.70 / .500	21.59 / .850	3.43 / .135			
87633-8003	3	24	3	NIL	69.84 / 2.750	62.23 / 2.450	60.95 / 2.400	46.99 / 1.850	15.24 / .600	12.70 / .500	15.24 / .600	3.43 / .135			
87633-8004	2	24	4	NIL	69.84 / 2.750	62.23 / 2.450	60.95 / 2.400	46.99 / 1.850	8.89 / .350	12.70 / .500	21.59 / .850	3.43 / .135			
87633-8005	2	48	2	A2, B2	72.38 / 2.850	64.77 / 2.550	63.49 / 2.500	49.53 / 1.950	8.89 / .350	27.94 / 1.100	8.89 / .350	3.43 / .135	YES		
87633-8011	7	32	6	NIL	119.38 / 4.700	111.76 / 4.400	110.48 / 4.350	96.52 / 3.800	40.64 / 1.600	17.78 / .700	34.29 / 1.350	3.43 / .135	NIL		
87633-8013	1	12	1	NIL	36.83 / 1.450	29.21 / 1.150	27.94 / 1.100	13.97 / .550	2.54 / .100	5.08 / .200	2.54 / .100	3.43 / .135			
87633-8021	6	32	7	A1,A2,A3,A4 B1,B2,B5,B6	119.38 / 4.700	111.76 / 4.400	110.48 / 4.350	96.52 / 3.800	34.29 / 1.350	17.78 / .700	40.64 / 1.600	3.43 / .135			
87633-8022	4	4	4	NIL	69.85 / 2.750	62.23 / 2.450	60.96 / 2.400	46.99 / 1.850	21.59 / .850	00.00 / 0.000	21.59 / .850	3.43 / .135	YES		
87633-8014	2	16	4	A3,A4,B2	64.77 / 2.550	57.15 / 2.250	55.88 / 2.200	41.91 / 1.650	8.89 / .350	7.62 / .300	21.59 / .850	3.43 / .135	NIL		

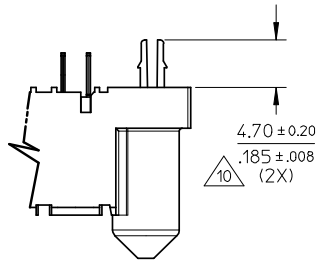

BOARDLOCK OPTION

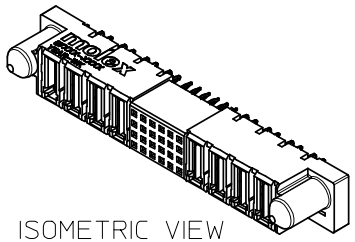

ISOMETRIC VIEW

PDR#S00-1777-00-00
EC NO: S2008-0921 2008/04/15
DRWN:SKANG 2008/04/15
CH'KD:ATSEE 2008/04/15
APPR:MLONG 2008/04/15
DESCRIPTION
C7
REV

QUALITY SYMBOLS
▼=0
Ⓒ=0

GENERAL TOLERANCES (UNLESS SPECIFIED)

	mm	INCH
4 PLACES	± ---	± ---
3 PLACES	± ---	± .010
2 PLACES	± 0.25	± ---
1 PLACE	± ---	± ---
ANGULAR ± 3 °		

DRAFT WHERE APPLICABLE MUST REMAIN WITHIN DIMENSIONS

DIMENSION STYLE: MM/IN
SCALE: NTS
DESIGN UNITS: METRIC
THIRD ANGLE PROJECTION

DRAWN BY: KMGOH DATE: 2002/11/19
CHECKED BY: PTLIM DATE: 2002/11/21
APPROVED BY: SKTOH DATE: 2002/11/21

TITLE: POWER CONN. RECEPTACLE P-S-P CONFIGURATION VERT. PRESS-FIT,W/G POST

molex MOLEX INCORPORATED

MATERIAL NO.: SEE TABLE
DOCUMENT NO.: SD-87633-013
SHEET NO.: 3 OF 4

SIZE A3

THIS DRAWING CONTAINS INFORMATION THAT IS PROPRIETARY TO MOLEX INCORPORATED AND SHOULD NOT BE USED WITHOUT WRITTEN PERMISSION

PART NUMBER	P-S-P CONFIGURATION			RECESSED	DIMENSIONS								BOARDLOCK OPTION △10	PACKAGING	PLATING OPTION
	POWER BETA	SIGNAL	POWER ALPHA	POWER CIRCUIT#	A	B	C	D	E	F	G	H			
87633-1000	5	24	3	NIL	82.54 / 3.250	74.93 / 2.950	73.65 / 2.900	59.69 / 2.350	27.94 / 1.100	12.70 / .500	15.24 / .600	3.43 / .135	NIL	TRAY	TIN
87633-1002	4	24	4	NIL	82.54 / 3.250	74.93 / 2.950	73.65 / 2.900	59.69 / 2.350	21.59 / .850	12.70 / .500	21.59 / .850	3.43 / .135			
87633-1003	3	24	3	NIL	69.84 / 2.750	62.23 / 2.450	60.95 / 2.400	46.99 / 1.850	15.24 / .600	12.70 / .500	15.24 / .600	3.43 / .135			
87633-1004	2	24	4	NIL	69.84 / 2.750	62.23 / 2.450	60.95 / 2.400	46.99 / 1.850	8.89 / .350	12.70 / .500	21.59 / .850	3.43 / .135			
87633-1005	2	48	2	A2, B2	72.38 / 2.850	64.77 / 2.550	63.49 / 2.500	49.53 / 1.950	8.89 / .350	27.94 / 1.100	8.89 / .350	3.43 / .135	YES		
87633-1011	7	32	6	NIL	119.38 / 4.700	111.76 / 4.400	110.48 / 4.350	96.52 / 3.800	40.64 / 1.600	17.78 / .700	34.29 / 1.350	3.43 / .135	NIL		
87633-1013	1	12	1	NIL	36.83 / 1.450	29.21 / 1.150	27.94 / 1.100	13.97 / .550	2.54 / .100	5.08 / .200	2.54 / .100	3.43 / .135			
87633-1021	6	32	7	A1,A2,A3,A4 B1,B2,B5,B6	119.38 / 4.700	111.76 / 4.400	110.48 / 4.350	96.52 / 3.800	34.29 / 1.350	17.78 / .700	40.64 / 1.600	3.43 / .135			
87633-1022	4	4	4	NIL	69.85 / 2.750	62.23 / 2.450	60.96 / 2.400	46.99 / 1.850	21.59 / .850	00.00 / 0.000	21.59 / .850	3.43 / .135	YES		
87633-1014	2	16	4	A3,A4,B2	64.77 / 2.550	57.15 / 2.250	55.88 / 2.200	41.91 / 1.650	8.89 / .350	7.62 / .300	21.59 / .850	3.43 / .135	NIL		
87633-1024	2	24	2	A2, B2	57.15 / 2.250	49.53 / 1.950	48.26 / 1.900	34.29 / 1.350	8.89 / .350	12.70 / .5000	8.89 / .350	3.43 / .135	YES		
87633-1028													NIL		
87633-1026	4	48	4	NIL	97.79 / 3.850	90.17 / 3.550	88.90 / 3.500	74.93 / 2.950	21.59 / 0.850	27.94 / 1.100	21.59 / 0.850	3.43 / .135	YES		
87633-1029	2	16	4	NIL	64.77 / 2.550	57.15 / 2.250	55.88 / 2.200	41.91 / 1.650	8.89 / .350	7.62 / .300	21.59 / .850	3.43 / .135	NIL		

PDR#S00-1777-00-00
EC NO: S2008-0921 2008/04/15
DRWN:SKANG 2008/04/15
CH'KD:ATSEE 2008/04/15
APPR:MLONG 2008/04/15
DESCRIPTION
REV
C7

QUALITY SYMBOLS
▼=0
Ⓒ▽=0

GENERAL TOLERANCES (UNLESS SPECIFIED)

	mm	INCH
4 PLACES	± ---	± ---
3 PLACES	± ---	± .010
2 PLACES	± 0.25	± ---
1 PLACE	± ---	± ---
ANGULAR ± 3 °		

DRAFT WHERE APPLICABLE MUST REMAIN WITHIN DIMENSIONS

DIMENSION STYLE: MM/IN
SCALE: NTS
DESIGN UNITS: METRIC
THIRD ANGLE PROJECTION

DRAWN BY: KMGOH DATE: 2002/11/19
CHECKED BY: PTLIM DATE: 2002/11/21
APPROVED BY: SKTOH DATE: 2002/11/21

TITLE: POWER CONN. RECEPTACLE P-S-P CONFIGURATION VERT. PRESS-FIT,W/G POST

MOLEX INCORPORATED

MATERIAL NO.: SEE TABLE
DOCUMENT NO.: SD-87633-013
SHEET NO.: 4 OF 4
SIZE: A3

THIS DRAWING CONTAINS INFORMATION THAT IS PROPRIETARY TO MOLEX INCORPORATED AND SHOULD NOT BE USED WITHOUT WRITTEN PERMISSION