A Dimensions: [mm]

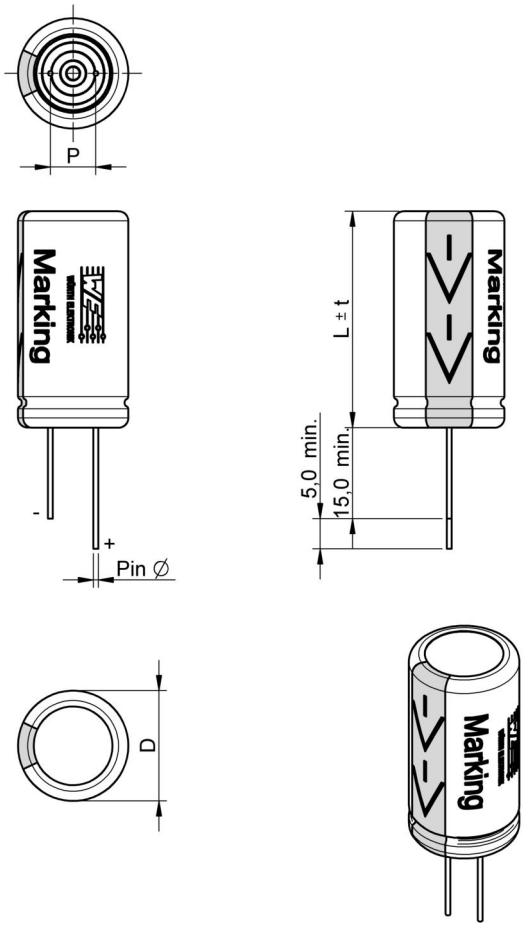

D ±0.5	10.0
P ±0.5	5.0
L ±t	12.5
t	1.5
Pin Ø ±0.02	0.6
a	5.0
b	0.9

B Recommended hole pattern: [mm]

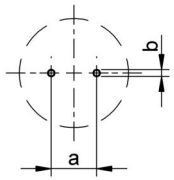

C Schematic:

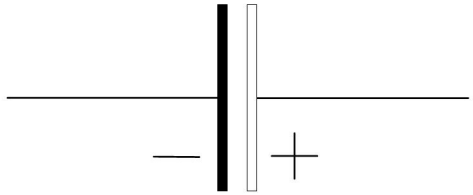

D1 Electrical Properties:

Properties	Test conditions		Value	Unit	Tol.
Capacitance	0.25V; 120Hz	C	47	µF	± 20%
Rated voltage		U_R	63	V (DC)	max.
Leakage current	after 2 min.	I_{Leak}	592.2	µA	max.
Dissipation factor	120 Hz	DF	12	%	typ.
ESR	100 kHz	R_{ESR}	50	mΩ	max.
Ripple current	100 kHz @105°C	I_{ripple}	1600	mA	max.

E General information:

Aluminium Polymer Capacitors	
Storage Conditions:	35°C, <45% RH
Operating Temperature:	-55 °C up to +105 °C
Load Life:	2000 h @ +105°C / 63 V (DC)
Test conditions of Electrical Properties:	20°C, 33% RH; if not specified differently
FIT according to	separate documentation

REV	DATE	BY	CHECKED
1.0	2014-11-11	SSt	PSL

Projection

Würth Elektronik eiSos GmbH & Co. KG
EMC & Inductive Solutions
Max-Eyth-Str. 1
74638 Waldenburg
Germany
Tel. +49 (0) 79 42 945 - 0
www.we-online.com
eiSos@we-online.com

DESCRIPTION

WCAP-PTHR Aluminum Polymer Capacitors

Order.- No.

870055875005

COMPLIANT RoHS&REACh WÜRTH ELEKTRONIK

SIZE

A4

Size: 10.0 x 12.5

This electronic component has been designed and developed for usage in general electronic equipment only. This product is not authorized for use in equipment where a higher safety standard and reliability standard is especially required or where a failure of the product is reasonably expected to cause severe personal injury or death, unless the parties have executed an agreement specifically governing such use. Moreover Würth Elektronik eiSos GmbH & Co KG products are neither designed nor intended for use in areas such as military, aerospace, aviation, nuclear control, submarine, transportation (automotive control, train control, ship control), transportation signal, disaster prevention, medical, public information network etc.. Würth Elektronik eiSos GmbH & Co KG must be informed about the intent of such usage before the design-in stage. In addition, sufficient reliability evaluation checks for safety must be performed on every electronic component which is used in electrical circuits that require high safety and reliability functions or performance.

Component Marking:

Print	Description
1st Line	Capacitance value: 63 µF & Rated voltage: 47 V (DC)
2nd Line	WCAP-PTHR & max. operating temperature +105°C
3rd Line	Datecode: YWW

D2 Multiplier for Ripple Current vs. Frequency:

Frequency	120 Hz ≤ freq. < 1 kHz	1 kHz ≤ freq. < 10 kHz	10 kHz ≤ freq. < 100 kHz	100 kHz ≤ freq. < 300 kHz
Multiplier	0.05	0.3	0.7	1.0

1.0	2014-11-11	SSt	PSL
REV	DATE	BY	CHECKED

Projection

Würth Elektronik eiSos GmbH & Co. KG
EMC & Inductive Solutions
Max-Eyth-Str. 1
74638 Waldenburg
Germany
Tel. +49 (0) 79 42 945 - 0
www.we-online.com
eiSos@we-online.com

DESCRIPTION

WCAP-PTHR Aluminum Polymer Capacitors

Order.- No.

870055875005

COMPLIANT RoHS&REACh WÜRTH ELEKTRONIK

SIZE

A4

Size: 10.0 x 12.5

This electronic component has been designed and developed for usage in general electronic equipment only. This product is not authorized for use in equipment where a higher safety standard and reliability standard is especially required or where a failure of the product is reasonably expected to cause severe personal injury or death, unless the parties have executed an agreement specifically governing such use. Moreover Würth Elektronik eiSos GmbH & Co KG products are neither designed nor intended for use in areas such as military, aerospace, aviation, nuclear control, submarine, transportation (automotive control, train control, ship control), transportation signal, disaster prevention, medical, public information network etc.. Würth Elektronik eiSos GmbH & Co KG must be informed about the intent of such usage before the design-in stage. In addition, sufficient reliability evaluation checks for safety must be performed on every electronic component which is used in electrical circuits that require high safety and reliability functions or performance.

H Soldering Specifications:

H4: Classification Wave Soldering Profile:

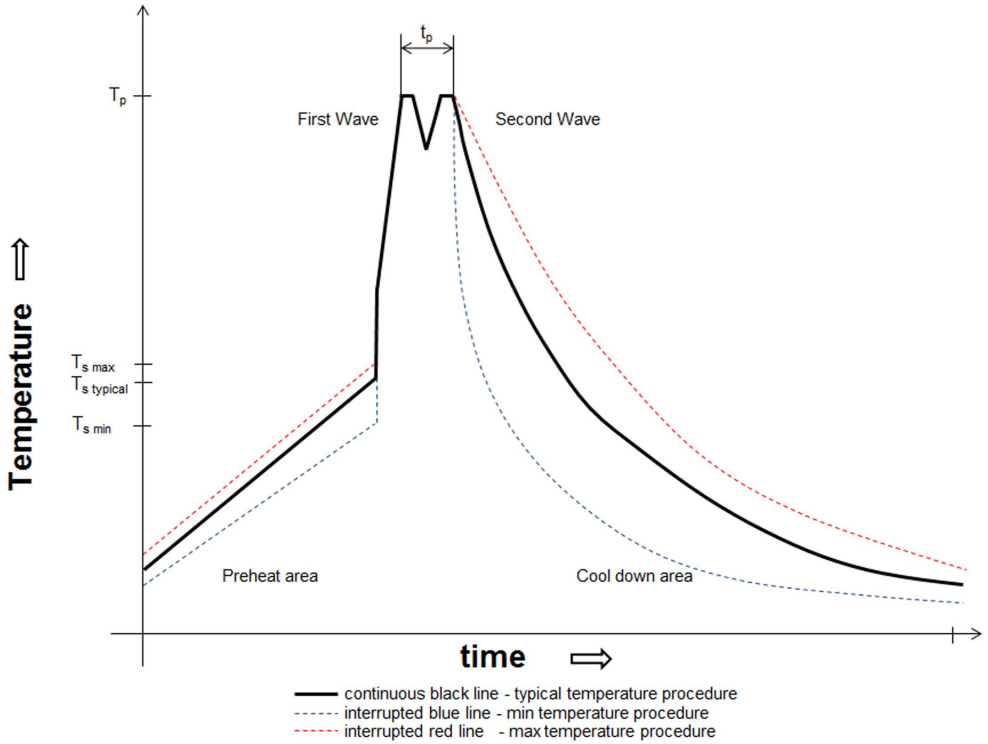

H5: Classification Wave Profile

Profile Feature	Pb-Free Assembly	Sn-Pb Assembly
Preheat - Temperature Min (T_{smin}) - Temperature Typical ($T_{stypical}$) - Temperature Max (T_{smax}) - Time (t_s) from (T_{smin} to T_{smax})	 100°C 120°C 130°C 70 seconds	 100°C 120°C 130°C 70 seconds
Δ preheat to max Temperature	150°C max.	150°C max.
Peak temperature (T_p)	250°C - 260°C	235°C - 260°C
Time of actual peak temperature (t_p)	max. 10 seconds max. 5 second each wave	max. 10 seconds max. 5 second each wave
Ramp-down rate - Min - Typical - Max	 ~ 2 K/s ~ 3.5 K/s ~ 5 K/s	 ~ 2 K/s ~ 3.5 K/s ~ 5 K/s
Time 25°C to 25°C	4 minutes	4 minutes

refer to EN 61760-1:2006

1.0	2014-11-11	SSt	PSL
REV	DATE	BY	CHECKED

Projection

Würth Elektronik eiSos GmbH & Co. KG
EMC & Inductive Solutions
Max-Eyth-Str. 1
74638 Waldenburg
Germany
Tel. +49 (0) 79 42 945 - 0
www.we-online.com
eiSos@we-online.com

DESCRIPTION

WCAP-PTHR Aluminum Polymer Capacitors

Order.- No.

870055875005

COMPLIANT RoHS&REACh WÜRTH ELEKTRONIK

SIZE

A4

Size: 10.0 x 12.5

This electronic component has been designed and developed for usage in general electronic equipment only. This product is not authorized for use in equipment where a higher safety standard and reliability standard is especially required or where a failure of the product is reasonably expected to cause severe personal injury or death, unless the parties have executed an agreement specifically governing such use. Moreover Würth Elektronik eiSos GmbH & Co KG products are neither designed nor intended for use in areas such as military, aerospace, aviation, nuclear control, submarine, transportation (automotive control, train control, ship control), transportation signal, disaster prevention, medical, public information network etc.. Würth Elektronik eiSos GmbH & Co KG must be informed about the intent of such usage before the design-in stage. In addition, sufficient reliability evaluation checks for safety must be performed on every electronic component which is used in electrical circuits that require high safety and reliability functions or performance.

I Cautions and Warnings:

The following conditions apply to all goods within the product series of WCAP-PTHR of Würth Elektronik eiSos GmbH & Co. KG:

1.1 Polarity
An Aluminum Polymer Capacitor has a polarity. In operation this polarity needs to be considered and adhered.
Reverse voltage can damage or destroy an Aluminum Polymer Capacitor. This can finally lead to a malfunction.
If the polarity in a circuit will be switched or possibly can be reversed, the usage of a non-polar capacitor shall be applied.
The polarity of an Aluminum Polymer Capacitor is for THT radial types marked like following.
The terminal with shorter lead wire marks the negative terminal. On the sleeve the negative terminal is marked with a color band and thereon are minus signs given. For further details see technical drawing on A1 dimensions in this datasheet.

1.2 Overvoltage
Avoid any overvoltage and do not apply a continuous overvoltage. If an overvoltage is applied to the capacitor, the leakage current can increase drastically. The applied working voltage is not allowed to exceed the rated working voltage of the specific capacitor.

1.3 Operating Temperature
The capacitor shall not be operated above the operating temperature, which is stated within this datasheet of the specific capacitor. The achievable lifetime of the capacitor is correlating to the applied temperature. In order to achieve the maximum lifetime, the capacitor should be operated by the lowest possible temperature conditions within the application.

1.4 Ripple Current
The applied ripple current shall not exceed the specified maximum ripple current of the capacitor.
If a higher ripple current is applied as permitted, it can cause excessive heat generation and higher temperature inside the capacitor. This happens due to pole change effects, if ripple current is applied to the capacitor. This can result in damage or lifetime shortage of the capacitor and may cause deterioration.
Electrolytic capacitors are regularly not designed for usage in AC applications and ripple current is applied / based due to parasitic effects on DC signal.
Please see electrical specification within this datasheet for maximum allowed ripple current.

1.5 Charge and Discharge
Frequent and quick charge / discharge cycles may generate heat inside the capacitor. In worst case this can cause a decrease of capacitance, an increase of leakage current or breakdown.
Applications with rapid charge and discharge cycles should be avoided. For assistance with your application please consult our technical support.

1.6 Sleeve
The sleeve material consists of PVC (polyvinyl-chloride). If excessive heat is applied to the sleeve (e.g. soldering process, etc.) the sleeve may crack or deform.
If the capacitor will be exposed to xylene, toluene or likewise and will be afterwards heated, the sleeve may crack or deform.
The sleeve does not assure any electrical insulation. It is to avoid to use / place the product on a spot where electrical insulation is needed. To assure electrical insulation, especially to the case of capacitor, further actions need to be taken.

1.7 Storage Conditions
The storage conditions for a capacitor are recommended to be 5 °C up to 35 °C and less than 75 % rel. humidity.
Do not expose the capacitor to environments with hazardous gas, ozone, ultraviolet rays or any kind of radiation. Avoid any contact of the capacitor with direct sunshine, saltwater, spray of water or types of oil during storage..
If a capacitor is stored for a long time without applying voltage or storage conditions of 35 °C or above and more than 75 % relative humidity, the leakage current may increase.
The leakage current will return to normal level when applying the rated voltage to the capacitor before use. If the capacitor was stored for more than 6 months, it is recommended to apply DC working voltage to the capacitor for 30 minutes through a 1 kΩ protective series resistor.
All products shall be used before the end of the period of 12 months based on the product date code, if not a 100 % solderability cannot be guaranteed. The capacitance tolerance as specified within the datasheet is only valid on the date of delivery.

1.8 Wave Soldering
The detailed soldering instruction is given within Soldering Specification in this datasheet.
During wave soldering only the pins / terminals should have contact with hot solder bath / wave. Assure that no direct contact of capacitor body with hot solder bath / wave or any other component will happen. Soldering must be done from the opposite PCB side where capacitor body is placed.

1.9 Hand Soldering
Take care that the tip of solder iron will only contact pins or leadframe of the capacitor to avoid any possible damage of the capacitor.

1.0	2014-11-11	SSt	PSL
REV	DATE	BY	CHECKED

Projection

Würth Elektronik eiSos GmbH & Co. KG
EMC & Inductive Solutions
Max-Eyth-Str. 1
74638 Waldenburg
Germany
Tel. +49 (0) 79 42 945 - 0
www.we-online.com
eiSos@we-online.com

DESCRIPTION

WCAP-PTHR Aluminum Polymer Capacitors

Order.- No.

870055875005

COMPLIANT RoHS&REACh WÜRTH ELEKTRONIK

SIZE

A4

Size: 10.0 x 12.5

This electronic component has been designed and developed for usage in general electronic equipment only. This product is not authorized for use in equipment where a higher safety standard and reliability standard is especially required or where a failure of the product is reasonably expected to cause severe personal injury or death, unless the parties have executed an agreement specifically governing such use. Moreover Würth Elektronik eiSos GmbH & Co KG products are neither designed nor intended for use in areas such as military, aerospace, aviation, nuclear control, submarine, transportation (automotive control, train control, ship control), transportation signal, disaster prevention, medical, public information network etc.. Würth Elektronik eiSos GmbH & Co KG must be informed about the intent of such usage before the design-in stage. In addition, sufficient reliability evaluation checks for safety must be performed on every electronic component which is used in electrical circuits that require high safety and reliability functions or performance.

I Cautions and Warnings (2):

The following conditions apply to all goods within the product series of WCAP-PTHR of Würth Elektronik eiSos GmbH & Co. KG:

1.10 Cleaning

Do not wash the assembled capacitors with the following cleaning agents:

- petroleum system solvents: may cause degeneration of the rubber seal material
- alkali system solvents: may cause corrosion and dissolve of the aluminum case
- halogenated solvents: may cause corrosion and failure of the capacitor
- acetone: component marking may be erased
- xylene: may cause deterioration of the rubber seal material

Verify the following points when washing is are applied to capacitors:

- Please monitor conductivity, ph-value, specific gravity and the water content of cleaning agents. Contamination adversely affects these characteristics.
- Be sure to not expose the capacitors under solvent rich conditions or keep capacitors inside a closed container. In addition, please dry the solvents on the PCB and the capacitor sufficiently with an air knife (temperature should be less than the maximum rated category temperature of the capacitor) for 10 minutes.
- Capacitors can be characteristically and catastrophically damaged by halogen ions, particularly by chlorine ions. The degree of the damage mainly depends upon the characteristics of the electrolyte and rubber seal material. When halogen ions come into contact with the inside of the capacitors, the foil may corrode, when a voltage is applied. This corrosion causes an extremely high leakage current, which results in venting and an open circuit defect.

All other cleaning processes and cleaning agents are not approved by Würth Elektronik eiSos. All cleaning methods need to be tested and validated by the customer.

1.11 Adhesives and Coating Materials

The usage of any adhesive or coating material, which is containing halogenated solvents, is not allowed.

Before applying adhesives or coating materials, make sure that the following points are fulfilled:

- Take care that the surface and capacitor is dry and clean before applying adhesive or coating, to avoid any contamination with flux residues or cleaning solvents.
- Assure that no flux residue or spot is left between the rubber seal material of the capacitor and the PCB.
- Do not fully cover the entire rubber seal surface with adhesive, coating or molding materials. Otherwise the covering of the full rubber seal surface may restrain the natural diffusion of hydrogen gas. Block maximum 80% of the sealed section of a capacitor.
- If the used adhesive, coating or molding material is containing halogen ions in a large amount, the halogen ions can diffuse and creep into the capacitor and can damage the capacitor. Both above explained circumstances can result in serious failures.
- Follow the specified heating and curing instructions given by supplier of the used adhesive or coating material. Avoid excessive pressure or heat on the capacitor by applying coating or adhesive.
- Take care that hardening of adhesive, coating material was correctly done, so that no solvents do remain.
- Be aware, that used solvents within adhesive and coating materials can damage the sleeve of the capacitor and can result in changes of the appearance of the sleeve (color, shine and marking).

1.12 Mechanical Stress on lead wire and terminal

Do not stress the capacitor with the following actions:

- Applying any excessive force to the lead wire or terminal.
- Move or turn the capacitor after soldering to the PCB.
- Bending pins after soldering.
- Carrying the PCB by picking / holding the board via a capacitor.

1.13 Operation and Usage of the Capacitor

In operation and usage take care about the following points.

Do not use the capacitor within the following environmental conditions:

- Environment with high mechanical stress / shocks or vibration (please see this specific datasheet for permitted limits).
- Environment with high amount of damp condensation, water or types of oil.
- Direct sunlight, ozone, any kind of radiation or ultraviolet rays.
- Toxic gases (e.g. ammonium, chlorine and compounds, bromine and compounds, hydrogen sulfide, sulfuric acid).

User should never touch the terminals of the capacitor directly.

Avoid short circuit between terminals with any kind of conductive material (e.g. metal, fluid, acid, alkaline solution).

1.14 Maintenance

For industrial applications it is recommended to perform periodic inspections. Power supplies shall be turned off before inspection to discharge the capacitor. Check the following points in case of an inspection:

- Visual inspection of the capacitor to see, if the vent operated for pressure relief and if any leakage of electrolyte has taken place.
- Measurement of electrical characteristics of the capacitor (according to datasheet, especially leakage current, capacitance and dissipation factor).

In case of deviation or failure according to the specified characteristics, take care to start appropriate actions (e.g. replacement of capacitor).

REV	DATE	BY	CHECKED
1.0	2014-11-11	SSt	PSL

Projection

Würth Elektronik eiSos GmbH & Co. KG
EMC & Inductive Solutions
Max-Eyth-Str. 1
74638 Waldenburg
Germany
Tel. +49 (0) 79 42 945 - 0
www.we-online.com
eiSos@we-online.com

DESCRIPTION

WCAP-PTHR Aluminum Polymer Capacitors

Order.- No.

870055875005

COMPLIANT RoHS&REACh WÜRTH ELEKTRONIK

SIZE

A4

Size: 10.0 x 12.5

This electronic component has been designed and developed for usage in general electronic equipment only. This product is not authorized for use in equipment where a higher safety standard and reliability standard is especially required or where a failure of the product is reasonably expected to cause severe personal injury or death, unless the parties have executed an agreement specifically governing such use. Moreover Würth Elektronik eiSos GmbH & Co KG products are neither designed nor intended for use in areas such as military, aerospace, aviation, nuclear control, submarine, transportation (automotive control, train control, ship control), transportation signal, disaster prevention, medical, public information network etc.. Würth Elektronik eiSos GmbH & Co KG must be informed about the intent of such usage before the design-in stage. In addition, sufficient reliability evaluation checks for safety must be performed on every electronic component which is used in electrical circuits that require high safety and reliability functions or performance.

I Cautions and Warnings (3):

The following conditions apply to all goods within the product series of WCAP-PTHR of Würth Elektronik eiSos GmbH & Co. KG:

1.15 Emergency Case

In case of excessive pressure within the capacitor the vent may operate and release this pressure. In case of vent operation gas becomes visible, when the component is in operation. If so, directly turn off the application and disconnect it from the power source. If the application will not be turned off, a possible short circuit of capacitor or a short circuit due to bridging of liquefied gas can possibly damage the circuit and in worst case the application may be dramatically damaged.
Do not stay or position body or face above or in direction of the vent, because in the event of any vent operation, the releasing gas temperature may have over 100 °C.
In case of contact with the electrolyte on skin, wash the skin immediately with soap and water. If the eyes will get in contact with the releasing gas, immediately wash the eyes with water. Whether the gas was inhaled, directly use gargle.

1.15.1 Additional Requirements for Aluminum Polymer Capacitors

Circuits and Designs where the usage of Aluminum Polymer Capacitors is prohibited are:
a) High-impedance circuits
b) Coupling Circuits
c) Time Constant Circuits
Due to thermal stress the leakage of Aluminum Polymer Capacitor can vary within the above stated applications.
If you want to use two or more Aluminum Polymer Capacitors in series connection for circuit designs, which are significantly affected by leakage current, please contact our technical staff before usage.

1.16 Disposal

Please contact your local responsible or organization for proper disposal of capacitor.
Also take care to be compliant in order to your local governmental law and restrictions. In case incineration, it should be done with more than 800 °C. Lower temperatures at incineration can result in toxic gases (e.g. chlorine). To avoid any explosion of capacitor, punch holes into the can or crush the capacitor before incineration.

1.0	2014-11-11	SSt	PSL
REV	DATE	BY	CHECKED

Projection

Würth Elektronik eiSos GmbH & Co. KG
EMC & Inductive Solutions
Max-Eyth-Str. 1
74638 Waldenburg
Germany
Tel. +49 (0) 79 42 945 - 0
www.we-online.com
eiSos@we-online.com

DESCRIPTION

WCAP-PTHR Aluminum Polymer Capacitors

Order.- No.

870055875005

COMPLIANT RoHS&REACh WÜRTH ELEKTRONIK

SIZE

A4

Size: 10.0 x 12.5

This electronic component has been designed and developed for usage in general electronic equipment only. This product is not authorized for use in equipment where a higher safety standard and reliability standard is especially required or where a failure of the product is reasonably expected to cause severe personal injury or death, unless the parties have executed an agreement specifically governing such use. Moreover Würth Elektronik eiSos GmbH & Co KG products are neither designed nor intended for use in areas such as military, aerospace, aviation, nuclear control, submarine, transportation (automotive control, train control, ship control), transportation signal, disaster prevention, medical, public information network etc.. Würth Elektronik eiSos GmbH & Co KG must be informed about the intent of such usage before the design-in stage. In addition, sufficient reliability evaluation checks for safety must be performed on every electronic component which is used in electrical circuits that require high safety and reliability functions or performance.

J Important Notes:

The following conditions apply to all goods within the product range of Würth Elektronik eiSos GmbH & Co. KG:

1. General Customer Responsibility
Some goods within the product range of Würth Elektronik eiSos GmbH & Co. KG contain statements regarding general suitability for certain application areas. These statements about suitability are based on our knowledge and experience of typical requirements concerning the areas, serve as general guidance and cannot be estimated as binding statements about the suitability for a customer application. The responsibility for the applicability and use in a particular customer design is always solely within the authority of the customer. Due to this fact it is up to the customer to evaluate, where appropriate to investigate and decide whether the device with the specific product characteristics described in the product specification is valid and suitable for the respective customer application or not.

2. Customer Responsibility related to Specific, in particular Safety-Relevant Applications
It has to be clearly pointed out that the possibility of a malfunction of electronic components or failure before the end of the usual lifetime cannot be completely eliminated in the current state of the art, even if the products are operated within the range of the specifications.

In certain customer applications requiring a very high level of safety and especially in customer applications in which the malfunction or failure of an electronic component could endanger human life or health it must be ensured by most advanced technological aid of suitable design of the customer application that no injury or damage is caused to third parties in the event of malfunction or failure of an electronic component.

Therefore, customer is cautioned to verify that data sheets are current before placing orders. The current data sheets can be downloaded at www.we-online.com.

3. Best Care and Attention
Any product-specific notes, cautions and warnings must be strictly observed. Any disregard will result in the loss of warranty.

4. Customer Support for Product Specifications
Some products within the product range may contain substances which are subject to restrictions in certain jurisdictions in order to serve specific technical requirements. Necessary information is available on request. In this case the field sales engineer or the internal sales person in charge should be contacted who will be happy to support in this matter.

5. Product R&D
Due to constant product improvement product specifications may change from time to time. As a standard reporting procedure of the Product Change Notification (PCN) according to the JEDEC-Standard inform about minor and major changes. In case of further queries regarding the PCN, the field sales engineer or the internal sales person in charge should be contacted. The basic responsibility of the customer as per Section 1 and 2 remains unaffected.

6. Product Life Cycle
Due to technical progress and economical evaluation we also reserve the right to discontinue production and delivery of products. As a standard reporting procedure of the Product Termination Notification (PTN) according to the JEDEC-Standard we will inform at an early stage about inevitable product discontinuance. According to this we cannot guarantee that all products within our product range will always be available. Therefore it needs to be verified with the field sales engineer or the internal sales person in charge about the current product availability expectancy before or when the product for application design-in disposal is considered.
The approach named above does not apply in the case of individual agreements deviating from the foregoing for customer-specific products.

7. Property Rights
All the rights for contractual products produced by Würth Elektronik eiSos GmbH & Co. KG on the basis of ideas, development contracts as well as models or templates that are subject to copyright, patent or commercial protection supplied to the customer will remain with Würth Elektronik eiSos GmbH & Co. KG.

Würth Elektronik eiSos GmbH & Co. KG does not warrant or represent that any license, either expressed or implied, is granted under any patent right, copyright, mask work right, or other intellectual property right relating to any combination, application, or process in which Würth Elektronik eiSos GmbH & Co. KG components or services are used.

8. General Terms and Conditions
Unless otherwise agreed in individual contracts, all orders are subject to the current version of the “General Terms and Conditions of Würth Elektronik eiSos Group”, last version available at www.we-online.com.

				Projection	DESCRIPTION
					WCAP-PTHR Aluminum Polymer Capacitors
				Würth Elektronik eiSos GmbH & Co. KG EMC & Inductive Solutions Max-Eyth-Str. 1 74638 Waldenburg Germany Tel. +49 (0) 79 42 945 - 0 www.we-online.com eiSos@we-online.com	Order.- No. **870055875005** COMPLIANT RoHS&REACh WÜRTH ELEKTRONIK SIZE: A4 Size: 10.0 x 12.5
1.0	2014-11-11	SSt	PSL		
REV	DATE	BY	CHECKED		

This electronic component has been designed and developed for usage in general electronic equipment only. This product is not authorized for use in equipment where a higher safety standard and reliability standard is especially required or where a failure of the product is reasonably expected to cause severe personal injury or death, unless the parties have executed an agreement specifically governing such use. Moreover Würth Elektronik eiSos GmbH & Co KG products are neither designed nor intended for use in areas such as military, aerospace, aviation, nuclear control, submarine, transportation (automotive control, train control, ship control), transportation signal, disaster prevention, medical, public information network etc.. Würth Elektronik eiSos GmbH & Co KG must be informed about the intent of such usage before the design-in stage. In addition, sufficient reliability evaluation checks for safety must be performed on every electronic component which is used in electrical circuits that require high safety and reliability functions or performance.