AXL F RTD4 1H

Axioline temperature module, 4 inputs for connecting resistance temperature detectors



Data sheet
8623_en_01

© PHOENIX CONTACT 2013-06-12

1 Description

The module is designed for use within an Axioline F station.

It is used to acquire signals from resistive temperature sensors.

The module supports all standard platinum and nickel sensors according to DIN EN 60751 and SAMA. Cu10, Cu50, Cu53 sensors as well as various KTY8x sensor types are also supported.

Features

- 4 analog input channels for connecting resistance temperature detectors (RTDs)
- Linear inputs 500 Ω and 5 kΩ
- Connection of sensors in 2, 3, or 4-wire technology
- Integrated, digital sensor linearization
- Standardized measured value representation directly in °C, °F or Ω
- Measured value representation in 16-bit format or floating-point format
- Programmable filters
- Short-circuit protected inputs
- Device type label stored
- Temperature stability
- Very high immunity to interference
- Low emitted interference
- Diagnostic and status indicators
- Monitoring the installation with the "Channel Scout" function

This data sheet is only valid in association with the UM EN AXL SYS INST user manual.

Make sure you always use the latest documentation.
It can be downloaded from the product at phoenixcontact.net/products.

2 Table of contents

1 Description 1
2 Table of contents 2
3 Ordering data 3
4 Technical data 3
5 Additional technical data 6
6 Temperature and resistance measuring ranges 7
7 Tolerance data 8
8 Temperature and drift response 11
9 Internal circuit diagram 13
10 Terminal point assignment 13
11 Connection examples 14
12 Connection notes 14
13 Local status and diagnostic indicators 15
14 Diagnostic behavior in the event of an error 16
15 Process data 17
16 Significant values in various formats 18
17 Parameter, diagnostics and information (PDI) 19
18 Standard objects 20
19 Application objects 24
20 Parameterization example 28
21 Device descriptions 28
22 Measuring errors through connecting cables for sensors with 2-wire termination 29
23 Calculation examples 30

3 Ordering data

Description	Type	Order No.	Pcs. / Pkt.
Axioline F temperature module, 4 inputs for connecting resistance temperature detectors (including bus base module and connectors)	AXL F RTD4 1H	2688556	1

Accessories	Type	Order No.	Pcs. / Pkt.
Axioline F bus base module for housing type H (Replacement item)	AXL F BS H	2700992	5
Axioline shield connection set (contains 2 busbar holders and 2 SK 5 shield connection clamps)	AXL SHIELD SET	2700518	1
Zack marker strip for Axioline (device labeling), in 2 x 20.3 mm pitch, unprinted, 25-section, for individual labeling with B-STIFT 0.8, X-PEN, or CMS-P1-PLOTTER (Marking)	ZB 20,3 AXL UNPRINTED	0829579	25
Zack marker strip, flat, in 10 mm pitch, unprinted, 10-section, for individual labeling with M-PEN 0,8, X-PEN, or CMS-P1-PLOTTER (Marking)	ZBF 10/5,8 AXL UNPRINTED	0829580	50
Insert label, Roll, white, Unlabeled, Can be labeled with: THERMOMARK ROLL, THERMOMARK X, THERMOMARK S1.1, Mounting type: Snapped into marker carrier, Lettering field: 35 x 28 mm (Marking)	EMT (35X28)R	0801602	1

Documentation	Type	Order No.	Pcs. / Pkt.
User manual, English, Axioline: System and installation	UM EN AXL SYS INST	-	-

4 Technical data

Dimensions (nominal sizes in mm)

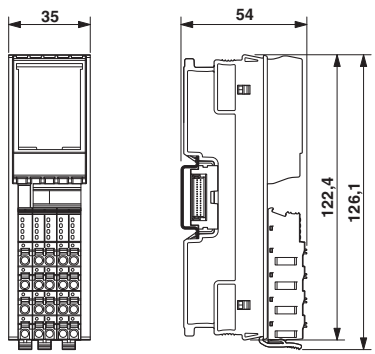

Width	35 mm
Height	126.1 mm
Depth	54 mm
Note on dimensions	The depth is valid when a TH 35-7.5 DIN rail is used (according to EN 60715).

General data

Color	gray
Weight	144 g (with plugs and bus base module)
Ambient temperature (operation)	-25 °C ... 60 °C
Ambient temperature (storage/transport)	-40 °C ... 85 °C
Permissible humidity (operation)	5 % ... 95 % (according to DIN EN 61131-2)
Permissible humidity (storage/transport)	5 % ... 95 % (according to DIN EN 61131-2)
Air pressure (operation)	70 kPa ... 106 kPa (up to 3000 m above sea level)

General data	
Air pressure (storage/transport)	70 kPa ... 106 kPa (up to 3000 m above sea level)
Degree of protection	IP20
Protection class	III, IEC 61140, EN 61140, VDE 0140-1

Connection data	
Name	Axioline plug
Connection method	Push-in technology
Conductor cross section solid / stranded	0.2 mm² ... 1.5 mm²
Conductor cross section [AWG]	24 ... 16

Interface Axioline F local bus	
Connection method	Bus base module
Transmission speed	100 MBit/s

Communications power	
Communications power U_{bus}	5 V DC (via bus base module)
Current consumption from U_{bus}	max. 140 mA
Power consumption at U_{BUS}	max. 700 mW

I/O supply	
Supply of analog modules U_A	24 V DC
Maximum permissible voltage range	19.2 V DC ... 30 V DC (including all tolerances, including ripple)
Current consumption from U_A	max. 17 mA
Power consumption at U_A	max. 400 mW
Surge protection	Electronic (35 V, 0.5 s)
Protection against polarity reversal	Polarity protection diode
Transient protection	Suppressor diode

Total power consumption of the module	
Power consumption	max. 1.1 W (at U_{BUS} and U_A)

Analog inputs	
Number of inputs	4 (for resistance temperature detectors)
Connection method	Spring-cage connection with direct plug-in method
Connection method	2, 3, 4-wire (shielded)
Sensor types (RTD) that can be used	Pt, Ni, KTY, Cu sensors
Linear resistance measuring range	0 Ω ... 500 Ω, 0 kΩ ... 5 kΩ
Resolution A/D	24 bit
Measured value representation	16 bits (15 bits + sign bit)
Data formats	IB IL, S7-compatible
Input filter time	40 ms, 60 ms, 100 ms, 120 ms (adjustable)
Relative accuracy	(See Tables under tolerance values)
Absolute accuracy	typ. ± 0.1 K (Pt100 with 3-wire termination)
Short-circuit protection, overload protection of the inputs	yes
Transient protection of inputs	yes
Transient protection of sensor supplies	yes

Analog inputs

Nominal value of the current sources	1 mA (Pt100, Ni100, R_{Lin} 500 Ω; pulse current, the specification is valid during the sampling phase) 210 µA (Pt1000, Ni1000, R_{Lin} 5000 Ω; pulse current, the specification is valid during the sampling phase)
Differential non-linearity	typ. 1 ppm / ±0.0001% (in all ranges)
Integral non-linearity	typ. 30 ppm / ±0.003% (Pt 100) typ. 20 ppm / ±0.002% (R_{Lin} 500 Ω) typ. 200 ppm / ±0.02% (R_{Lin} 5000 Ω)

PROFIBUS telegram data

Required parameter data	12 Byte
Need for configuration data	6 Byte

Electrical isolation/isolation of the voltage areas

5 V communications power (logic), 24 V supply (I/O)	500 V AC, 50 Hz, 1 min
5 V supply (logic)/functional earth ground	500 V AC, 50 Hz, 1 min
24 V supply (I/O) / functional earth ground	500 V AC, 50 Hz, 1 min

Mechanical tests

Vibration resistance in acc. with EN 60068-2-6/IEC 60068-2-6	5 g
Shock in acc. with EN 60068-2-27/IEC 60068-2-27	25 g, 11 ms period, half-sine shock pulse
Continuous shock according to EN 60068-2-27/IEC 60068-2-27	10 g

Conformance with EMC Directive 2004/108/EC

Noise immunity test in accordance with EN 61000-6-2	
Electrostatic discharge (ESD) EN 61000–4–2/IEC 61000–4–2	Criterion B; 6 kV contact discharge, 8 kV air discharge
Electromagnetic fields EN 61000–4–3/IEC 61000–4–3	Criterion A; Field intensity: 10 V/m
Fast transients (burst) EN 61000–4–4/IEC 61000–4–4	Criterion B, 2 kV
Transient surge voltage (surge) EN 61000–4–5/IEC 61000–4–5	Criterion B; supply lines DC: ±0.5 kV/±0.5 kV (symmetrical/asymmetrical); ±1 kV to shielded I/O cables
Conducted interference EN 61000–4–6/IEC 61000–4–6	Criterion A; Test voltage 10 V
Noise emission test according to EN 61000-6-3	
Radio interference properties EN 55022	Class B

Approvals

For the latest approvals, please visit phoenixcontact.net/products.

5 Additional technical data

Filter time	Typical scan repeat time for all four measuring channels	Typical scan time for each measuring channel
120 ms	1.64 s	410 ms
100 ms	1.5 s	375 ms
60 ms	1.16 s	290 ms
40 ms	1.0 s	250 ms

Common mode rejection with different filter times		
Filter time	**Optimization of common mode rejection for the interference frequency**	**Typical common mode rejection for measuring inputs of analog/digital converters (CMRR)**
120 ms	50 Hz	80 dB (at 50 Hz)
100 ms	60 Hz	90 dB (at 60 Hz)
60 ms	-	-
40 ms	-	-

Connecting cable and maximum cable length specifications		
Connection method	**Maximum permissible cable length**	**Sensor type**
4-wire	250 m	All
3-wire	100 m	All
2-wire	20 m	Pt 1000, Ni 1000, R_{Lin} 5000 Ω
2-wire	3 m	Pt 100, Ni 100, R_{Lin} 500 Ω

The maximum cable length specification is valid from the sensor to the connection terminal block and includes the maximum specified tolerances.

With 2-wire termination, longer cable lengths may increase the measuring tolerances.

The specifications are valid when using the reference cable type LiYCY (TP) 2*2*0.5 mm^2 and observing the Axioline F installation guidelines.

6 Temperature and resistance measuring ranges

Supported measuring ranges			
Sensor type	**Standard and manufacturer specification**	**Measuring range**	
		Lower limit	**Upper limit**
Pt sensors (e.g., Pt 100, Pt 500, Pt 1000)	DIN IEC 60751 or SAMA RC 21-4-1966	-200 °C	+850 °C
Ni sensors (e.g., Ni 100, Ni 1000)	DIN IEC 60751 or SAMA RC 21-4-1966	-60°C	+180°C
Ni 500 (Viessmann)	(Viessmann)	-60°C	+250°C
Ni 1000 (Landis & Gyr)	(Landis & Gyr)	-50°C	+160°C
KTY 81-110	(Philips)	-55°C	+150°C
KTY 81-210	(Philips)	-55°C	+150°C
KTY 84	(Philips)	-40°C	+300°C
Cu 10	SAMA RC 21-4-1966	-70°C	+500°C
Cu 50	SAMA RC 21-4-1966	-50°C	+200°C
Cu 53	SAMA RC 21-4-1966	-50°C	+180°C
Linear resistor R_{Lin} 500 Ω (linear range 1)		0 Ω	500 Ω
Linear resistor R_{Lin} 5000 Ω (linear range 2)		0 Ω	5000 Ω

The linear input ranges have an additional overflow range of 5% of the measuring range final value. For linear input ranges, the measuring range around the zero point may be limited by ±0.03%. If a short-circuit occurs or there is a resistance value of R = 0.0 Ω, the "Underrange" message (8080_{hex}/32896_{dec}) may appear in the process data.

7 Tolerance data

7.1 Tolerances with 3-wire technology at 25°C

Measuring conditions:

- Nominal operation U_A = 24 V
- Connection of sensors in 3-wire technology
- Filter of RTD inputs 120 ms
- All channels are connected
- Installation on horizontal DIN rail on the wall
- Reference cable type LiYCY (TP) 2*2*0.5 mm^2 with a connection length of < 1 m

No.	Sensor type	Measuring range		Absolute tolerance		Relative tolerance (with reference to MRFV)	
		Lower limit	Upper limit	Typical	Maximum	Typical	Maximum
1	Pt 100 DIN and SAMA	-200 °C	+200°C	±0.10 K	±0.38 K	±0.05%	±0.19%
2	Pt 100 DIN and SAMA	-200 °C	+850 °C	±0.13 K	±0.55 K	±0.02%	±0.06%
3	Pt 1000 DIN and SAMA	-200 °C	+850 °C	±0.15 K	±0.68 K	±0.02%	±0.08%
4	Ni 100	-60°C	+180°C	±0.05 K	±0.12 K	±0.03%	±0.07%
5	Ni 1000	-60°C	+180°C	±0.09 K	±0.46 K	±0.05%	±0.26%
6	Ni 1000 (Landis & Gyr)	-50°C	+160°C	±0.09 K	±0.49 K	±0.06%	±0.31%
7	KTY 81-110	-55°C	+150°C	±0.08 K	±0.41 K	±0.05%	±0.27%
8	KTY84 (KTY84 - 130, KTY84 - 150)	-55°C	+150°C	±1.20 K		±0.80%	
9	KTY 81-210	-55°C	+150°C	±0.05 K		±0.03%	
10	Cu 10	-70°C	+500°C				
11	Cu 50	-50°C	+200°C				
12	Cu 53	-50°C	+180°C				
13	Linear resistor R_{Lin} 500 Ω (linear range 1)	0 Ω	500 Ω	±0.12 Ω	±2.35 Ω	±0.02%	±0.47%
14	Linear resistor R_{Lin} 5000 Ω (linear range 2)	0.1 Ω	5000 Ω	±0.50 Ω	±6.5 Ω	±0.01%	±0.13%

MRFV= Measuring range final value

The data contains the offset error, gain error, and linearity error in its respective setting.

Please take the values for the temperature drift into consideration (see tables in Section "Temperature and drift response") when you determine the total tolerance.

Typical tolerance values are measured application values that are based on the maximum variance of all test objects.

The **maximum tolerance values** represent the worst case measurement inaccuracy. They contain the theoretically maximum possible tolerances in the corresponding measuring ranges. They also include the theoretically maximum tolerances of the test and calibration equipment. These tolerances are valid for at least 24 months.

7.2 Tolerances with 4-wire technology at 25°C

Measuring conditions:

- Nominal operation U_A = 24 V
- Connection of sensors in 4-wire technology
- Filter of RTD inputs 120 ms
- All channels are connected
- Installation on horizontal DIN rail on the wall
- Reference cable type LiYCY (TP) 2*2*0.5 mm^2 with a connection length of < 1 m

No.	Sensor type	Measuring range		Absolute tolerance		Relative tolerance (with reference to MRFV)	
		Lower limit	Upper limit	Typical	Maximum	Typical	Maximum
1	Pt 100 DIN and SAMA	-200 °C	+200°C	±0.05 K	±0.25 K	±0.03%	±0.13%
2	Pt 100 DIN and SAMA	-200 °C	+850 °C	±0.10 K	±0.42 K	±0.01%	±0.05%
3	Pt 1000 DIN and SAMA	-200 °C	+850 °C	±0.13 K	±0.60 K	±0.03%	±0.10%
4	Ni 100	-60°C	+180°C	±0.04 K	±0.12 K	±0.02%	±0.07%
5	Ni 1000	-60°C	+180°C	±0.09 K	±0.43 K	±0.05%	±0.24%
6	Ni 1000 (Landis & Gyr)	-50°C	+160°C	±0.09 K	±0.47 K	±0.06%	±0.29%
7	KTY 81-110	-55°C	+150°C	±0.08 K	±0.38 K	±0.03%	±0.10%
8	KTY84 (KTY84 - 130, KTY84 - 150)	-55°C	+150°C	±1.20 K		±0.80%	
9	KTY 81-210	-55°C	+150°C	±0.05 K		±0.03%	
10	Cu 10	-70°C	+500°C				
11	Cu 50	-50°C	+200°C				
12	Cu 53	-50°C	+180°C				
13	Linear resistor R_{Lin} 500 Ω (linear range 1)	0 Ω	500 Ω	±0.12 Ω	±2.35 Ω	±0.02%	±0.47%
14	Linear resistor R_{Lin} 5000 Ω (linear range 2)	0.1 Ω	5000 Ω	±0.50 Ω	±6.5 Ω	±0.03%	±0.13%

MRFV= Measuring range final value

The data contains the offset error, gain error, and linearity error in its respective setting.

Please take the values for the temperature drift into consideration (see tables in Section "Temperature and drift response") when you determine the total tolerance.

Typical tolerance values are measured application values that are based on the maximum variance of all test objects.

The **maximum tolerance values** represent the worst case measurement inaccuracy. They contain the theoretically maximum possible tolerances in the corresponding measuring ranges. They also include the theoretically maximum tolerances of the test and calibration equipment. These tolerances are valid for at least 24 months.

7.3 Tolerances influenced by electromagnetic interference

Type of electromagnetic interference	Standard	Level	Additional tolerances of measuring range final value	Criterion
Electromagnetic fields	EN 61000-4-3/IEC 61000-4-3	10 V/m	None	A
Fast transients (burst)	EN 61000-4-4/IEC 61000-4-4	1.1 kV	None	A
Conducted interference	EN 61000-4-6/IEC 61000-4-6	150 kHz ... 80 MHz, 10 V, 80% (1 kHz)	None	A

The data was determined under nominal conditions with the following parameterization: R_{Lin}: 500 Ω, resolution: 0.01 K, 4-wire termination, filter: 120 ms.

The set-up was implemented in accordance with the installation guidelines (with shielded I/O cables).



No additional tolerances occur due to the influence of high-frequency interference caused by wireless transmission systems in the near vicinity.

The specifications refer to nominal operation. The modules are directly exposed to interference without the use of additional shielding measures (e.g., steel cabinet).

8 Temperature and drift response

Please also observe the calculation examples at the end of the document.

8.1 Tolerance and temperature response (drift response) for 3-wire termination

Tolerance and temperature response at T_A = -25°C to +60°C				
Sensor type	**Measuring range**		**Drift**	
	Lower limit	**Upper limit**	**Typical**	**Maximum**
Pt 100 DIN and SAMA	-200 °C	+850 °C	±5 ppm/K	±18 ppm/K
Pt 1000 DIN and SAMA	-200 °C	+850 °C	±20 ppm/K	±65 ppm/K
Ni 100 DIN and SAMA	-60°C	+180°C	±4 ppm/K	±20 ppm/K
Ni 1000 DIN and SAMA	-60°C	+180°C	±23 ppm/K	±75 ppm/K
Linear resistor R_{Lin} 500 Ω (linear range 1)	0 Ω	500 Ω	±5 ppm/K	±20 ppm/K
Linear resistor R_{Lin} 5000 Ω (linear range 2)	0 Ω	5000 Ω	±34 ppm/K	±95 ppm/K

8.2 Tolerance and temperature response (drift response) for 4-wire termination

Tolerance and temperature response at T_A = -25°C to +60°C				
Sensor type	**Measuring range**		**Drift**	
	Lower limit	**Upper limit**	**Typical**	**Maximum**
Pt 100 DIN and SAMA	-200 °C	+850 °C	±3 ppm/K	±18 ppm/K
Pt 1000 DIN and SAMA	-200 °C	+850 °C	±18 ppm/K	±65 ppm/K
Ni 100 DIN and SAMA	-60°C	+180°C	±2 ppm/K	±20 ppm/K
Ni 1000 DIN and SAMA	-60°C	+180°C	±24 ppm/K	±75 ppm/K
Linear resistor R_{Lin} 500 Ω (linear range 1)	0 Ω	500 Ω	±4 ppm/K	±20 ppm/K
Linear resistor R_{Lin} 5000 Ω (linear range 2)	0 Ω	5000 Ω	±25 ppm/K	±80 ppm/K

Typical drift values have been determined under nominal conditions with a filter of 120 ms. All channels were connected and parameterized in the same way.

Typical tolerance values are measured application values that are based on the maximum variance of all test objects.

Hardly any typical drift influences can be determined in the temperature range from T_A = +25°C to +60°C. The documented typical drift values basically occur in the temperature range from T_A = -25°C to +25°C.

The **maximum values** represent the worst case measurement inaccuracy.

8.3 Absolute tolerances with a Pt100 sensor at T_A = -25°C ... +60°C

Measuring conditions:

- Nominal operation U_A = 24 V
- Filter of RTD inputs 120 ms
- Installation on horizontal DIN rail on the wall
- Reference cable type LiYCY (TP) 2*2*0.5 mm^2 with a connection length of < 100 m (with 3-wire technology)
- Reference cable type LiYCY (TP) 2*2*0.5 mm^2 with a connection length of < 250 m (with 4-wire technology)

Tolerances at T_A = -25°C ... +60°C					
Sensor type (4-wire termination)	**Measuring range (nominal range)**		**Connection method**	**Absolute tolerance**	
	Lower limit	**Upper limit**		**Typical**	**Maximum**
Pt 100 DIN and SAMA	-200 °C	+200°C	4-wire	±0.08 K	±0.43 K
Pt 100 DIN and SAMA	-200 °C	+200°C	3-wire	±0.15 K	±0.56 K

The data contains the offset error, gain error, and linearity error in its respective setting.

Typical tolerance values are measured application values that are based on the maximum variance of all test objects.

The **maximum tolerance values** represent the theoretical worst case measurement inaccuracy. Besides the maximum offset error and gain error, the maximum tolerance values also comprise the longtime drift as well as the maximum tolerances of the test and calibration equipment.

9 Internal circuit diagram

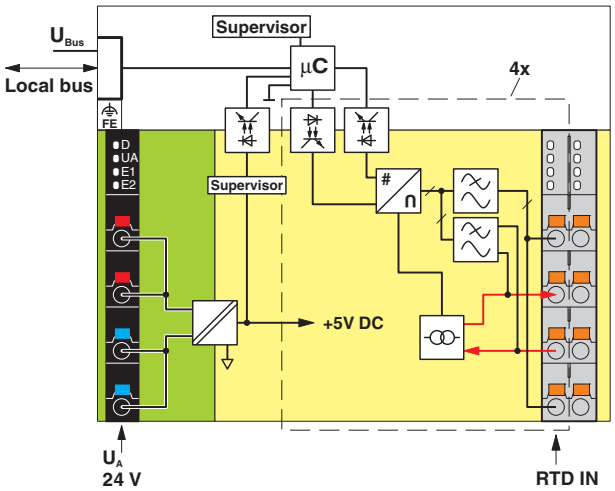

Figure 1 Internal wiring of the terminal points

Key:

Local bus	Axioline F local bus (hereinafter referred to as local bus)
µC	Microprocessor
	Optocoupler
	Power supply unit with electrical isolation
# n	Analog/digital converter
	Low pass filter
Supervisor	Hardware monitoring
	Constant current source
	Electrically isolated area

10 Terminal point assignment

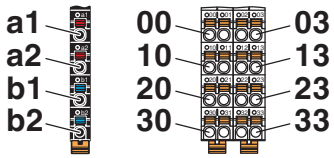

Figure 2 Terminal point assignment

Terminal point	Color	Assignment	
Supply voltage input			
a1, a2	Red	24 V DC (U_A)	Analog module supply (internally bridged)
b1, b2	Blue	GND	Reference potential of the supply voltage (internally bridged)
Analog inputs			
00 ... 03	Orange	U1+ ... U4+	RTD sensor + channel 1 ... 4
10 ... 13	Orange	I1+ ... I4+	Constant current supply + channel 1 ... 4
20 ... 23	Orange	I1- ... I4-	Constant current supply - channel 1 ... 4
30 ... 33	Orange	U1- ... U4-	RTD sensor - channel 1 ... 4

11 Connection examples

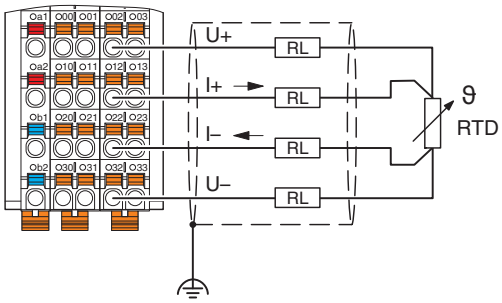

Figure 3 Connection example: 4-wire termination

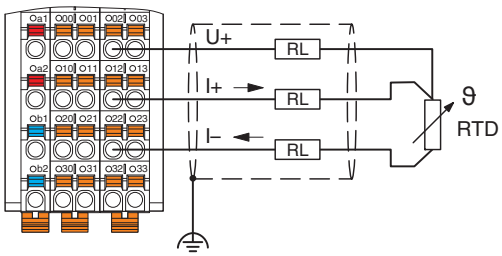

Figure 4 Connection example: 3-wire termination

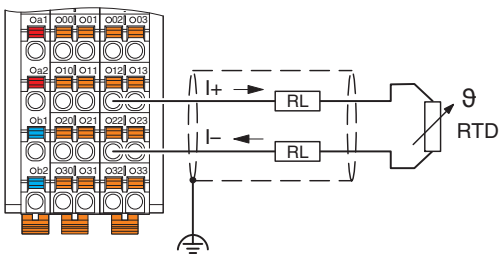

Figure 5 Connection example: 2-wire termination

In order to also measure 3-wire sensors with very long supply lines without additional tolerances, we also recommend 4-conductor connection technology here.

Parameterize the channel as 4-wire channel and jumper the Ix- and Ux- connections on the sensor side.

In this application you can connect sensors with a cable length up to 250 m.

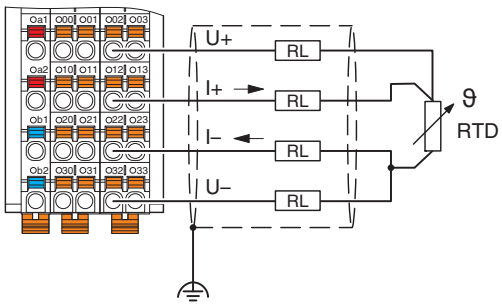

Figure 6 Connection example: 4-wire termination for 3-wire sensor with very long supply lines (> 100 m)

12 Connection notes

NOTE: Damage to the electronics/measuring errors

Always connect the analog sensors using shielded, twisted pair cables.

Unshielded cables may lead to values outside the specified tolerance limits in environments subject to heavy noise.

Shielded, twisted connecting cables (e.g., LiYCY (TP 2*2*0.5 mm^2) must be used in environments subject to heavy noise as well as for sensor cables longer than 1 m.

Connect the cable shield to functional earth immediately after the cables enter the control cabinet.

If there is no closed control cabinet, connect the shield to a shield bus.

Use the AXL SHIELD SET Axioline shield connection set for an optimized connection directly in front of the module.

For further information on shielding, please refer to the UM EN AXL SYS INST user manual.

13 Local status and diagnostic indicators

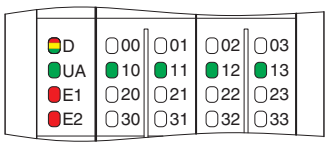

Figure 7 Local status and diagnostic indicators

Designation	Color	Meaning	State	Description
D	Red/yellow/green	Diagnostics of local bus communication		
		Power down	OFF	Device in (power) reset.
		Not connected	Red flashing	Device operating, but there is no connection to previous device.
		Reset	Red ON	Application reset Device operating, but there is still a connection to the previous device, the application is reset.
		Ready	Yellow ON	Device operating, there is still a connection to the previous device, but the device has not yet detected a valid cycle after power on.
		Connected	Yellow flashing	Valid data cycles have been detected, but the device is (not) yet part of the current configuration.
		Device application not active	Green/yellow alternating	Valid data cycles are being detected. The master application set the output data to valid, however, the slave application has not set the input data to valid as yet.
		Active	Green flashing	Device operating, communications within the station is OK. The master application does not read the input data. (The connection to the controller has not yet been established, for example.)
		Run	Green ON	Valid data cycles are being detected. All data is valid
UA	Green	U_{Analog}	ON	Supply of analog modules present
			OFF	Supply of analog modules not present
E1	Red	Supply voltage error	ON	Supply voltage is faulty.
			OFF	Supply voltage is present.
E2	Red	Error	ON	I/O or channel error has occurred.
			OFF	No error
10 ... 13	Red/Orange/Green	Channel Scout/error message		
		Channel Scout	Orange flashing	Channel searched for
		Error message	Red ON	Open circuit, overrange or underrange
		OK	Green ON	Normal operation

Channel errors are errors that can be associated with a channel.
Periphery errors are errors that affect the entire module.

For more information on the meaning of local diagnostic and status indicators, please refer to the UM EN AXL SYS INST user manual.

Error code and status of the E1 and E2 LEDs

Error	E1 LED	E2 LED
No error	OFF	OFF
Underrange	OFF	ON
Overrange	OFF	ON
Open circuit	OFF	ON
Faulty supply voltage	ON	ON
Parameter table invalid	OFF	ON
Device error	OFF	ON
Flash format error	OFF	ON

14 Diagnostic behavior in the event of an error

The module diagnoses and indicates the following error states. The states are indicates in the diagnostic object (PDI object 0018_{hex}), at the corresponding local diagnostic indicators, and in the IN process data when the IB IL format is set.

No.	Error	Indication in the process data	Messages via the "Diagnostics" object	Local diagnostic indicators
1	U_L missing	None (local bus without supply)	None	All LEDs are off. (Exception: UA LED)
2	Measured value is above the valid measuring range (e.g., 500 Ω at Pt100 input).	8001_{hex}: Measuring range exceeded (overrange)	Yes	LED of the affected channel (10 ... 13) lights up red E2 LED lights up red
3	Sensor connector is not plugged in, the sensor cable is completely interrupted	8002_{hex}: Open circuit	Yes	LED of the affected channel (10 ... 13) lights up red E2 LED lights up red
4	Measured value invalid (e.g., if channel is inactive)	8004_{hex}: Measured value invalid	Yes	None
5	U_A (24 V) is missing or failure of internal I/O voltages	8020_{hex}: Faulty supply voltage Peripheral fault message is triggered	Yes	E1 LED is red
6	Internal component faulty	8040_{hex}: Device faulty	Yes	E2 LED lights up red
7	Measured value is below the valid measuring range (e.g., 5 Ω at Pt100 input).	8080_{hex}: Below measuring range (underrange)	Yes	LED of the affected channel (10 ... 13) lights up red

15 Process data

The module uses four words of IN process data.

Each channel is mapped to a word.

Input words IN1 to IN4

The measured values are transmitted to the controller board or the computer using process data input words IN1 to IN4.

The I/O data is mapped as follows.

INx															
15	14	13	12	11	10	9	8	7	6	5	4	3	2	1	0
V	Analog value														

V Sign bit

In the IB IL format a diagnostic code is mapped to the input data in the event of an error.

Code (hex)	Cause
8001	Measuring range exceeded (overrange)
8002	Open circuit
8004	Measured value invalid/no valid measured value available
8010	Parameter table invalid
8020	Faulty supply voltage
8040	Device faulty
8080	Below measuring range (underrange)



As long as a used channel is not parameterized, the relevant status LED is OFF and the code 8004_{hex} is transmitted in the process data.

16 Significant values in various formats

16.1 Significant values in "IB IL" format

Input data		R 0 Ω ... 500 Ω		R 0 Ω ... 5 kΩ		Temperature sensors	
Resolution		0.1 Ω	0.01 Ω	1 Ω	0.1 Ω	0.1°C or 0.1°F	0.01°C or 0.01°F
hex	dec	Ω	Ω	Ω	Ω	°C or °F	°C or °F
8001	Overrange	> 525	> 325.12	> 5250	> 3251.2	> Limit value	> Limit value
03E8	1000	+100.0	+10.0	+1000.0	+100.0	+100.0	+10.0
0001	1	+0.1	+0.01	+1.0	+0.1	+0.1	+0.01
0000	0	≤ 0	≤ 0	≤ 0	≤ 0	0	0
FFFF	-1					-0.1	-0.01
FC18	-1000					-100.000	-10.0
8080	Underrange					< Limit value	< Limit value

16.2 Significant values in S7-compatible format

Input data		R 0 Ω ... 500 Ω		R 0 Ω ... 5 kΩ		Temperature sensors	
Resolution		0.1 Ω	0.01 Ω	1 Ω	0.1 Ω	0.1°C or 0.1°F	0.01°C or 0.01°F
hex	dec	Ω	Ω	Ω	Ω	°C or °F	°C or °F
7FFF	Overrange	> 525	> 325.12	> 5250	> 3251.2	> Limit value	> Limit value
03E8	1000	+100.0	+10.0	+1000.0	+100.0	+100.0	+10.0
0001	1	+0.1	+0.01	+1.0	+0.1	+0.1	+0.01
0000	0	≤ 0	≤ 0	≤ 0	≤ 0	0	0
FFFF	-1					-0.1	-0.01
FC18	-1000					-100.000	-10.0
8000	Underrange					< Limit value	< Limit value

17 Parameter, diagnostics and information (PDI)

Parameter and diagnostic data as well as other information is transmitted via the PDI channel of the Axioline F station.

For information on PDI, please refer to the UM EN AXL SYS INST user manual.

The standard and application objects stored in the module are described in the following section.

Please refer to the basic profile for comprehensive information.

The following applies to all tables below:

Please refer to the UM DE AXL SYS PRO or the basic profile for an explanation of the object codes and data types.

Abbreviation	Meaning
A	Number of elements
L	Length of the elements in bytes
R	Read
W	Write

Every visible string is terminated with a zero terminator (00_{hex}). The length of a visible string element is therefore one byte larger than the amount of user data.

18 Standard objects

18.1 Objects for identification (device rating plate)

Index (hex)	Object name	Object type	Data type	A	L	Rights	Meaning	Contents
Manufacturer								
0001	VendorName	Var	Visible String	1	16	R	Manufacturer name	Phoenix Contact
0002	VendorID	Var	Visible String	1	7	R	Manufacturer identification	00A045
0003	VendorText	Var	Visible String	1	49	R	Comment on the manufacturer	Components and systems for industrial automation
0012	VendorURL	Var	Visible String	1	30	R	URL of the manufacturer	http://www.phoenixcontact.com
Module - general								
0004	DeviceFamily	Var	Visible String	1	14	R	Device family	I/O analog IN
0006	ProductFamily	Var	Visible String	1	33	R	Product family	Axioline - High speed I/O system
000E	CommProfile	Var	Visible String	1	4	R	Communication profile	633
000F	DeviceProfile	Var	Visible String	1	5	R	Device profile	0010
0011	ProfileVersion	Record	Visible String	2	11; 22	R	Device profile version	2009-10-22; Basic - Profile V1.12
003A	VersionCount	Array	Unsigned 16	4	4 * 2	R	Version counter	e. g., 0005 0000 0000 0000
Module - special								
0005	Capabilities	Var	Visible String	1	8	R	Properties	Energ_0
0007	ProductName	Var	Visible String	1	17	R	Product designation	AXL F RTD4 1H ME
0008	SerialNo	Var	Visible String	1	11	R	Serial number	xxxxxxxxxx (e. g., 0123456789)
0009	ProductText	Var	Visible String	1	24	R	Product text	4 analog input channels
000A	OrderNumber	Var	Visible String	1	8	R	Order No.	2688569
000B	HardwareVersion	Record	Visible String	2	11; 3	R	Hardware version	e. g., 2010-06-21; 01
000C	FirmwareVersion	Record	Visible String	2	11; 6	R	Firmware version	e. g., 2010-06-21; V1.10
000D	PChVersion	Record	Visible String	2	11; 14	R	Parameter channel version	E.g., 0000-00-00; PDI-API V0.30
0037	DeviceType	Var	Octet string	1	8	R	Module identification	00 20 00 08 00 00 00 $A4_{hex}$
Use of the device								
0014	Location	Var	Visible String	1	59	R/W	Installation location	Can be filled out by the user.
0015	EquipmentIdent	Var	Visible String	1	59	R/W	Equipment identifier	Can be filled out by the user.
0016	ApplDeviceAddr	Var	Unsigned 16	1	2	R/W	User-defined device number	Can be filled out by the user.

18.2 Object for multilingual capacity

Index (hex)	Object name	Object type	Data type	A	L	Rights	Meaning	Contents
0017	Language	Record	Visible String	2	6; 8	R	Language	en-us; English

18.3 Object descriptions

Index (hex)	Object name	Object type	Data type	A	L	Rights	Meaning
0038	ObjDescrReq	Record		2	3	Read, write	Object whose description is requested
0039	ObjDescr	Record		16	See subindices	Read	Description of the object whose index was requested
003B	PDIN_Descr	Record		3	12	R	Description of the IN process data
003C	PDOUT_Descr	Record		3	12	R	Description of the output process data



These objects are only important for tools and are therefore not described in more detail here.

Please refer to the basic profile for comprehensive information.

18.4 Diagnostics objects

Index (hex)	Object name	Object type	Data type	A	L	Rights	Assignment/content
0018	DiagState	Record		6	2; 1; 1; 2; 1; 14	R	Diagnostics state; see below
0019	ResetDiag	Var	Unsigned 8	1	1	W	Reset diagnostics

Diagnostics state (0018_{hex}: DiagState)

This object is used for a structured message of an error.

0018_{hex}: DiagState (Read)					
Subindex	**Data type**	**Length in bytes**	**Meaning**	**Contents**	
0	Record	21	Diagnostic state	Complete diagnostics information	
1	Unsigned 16	2	Error number	0 ... 65535_{dec}	
2	Unsigned 8	1	Priority	00_{hex}	No error
				01_{hex}	Error
				02_{hex}	Warning
				81_{hex}	Error removed
				82_{hex}	Warning eliminated
3	Unsigned 8	1	Channel	00_{hex}	No error
				01_{hex}	Channel 1
				:	:
				04_{hex}	Channel 4
				FF_{hex}	Entire device
4	Unsigned 16	2	Error code	See table below	
5	Unsigned 8	1	More information follows	00_{hex} (not supported)	
6	Visible String	14	Text (14 characters)	See table below	

The message with the priority 81_{hex} or 82_{hex} is a one-time internal message to the bus coupler that is implemented onto the error mechanisms of the higher-level system by the bus coupler.

Error code and status of the local status and diagnostics indicators

Error	Error code	Text	Priority	Channel	D LED	LED UA	E1 LED	E2 LED
No error	0000_{hex}	Status OK	00_{hex}	00_{hex}	Green ON	ON	OFF	OFF
Faulty supply voltage	5160_{hex}	Supply fail	01_{hex}	FF_{hex}	Flashing green/yellow	OFF	ON	ON
Device error	6301_{hex}	CS FLASH	01_{hex}	FF_{hex}	Flashing green/yellow	ON	OFF	ON
Flash format error	6302_{hex}	FO FLASH	01_{hex}	FF_{hex}	Flashing green/yellow	ON	OFF	ON
Parameter table invalid	6320_{hex}	Invalid para	01_{hex}	FF_{hex}	Flashing green/yellow	ON	OFF	ON
Open circuit	7710_{hex}	Open circuit	01_{hex}	01_{hex} ... 04_{hex}	Green ON	ON	OFF	ON
Overrange	8910_{hex}	Overrange	02_{hex}	01_{hex} ... 04_{hex}	Green ON	ON	OFF	ON
Underrange	8920_{hex}	Underrange	02_{hex}	01_{hex} ... 04_{hex}	Green ON	ON	OFF	ON

Reset diagnostics (0019_{hex}: ResetDiag)

You can delete the diagnostics memory and acknowledge the diagnostic messages with this object.

0019_{hex}: ResetDiag (Write)					
Subindex	**Data type**	**Length in bytes**	**Meaning**	**Contents**	
0	Unsigned 8	1	Reset diagnostics	00_{hex}	All diagnostic messages approved
				02_{hex}	Deletes and acknowledges all pending diagnostic messages that have not been read out
				06_{hex}	Deletes and acknowledges all the diagnostic messages and allows no further diagnostic messages
				Other	Reserved

18.5 Objects for process data management

Index (hex)	Object name	Object type	Data type	A	L	Rights	Assignment
0025	PDIN	Var	Octet string	1	8	R	Input process data
0026	PDOUT	Var	Octet string	1	8	R	OUT process data; not applicable

IN process data (0025_{hex}: PDIN)

You can read the IN process data of the module with this object.

The structure corresponds to the representation in the "Process data" section.

0025_{hex}: PDIN (Read)			
Subindex	**Data type**	**Length in bytes**	**Meaning**
0	Octet string	8	Input process data

19 Application objects

Index (hex)	Object name	Object type	Data type	A	L	Rights	Assignment
0080	ParaTable	Array	Unsigned 16	6	6 * 2	R/W	Parameter table
0082	Measured Value Float	Array	Octet string	4	4 * 6	R	Measured values in the extended float format
0083	PD Min	Array	Integer 16	4	4 * 2	R	Minimum process data value
0084	PD Max	Array	Integer 16	4	4 * 2	R	Maximum process data value
0090	Channel Scout	Var	Unsigned 8	1	1	R/W	Channel scout

19.1 Parameter table (0080_{hex}: ParaTable)

Parameterize the module using this object.

In the case of valid parameters, the parameterization is stored in the module permanently.

After resetting, the module works with the last permanently stored data. Upon delivery, the module works with the default data (default settings).

0080_{hex}: ParaTable (read, write)				
Subindex	**Data type**	**Length in bytes**	**Meaning**	**Default value**
0	Array of Unsigned 16	6 * 2	Read/write all elements	See subindices
1	Unsigned 16	2	Parameterization of channel 1	$000F_{hex}$
:	Unsigned 16	2	:	$000F_{hex}$
4	Unsigned 16	2	Parameterization of channel 4	$000F_{hex}$
5	Unsigned 16	2	Data format	0000_{hex}
6	Unsigned 16	2	Reserved	0000_{hex}

Parameterization channel 1 ... channel 4

Parameterization word

15	14	13	12	11	10	9	8	7	6	5	4	3	2	1	0
Wire		Filter		R0				Res-olu-tion		0	0	Sensor type			

Connection method (wire):

Wire	Code (bin)	Code (hex)
3-wire (default)	**00**	**0**
2-wire	01	1
4-wire	10	2
Reserved	11	3

Filter:

Filter	Code (bin)	Code (hex)
120 ms (default)	**00**	**0**
100 ms	01	1
60 ms	10	2
40 ms	11	3

Resolution:

Resolution	Code (bin)	Code (hex)
0.1°C (default)	**00**	**0**
0.01°C	01	1
0.1°F	10	2
0.01°F	11	3

Resistance type (R0):

Parameterization of the resistance type is only useful for Pt and Ni sensors (DIN and SAMA). For other sensors the resistance type does not have to be parameterized.

R0 (Ω)	Code (bin)	Code (hex)
100 (default)	**0000**	**0**
10	0001	1
20	0010	2
30	0011	3
50	0100	4
120	0101	5
150	0110	6
200	0111	7
240	1000	8
300	1001	9
400	1010	A
500	1011	B
1000	1100	C
1500	1101	D
2000	1110	E
Reserved	1111	F

Sensor type:

Sensor type	Code (bin)	Code (hex)
Pt DIN	0000	0
Pt SAMA	0001	1
Ni DIN	0010	2
Ni SAMA	0011	3
Cu 10	0100	4
Cu 50	0101	5
Cu 53	0110	6
Ni 1000 (L&G)	0111	7
Ni 500 (Viessmann)	1000	8
KTY 81-110	1001	9
KTY84 (KTY84 - 130, KTY84 - 150)	1010	A
KTY 81-210	1011	B
Reserved	1100	C
Linear R 0 Ω ... 500 Ω	1101	D
Linear R 0 Ω ... 5 kΩ	1110	E
Channel inactive (default)	**1111**	**F**

For the sensor types 0_{hex} to 3_{hex} parameterize the resistance type as well.

Possible resolutions for the individual sensor types

Resolution for sensor type				
Temperature sensors	**Linear R 0 Ω ... 500 Ω**	**Linear R 0 Ω ... 5 kΩ**	**Code (bin)**	**Code (hex)**
0.1°C	0.1 Ω	1 Ω	00	0
0.01°C	0.01 Ω	0.1 Ω	01	1
0.1°F	0.1 Ω	1 Ω	10	2
0.01°F	0.01 Ω	0.1 Ω	11	3

Data format/system bits:

15	14	13	12	11	10	9	8	7	6	5	4	3	2	1	0
0	0	0	0	0	B	Data format		0	0	0	0	0	0	0	K

B: open circuit detection	Code (bin)	Code (hex)
Open circuit detection active (default)	**0**	**0**
Open circuit detection disabled	1	1

Open circuit detection is activated by default. In the event of extreme EMC requirements, i.e., interference significantly above the industry standard, this bit can be used to disable open circuit detection.

Data format	Code (bin)	Code (hex)
IB IL (default setting)	00	0
Reserved	01	1
S7-compatible	10	2
Reserved	11	3

K: Temperature drift compensation	Code (bin)	Code (hex)
Compensation active (default)	**0**	**0**
Compensation inactive	1	1

19.2 Measured value in extended float format (0082_{hex}: Measured Value Float)

You can read the IN process data in Inline or S7-compatible format with the 0025_{hex} object.

The 0082_{hex} object is also available.

This object provides the measured value in the highest internal accuracy of the terminal in the float format.

0082_{hex}: Measured Value Float (Read)			
Subindex	**Data type**	**Length in bytes**	**Meaning**
0	Array of Records	4 * 6	Read all elements
1	Record	6	Measured value for channel 1
:	:	:	:
4	Record	6	Measured value channel 4

Measured value channel 1 ... channel 4

Element	Data type	Length in bytes	Meaning
1	Float 32	4	Value in the float format acc. to IEEE 754
2	Unsigned 8	1	Status
3	Unsigned 8	1	Unit code

Structure of the float format according to IEEE 754 in the bit representation:

VEEE EEEE	EMMM MMMM	MMMM MMMM	MMMM MMMM

V	1 sign bit, 0: positive, 1: negative
E	8 bits exponent with offset $7F_{hex}$
M	23 bits mantissa

Some example values for conversion from floating point to hexadecimal representation:

Floating point	Hexadecimal representation
1.0	3F 80 00 00
10.0	41 20 00 00
1.03965528	3F 85 13 6D
- 1.0	BF 80 00 00

Extended Float Format

The Extended Float Format is a specially defined format. It consists of the measured value in the float format, a status and a unit code.

Status is necessary because the float format defines no patterns providing information on the status of the numerical value.

Status corresponds to the LSB of the Inline diagnostic codes (e.g. overrange: Status = 01, Inline diagnostic code = 8001_{hex}). If Status = 0, the measured value is valid.

Unit code	Code
°C	32 (20_{hex})
°F	33 (21_{hex})
Ohms (Ω)	37 (25_{hex})

Status	Code
Measured value is valid	00_{hex}
Measured value is invalid	Other

19.3 Minimum process data value (0083_{hex}: PD Min)

Object 0083_{hex} can be used to read the minimum process data values.

The values are initialized after each parameterization. The highest value is assigned for the minimum process data value.

PD Min = $7FFF\ 7FFF\ 7FFF\ 7FFF_{hex}$

On every analog conversion, the PD Min value is compared with the current measured values and overwritten if necessary.

0083_{hex}: PD Min (Read)			
Subindex	**Data type**	**Length in bytes**	**Meaning**
0	Array of Integer 16	4 * 2	Read all elements
1	Integer 16	2	Minimum process data value channel 1
:	:	:	:
4	Integer 16	2	Minimum process data value channel 4

19.4 Maximum process data value (0084_{hex}: PD Max)

Object 0084_{hex} can be used to read the maximum process data values.

The values are initialized after each parameterization. The lowest value is assigned for the maximum process data value.

PD Max = $8000\ 8000\ 8000\ 8000_{hex}$

On every analog conversion, the PD Max value is compared with the current measured values and overwritten if necessary.

0084_{hex}: PD Max (Read)			
Subindex	**Data type**	**Length in bytes**	**Meaning**
0	Array of Integer 16	4 * 2	Read all elements
1	Integer 16	2	Maximum process data value channel 1
:	:	:	:
4	Integer 16	2	Maximum process data value channel 4

19.5 Channel scout (0090_{hex})

This object is used to quickly find a channel.

0090_{hex}: channel scout (read, write)					
Subindex	**Data type**	**Length in bytes**	**Meaning**	**Contents**	
0	Var	1	Channel scout	0	Disable all channel scout processes
				1 ... 4	Green LED of the channel is flashing at 0.5 Hz (1 second ON, 1 second OFF)

The function is terminated automatically after five minutes if you do not deactivate the Channel Scout processes. The flashing overrides all diagnostic messages of the selected channel. When a channel is parameterized, the Channel Scout function is aborted.

0	Disable all channel scout processes
1 ... 4	Green LED of the channel is flashing at 0.5 Hz (1 second ON, 1 second OFF)

20 Parameterization example

A different parameterization is selected for every channel. The data format is the IB Inline format.

Channel	Connection method (wire)	Filter	R0	Resolution	Sensor type
1	3-wire	120 ms	100 Ω	0.1°C	Pt100 DIN
2	2-wire	40 ms	Not relevant	1 Ω	Linear R 0 Ω ... 5 kΩ
3	4-wire	120 ms	1000 Ω	0.1°C	Ni 1000 DIN
4	2-wire	120 ms	Not relevant	0.1°C	Cu 10

The individual parameterization words are combined in accordance with the modular principle.

Channel	Parameter word (hex)	Parameter word (bin)															
		15	14	13	12	11	10	9	8	7	6	5	4	3	2	1	0
		Wire		Filter		R0				Resolution				Sensor type			
1	0000	0	0	0	0	0	0	0	0	0	0	0	0	0	0	0	0
2	700E	0	1	1	1	0	0	0	0	0	0	0	0	1	1	1	0
3	8C02	1	0	0	0	1	1	0	0	0	0	0	0	0	0	1	0
4	4044	0	1	0	0	0	0	0	0	0	1	0	0	0	1	0	0

This results in the following parameter table:

Element	Meaning	Value (hex)
1	Parameterization of channel 1	0000
2	Parameterization of channel 2	700E
3	Parameterization of channel 3	8C02
4	Parameterization of channel 4	4044
5	Data format, system bits	0000
6	Reserved	0000

21 Device descriptions

The device is described in the device description files.
The device descriptions for controllers from Phoenix Contact are included in PC Worx and the corresponding service packs.
The device description files for other systems are available for download at phoenixcontact.net/download in the download area of the bus coupler used.

22 Measuring errors through connecting cables for sensors with 2-wire termination

Diagram 1

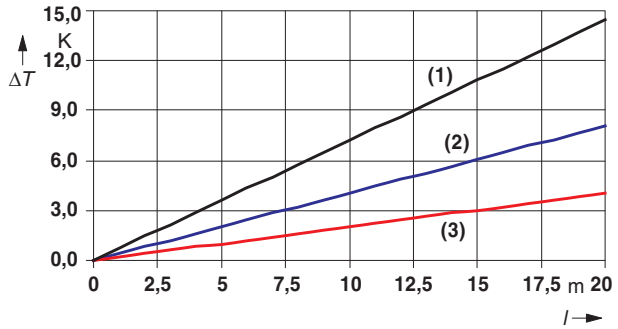

Figure 8 Systematic temperature measuring error ΔT depending on the cable length l

Curves depending on cable cross section A

1 Temperature measuring error for A = 0.14 mm²

2 Temperature measuring error for A = 0.25 mm²

3 Temperature measuring error for A = 0.50 mm²

(Measuring error valid for: copper cable χ = 57 m/Ωmm², T_A = 25°C and Pt100 sensor)

Diagram 2

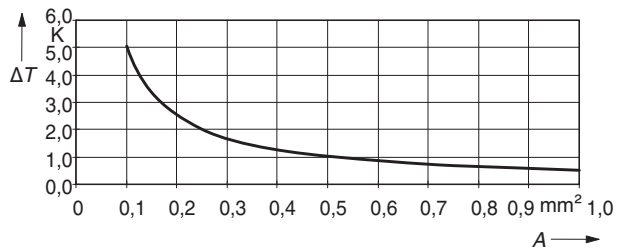

Figure 9 Systematic temperature measuring error ΔT depending on the cable cross section A

(Measuring error valid for: copper cable χ = 57 m/Ωmm², T_A = 25°C, l = 5 m, and Pt100 sensor)

Diagram 3

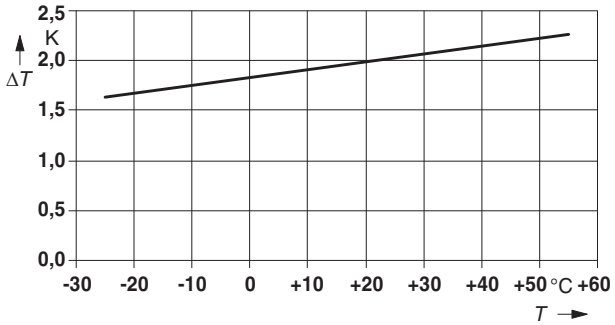

Figure 10 Systematic temperature measuring error ΔT depending on the cable temperature T

(Measuring error valid for: copper cable χ = 57 m/Ωmm², T_A = 25°C, l = 5 m, A = 0.25 mm², and Pt100 sensor)

Conclusion

All diagrams show that the increase in cable resistance causes the measuring error.

A considerable improvement is made when Pt1000 sensors are used. Due to the 10-fold higher temperature coefficient α (α = 0.385 Ω/K for Pt100 to α = 3.85 Ω/K for Pt1000) the effect of the cable resistance on the measurement is decreased by factor 10. All errors in the diagrams above would be reduced by factor 10.

Diagram 1 clearly shows the effect of the cable length on the cable resistance and therefore on the measuring error. The solution is to use the shortest possible sensor cables.

Diagram 2 shows the influence of the cable diameter on the cable resistance. It can be seen that cables with a diameter of less than 0.5 mm² cause the error to increase exponentially.

Diagram 3 shows the influence of the ambient temperature on the cable resistance. This parameter is of minor importance and can hardly be influenced. It is mentioned here only for the sake of completeness.

The formula for calculating the cable resistance is as follows:

$$R_L = R_{L20} \times \left(1 + 0{,}0039 \frac{1}{K} \times (T - 20°C) \right)$$

$$R_L = \frac{l}{\chi \times A} \times \left(1 + 0{,}0039 \frac{1}{K} \times (T - 20°C) \right)$$

Where:

R_L	Cable resistance in Ω
R_{L20}	Cable resistance at 20°C in Ω
l	Cable length in m
χ	Specific electrical resistance of copper in $m/\Omega mm^2$
A	Cable cross section in mm^2
0.0039 1/K	Temperature coefficient for copper (percentage purity of 99.9%)
T	Ambient temperature (cable temperature) in °C

Since there are two cable resistances in the measuring system (forward and return), the value must be doubled. The absolute measuring error in Kelvin [K] is provided for platinum detectors according to DIN using the average temperature coefficient χ (χ = 0.385 Ω/K for Pt100; χ = 3.85 Ω/K for Pt1000) .

23 Calculation examples

23.1 Typical temperature behavior

Task setting:

Temperatures of up to +45°C are achieved in the control cabinet.

1. What typical drift values of the measuring inputs are to be expected for temperature measurement with a Pt100 sensor using 4-wire technology at a measuring temperature of +180°C for this device?
2. What typical measuring tolerance is to be expected at +45°C?

Calculation:

The temperature difference is calculated using the formula (1):

$$\Delta T_A = T_S - 25°C \quad (1)$$

Where:

ΔT_A	Temperature difference (difference between current switch cabinet temperature and reference temperature of +25°C)
T_S	Current temperature in the switch cabinet

Value for this example:

T_S	= 45 °C

According to formula (1)

$$\Delta T_A = T_S - 25\ °C = 45\ °C - 25\ °C = 20\ K$$

The temperature drift of the Pt100 sensor is calculated according to formula (2):

$$T_{Drift} = \Delta T_A \times T_K \times T_M \quad (2)$$

Where:

T_{Drift}	Temperature drift of the Pt100 measuring input
ΔT_A	Temperature difference; from formula (1)
T_K	Temperature coefficient
T_M	Measuring temperature

Values for this example:

ΔT_A	= 20 K
T_K	= ±3 ppm/K (typical drift)
T_M	= 180°C

According to formula (2)

T_{Drift} $= \Delta T_A \times T_K \times T_M$
$= 20\ K \times \pm 3\ ppm/K \times 180°C$
$= 20 \times \pm 3 \times 10^{-6} \times 180°C$
T_{Drift} $= \pm 0.01\ K$

Solution:

Under these marginal conditions, a typical temperature drift of ±0.01 K is to be expected.

Calculation of the typical measuring tolerance:

The measuring tolerance is calculated using the formula (3):

$$\Delta T_{Tot} = \Delta T_{25} + T_{Drift} \quad (3)$$

Where:

ΔT_{Tot}	Total tolerance
ΔT_{25}	Typical tolerance at 25°C
T_{Drift}	Drift at 45°C; from formula (2)

Values for this example:

ΔT_{25}	$= \pm 0.05\ K$
T_{Drift}	$= \pm 0.01\ K$

According to formula (3)

ΔT_{Tot} $= \Delta T_{25} + T_{Drift}$
$= \pm 0.05\ K + \pm 0.01\ K$
ΔT_{Tot} $= \pm 0.06\ K$

23.2 Maximum temperature behavior (worst case)

Task setting:

Temperatures of up to +40°C are achieved in the control cabinet.

What typical drift values of the measuring inputs are to be expected for temperature measurement with a Pt100 sensor using 4-wire technology at a measuring temperature of +200°C for this device?

Calculation:

The measuring tolerance is calculated using the formula (3):

$$\Delta T_{Tot} = \Delta T_{25} + T_{Drift} \quad (3)$$

Values for this example:

ΔT_{25}	$= \pm 0.25\ K$
T_{Drift}	Must be calculated

To calculate the drift, proceed as described in the example for the typical temperature response.

The temperature difference is calculated using the formula (1):

$$\Delta T_A = T_S - 25°C \quad (1)$$

Value for this example:

T_S $= 40\ °C$

According to formula (1)

ΔT_A $= T_S - 25\ °C$
$= 40\ °C - 25\ °C$
$= 15\ K$

The maximum temperature drift of the Pt100 sensor is calculated according to formula (2):

$$T_{Drift} = \Delta T_A \times T_K \times T_M \quad (2)$$

Values for this example:

ΔT_A	$= 15\ K$
T_K	$= \pm 18$ ppm/K (maximum drift)
T_M	$= 200\ °C$

According to formula (2)

T_{Drift} $= \Delta T_A \times T_K \times T_M$
$= 15\ K \times \pm 18\ ppm/K \times 200°C$
$= 15 \times \pm 18 \times 10^{-6} \times 200°C$
T_{Drift} $= \pm 0.05\ K$

The measuring tolerance is calculated using the formula (3):

According to formula (3)

ΔT_{Tot} $= \Delta T_{25} + T_{Drift}$
$= \pm 0.25\ K + \pm 0.05\ K$
ΔT_{Tot} $= \pm 0.30\ K$

Solution:

With an ambient temperature of +40°C, a maximum worst case measuring tolerance of ±0,30 K is to be expected.