Picture differs from the item.

Similar to picture

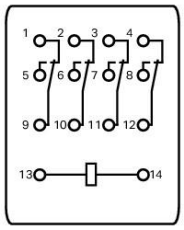

Subject to changes. Please also observe the further product documentation!

WAGO GmbH & Co. KG
Hansastr. 27
32423 Minden
Phone: +49571 887-0 | Fax: +49571 887-169
Email: info.de@wago.com | Web: www.wago.com

Do you have any questions about our products?
We are always happy to take your call at +49 (571) 887-44222.

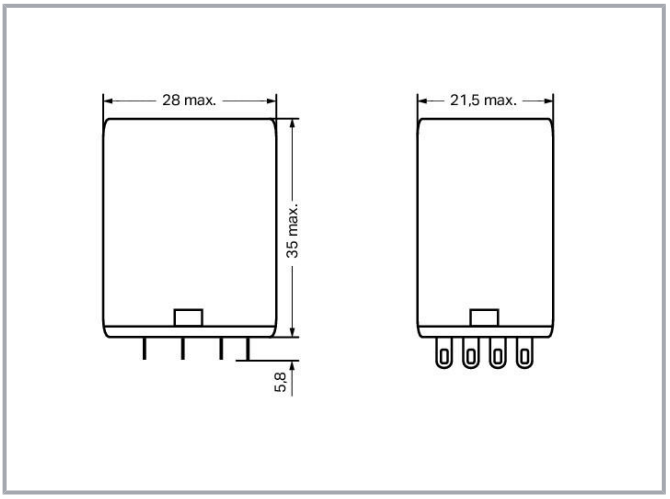

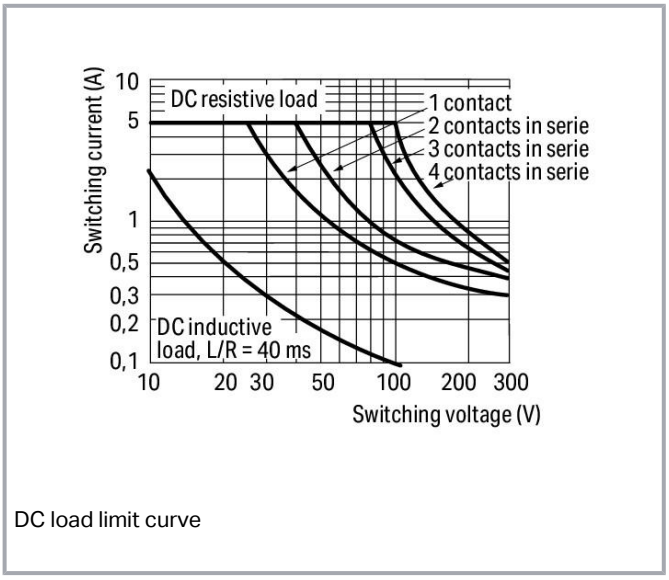

DC load limit curve

Data

Technical data

Control circuit

Nominal input voltage U_N	DC 12 V
Nominal input current at U_N	75 mA

Load circuit

Number of changeover/switchover contacts	4
Contact material (relay)	AgCe
Limiting continuous current	5 A
Inrush current (resistive) (max.)	(AC) 15 A / 4 s
Switching voltage (max.)	AC 250 V
Switching power (resistive) (max.)	AC 1250 VA; DC (see load limit curve)
Recommended minimum load	12 V / 100 mA
Pull-in time (typ.)	25 ms
Drop-out time (typ.)	25 ms
Bounce time (typ.)	4 ms
Electrical life (NO; resistive load; 23 °C)	100 x 10^3 switching operations
Mechanical life	20 x 10^6 switching operations

Subject to changes. Please also observe the further product documentation!

WAGO GmbH & Co. KG
Hansastr. 27
32423 Minden
Phone: +49571 887-0 | Fax: +49571 887-169
Email: info.de@wago.com | Web: www.wago.com

Do you have any questions about our products?
We are always happy to take your call at +49 (571) 887-44222.

Signaling

Status indicator	Red LED Mechanical

Safety and protection

Dielectric strength, control/load circuit (AC, 1 min)	1.5 kVrms
Dielectric strength, open contact (AC, 1 min)	1 kVrms
Dielectric strength, load/load circuit (AC, 1 min)	1.5 kVrms
Protection type	IP20

Physical data

Width	21.5 mm / 0.846 inch
Height from the surface	35 mm / 1.378 inch
Depth	28 mm / 1.102 inch

Mechanical data

Mounting type	Pluggable module

Material data

Weight	37 g

Environmental requirements

Surrounding air temperature (operation at U_N)	-25 … 70 °C
Surrounding air temperature (storage)	-40 … 80 °C

Standards and specifications

Standards/Specifications	EN 61810-1

Commercial data

PU (SPU)	3 Each
Packaging type	box
Country of origin	DE
GTIN	4055143531917
Customs tariff number	85364900990

Subject to changes. Please also observe the further product documentation!

WAGO GmbH & Co. KG
Hansastr. 27
32423 Minden
Phone: +49571 887-0 | Fax: +49571 887-169
Email: info.de@wago.com | Web: www.wago.com

Do you have any questions about our products?
We are always happy to take your call at +49 (571) 887-44222.

Optional accessories

Sockets

Socket without relay



Item no.: 858-100
Relay socket; 4 changeover contacts

www.wago.com/858-100

Downloads

Documentation

Bid Text

858-164 X81 - Datei	2019. 2. 19.	xml 3.9 kB	Download
858-164 doc - Datei	2017. 11. 29.	doc 26.6 kB	Download

Additional Information

Disposal; Electrical and electronic equipment, Packaging	V 1.0.0	pdf 265.8 kB	Download

CAD/CAE-Data

CAE data

EPLAN Data Portal 858-164	URL	Download
WSCAD Universe 858-164	URL	Download

Environmental Product Compliance

Compliance Search

Environmental Product Compliance 858-164 Basic relay; Nominal input voltage: 12 VDC	URL	Download

Installation Notes

Subject to changes. Please also observe the further product documentation!

WAGO GmbH & Co. KG
Hansastr. 27
32423 Minden
Phone: +49571 887-0 | Fax: +49571 887-169
Email: info.de@wago.com | Web: www.wago.com

Do you have any questions about our products?
We are always happy to take your call at +49 (571) 887-44222.