THESE DRAWINGS ARE THE PROPERTY OF QUALTEK ELECTRONICS AND NOT TO BE REPRODUCED FOR OR COMMUNICATED TO A THIRD PARTY WITHOUT THE EXPRESS WRITTEN PERMISSION OF AN OFFICER OF QUALTEK ELECTRONICS.

REVISION			
REV.	DESCRIPTION	DATE	APPROVED
B	RoHS Compliancy	06-01-06	DP

1. PHYSICAL DIMENSIONS

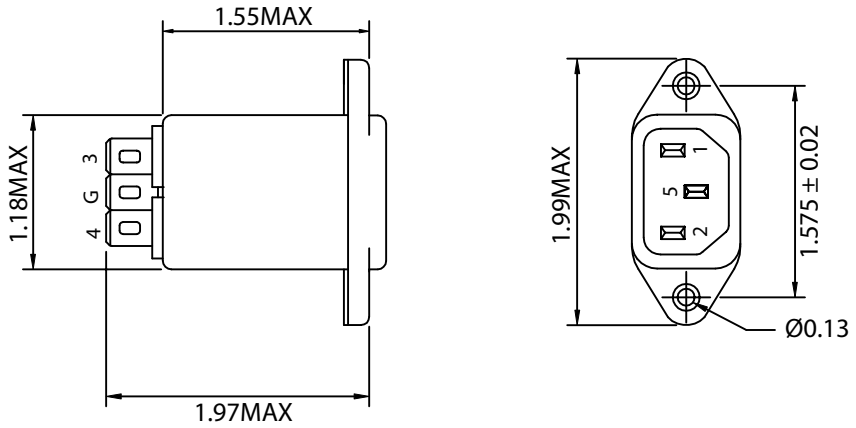

CUTOUT (MOUTING FROM FRONT)

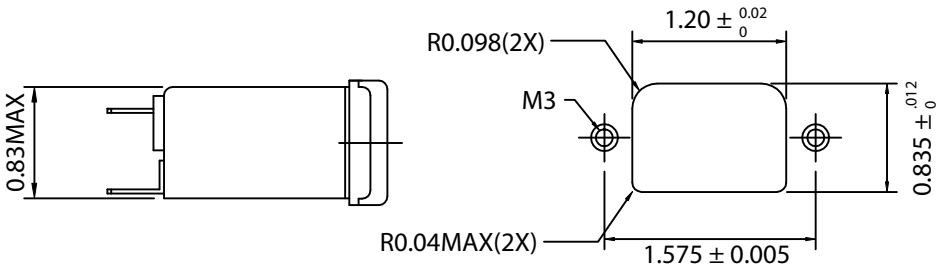

2. ELECTRICAL SCHEMATIC

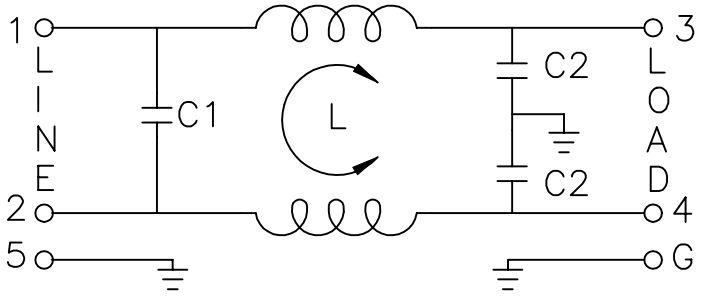

L: 0.8mH
C1: 0.1uF
C2: 3300pF

ELECTRICAL CHARACTERISTICS:

1-1. VOLTAGE RATING.....115/250VAC

1-2. CURRENT RATING
A. @ 115 VAC.....6 A RMS MAX
B. @ 250 VAC.....6 A RMS MAX

1-3. OPERATING FREQUENCY.....50/60Hz

1-4. LEAKAGE CURRENT: EACH LINE TO GROUND
A. @ 115 VAC 60Hz.....0.25 mA MAX
B. @ 250 VAC 50Hz.....0.45 mA MAX

1-5. HIPOT RATING (FOR ONE MINUTE)
A. LINE TO GROUND.....2250 VDC
B. LINE TO LINE.....1450 VDC

1-6. MINIMUM INSERTION LOSS IN dB: (AT 50 OHM SYSTEM)

FREQ. MHz	.01	.05	.10	.15	.50	1.0	5.0	10	30
COM. MODE dB	/	6	11	15	25	32	45	50	50
DIF. MODE dB	/	/	/	/	/	/	/	/	/

1-7. OPERATING TEMPERATURE.....-25° TO +85° C

1-8. SAFETY:

1-9. RoHS COMPLIANT

CONTROLLED

Dim range (mm)	Tolerance +/- (mm)
0-1	0.15
1-6	0.20
6-18	0.30
18-50	0.50
50-120	0.70
120-250	0.90
250-500	1.20

Qualtek Electronics Corp.
PPC DIVISION

Part Number: 858-06/009 RoHS Compliant

Description: EMI FILTER

	UNIT: in	REV. B
Drawn / Date	Checked / Date	Approved / Date
B.ZHANG 09-17-01	09-17-01	JJH / 09-17-01