8550 TA

AC axial compact fan



ebm-papst St. Georgen GmbH & Co. KG
Hermann-Papst-Straße 1
D-78112 St. Georgen
Phone +49 7724 81-0
Fax +49 7724 81-1309
info2@de.ebmpapst.com
www.ebmpapst.com

Nominal data

Type	8550 TA	
Phase		1~
Nominal voltage	VAC	230
Frequency	Hz	50
Speed	min^{-1}	2650
Power input	W	12.0
Min. ambient temperature	°C	-10
Max. ambient temperature	°C	70
Air flow	m^3/h	38
Sound pressure level	dB(A)	25

ml = max. load · me = max. efficiency · fa = running at free air · cs = customer specs · cu = customer unit
Subject to alterations

AC axial compact fan

Technical features

General description	AC voltage fan with external rotor shaded-pole motor. Protected from overload by impedance protection. Impeller and mounting bracket made of metal. Inlet via mounting bracket. Rotational direction clockwise looking at rotor. Electrical connection to 2 single strands. Strand ends bared and tin-plated. Mass 370 g. Please note our new ACmaxx series. With identical fastening dimensions and voltages, this series achieves higher energy efficiency.
Mass	0.370 kg
Dimensions	76 Ø x 37 mm
Material of impeller	Metal
Direction of air flow	Inlet via mounting bracket.
Direction of rotation	Right, looking at rotor
Bearing	Sintec sleeve bearing system
Lifetime L10 at 40 °C	52500 h
Lifetime L10 at maximum temperature	25000 h
Connection line	2 single strands AWG 28, TR 64
Motor protection	Protected from overload using impedance protection
Approval	VDE, CSA, UL, CE

ebm-papst St. Georgen GmbH & Co. KG · Hermann-Papst-Straße 1 · D-78112 St. Georgen · Phone +49 7724 81-0 · Fax +49 7724 81-1309 · info2@de.ebmpapst.com · www.ebmpapst.com

AC axial compact fan

Product drawing

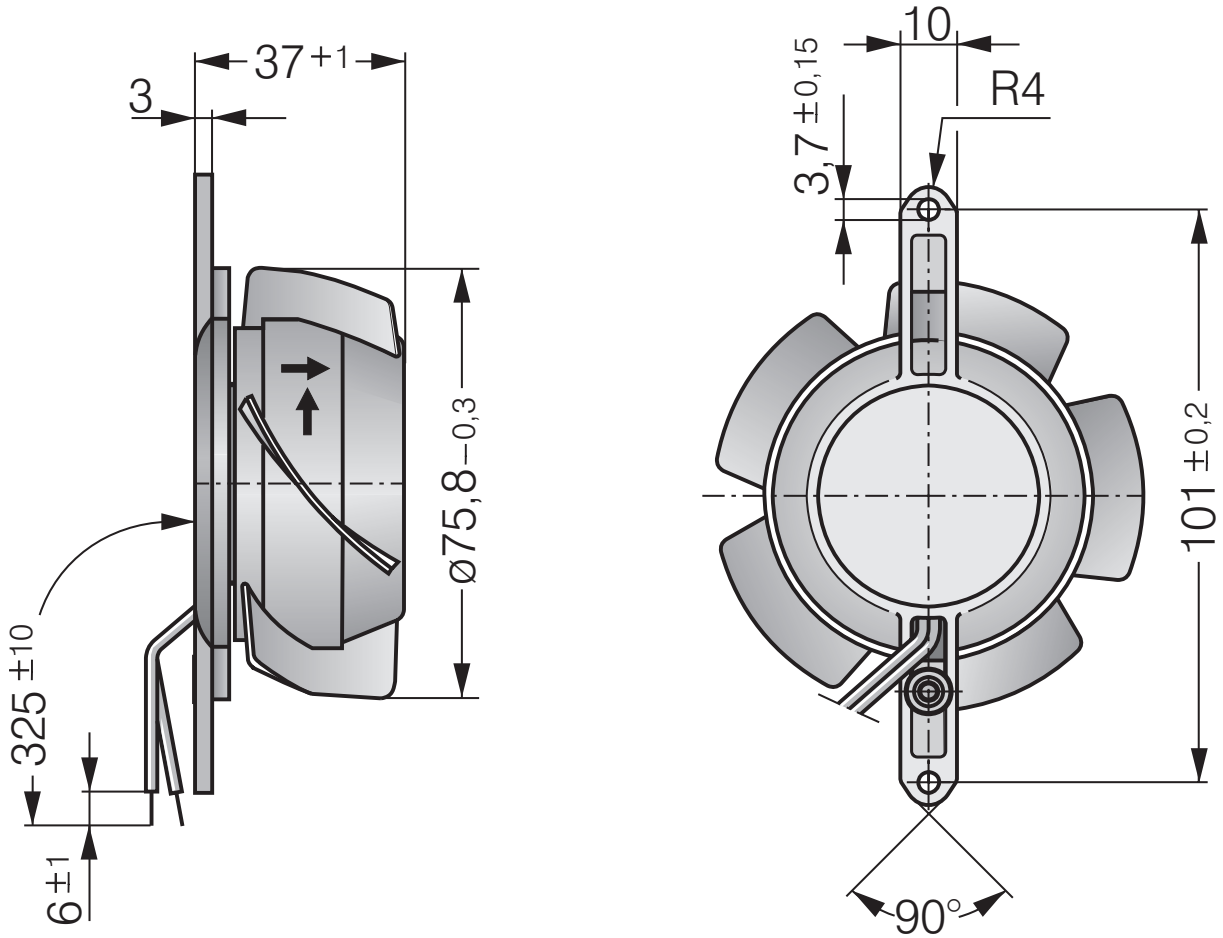

ebm-papst St. Georgen GmbH & Co. KG · Hermann-Papst-Straße 1 · D-78112 St. Georgen · Phone +49 7724 81-0 · Fax +49 7724 81-1309 · info2@de.ebmpapst.com · www.ebmpapst.com