Description

The 8545 is a low skew, high performance 1-to-4 LVCMOS/LVTTL-to-LVDS Clock Fanout Buffer. Utilizing Low Voltage Differential Signaling (LVDS) the 8545 provides a low power, low noise, solution for distributing clock signals over controlled impedances of 100Ω. The 8545 accepts a LVCMOS/LVTTL input level and translates it to 3.3V LVDS output levels.

Guaranteed output and part-to-part skew characteristics make the 8545 ideal for those applications demanding well defined performance and repeatability.

Features

- Four differential LVDS output pairs
- Two LVCMOS/LVTTL clock inputs to support redundant or selectable frequency fanout applications
- Maximum output frequency: 650MHz
- Translates LVCMOS/LVTTL input signals to LVDS levels
- Output skew: 40ps (maximum)
- Part-to-part skew: 500ps (maximum)
- Propagation delay: 3.6ns (maximum)
- Additive phase jitter, RMS: 0.13ps (typical)
- Full 3.3Vsupply mode
- 0°C to 70°C ambient operating temperature
- Available in lead-free (RoHS 6) package

Block Diagram

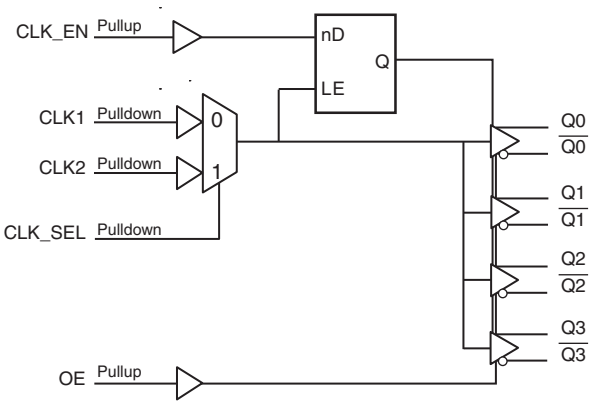

Pin Assignment

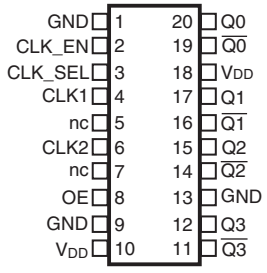

8545

20-Lead TSSOP
6.5mm x 4.4mm x 0.925mm package body
G Package
Top View

Pin Description and Pin Characteristics Tables

Table 1. Pin Descriptions

Number	Name	Type		Description
1, 9, 13	GND	Power		Power supply ground.
2	CLK_EN	Input	Pullup	Synchronizing clock enable. When HIGH, clock outputs follows clock input. When LOW, Q outputs are forced low, $\overline{Q}$ outputs are forced high. LVCMOS / LVTTL interface levels.
3	CLK_SEL	Input	Pulldown	Clock select input. When HIGH, selects CLK2 input. When LOW, selects CLK1 input. LVCMOS / LVTTL interface levels.
4	CLK1	Input	Pulldown	Single-ended clock input. LVCMOS/LVTTL interface levels.
5, 7	nc	Unused		No connect.
6	CLK2	Input	Pulldown	Single-ended clock input. LVCMOS/LVTTL interface levels.
8	OE	Input	Pullup	Output enable. Controls enabling and disabling of outputs Q0/$\overline{Q0}$ through Q3/$\overline{Q3}$. LVCMOS/LVTTL interface levels.
10, 18	V_{DD}	Power		Positive supply pins.
11, 12	$\overline{Q3}$, Q3	Output		Differential output pair. LVDS interface levels.
14, 15	$\overline{Q2}$, Q2	Output		Differential output pair. LVDS interface levels.
16, 17	$\overline{Q1}$, Q1	Output		Differential output pair. LVDS interface levels.
19, 20	$\overline{Q0}$, Q0	Output		Differential output pair. LVDS interface levels.

NOTE: *Pullup and Pulldown* refer to internal input resistors. See Table 2, *Pin Characteristics,* for typical values.

Table 2. Pin Characteristics

Symbol	Parameter	Test Conditions	Minimum	Typical	Maximum	Units
C_{IN}	Input Capacitance			4		pF
R_{PULLUP}	Input Pullup Resistor			51		kΩ
$R_{PULLDOWN}$	Input Pulldown Resistor			51		kΩ

Function Tables

Table 3A. Control Input Function Table

Inputs				Outputs	
OE	**CLK_EN**	**CLK_SEL**	**Selected Source**	**Q0:Q3**	**$\overline{Q0}$:$\overline{Q3}$**
0	X	X		Hi-Z	Hi-Z
1	0	0	CLK1	Low	High
1	0	1	CLK2	Low	High
1	1	0	CLK1	Active	Active
1	1	1	CLK2	Active	Active

After CLK_EN switches, the clock outputs are disabled or enabled following a rising and falling input clock edge as shown in Figure 1. In the active mode, the state of the outputs are a function of the CLK1 and CLK2 inputs as described in Table 3B.

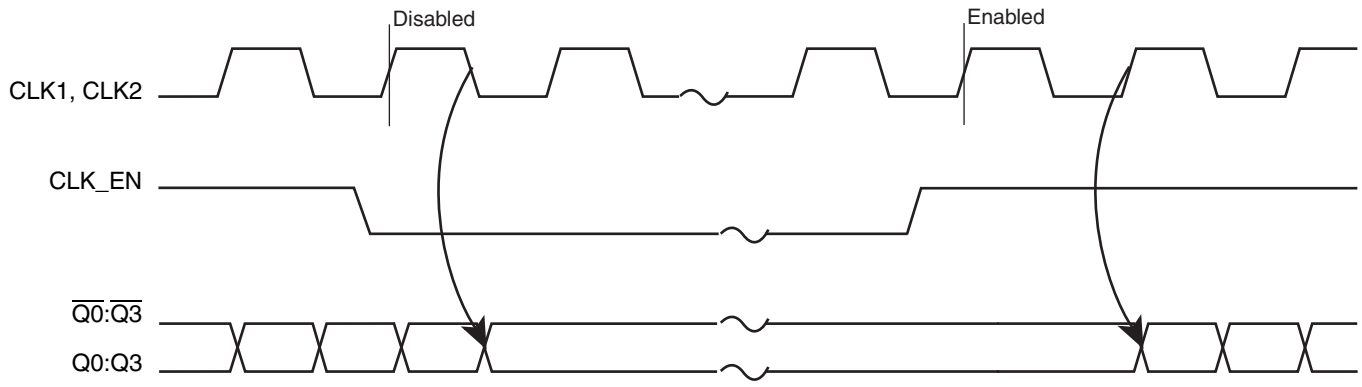

Figure 1. CLK_EN Timing Diagram

Table 3B. Clock Input Function Table

Inputs	Outputs	
CLK1 or CLK2	**Q0:Q3**	**$\overline{Q0}$:$\overline{Q3}$**
0	LOW	HIGH
1	HIGH	LOW

Absolute Maximum Ratings

NOTE: Stresses beyond those listed under *Absolute Maximum Ratings* may cause permanent damage to the device. These ratings are stress specifications only. Functional operation of product at these conditions or any conditions beyond those listed in the *DC Characteristics or AC Characteristics* is not implied. Exposure to absolute maximum rating conditions for extended periods may affect product reliability.

Item	Rating
Supply Voltage, V_{DD}	4.6V
Inputs, V_I	-0.5V to V_{DD} + 0.5V
Outputs, I_O Continuous Current Surge Current	 10mA 15mA
Package Thermal Impedance, θ_{JA}	73.2°C/W (0 lfpm)
Storage Temperature, T_{STG}	-65°C to 150°C

DC Electrical Characteristics

Table 4A. Power Supply DC Characteristics, V_{DD} = 3.3V ± 5%, T_A = 0°C to 70°C

Symbol	Parameter	Test Conditions	Minimum	Typical	Maximum	Units
V_{DD}	Positive Supply Voltage		3.135	3.3	3.465	V
I_{DD}	Power Supply Current				50	mA

Table 4B. LVCMOS/LVTTL DC Characteristics, V_{DD} = 3.3V ± 5%, T_A = 0°C to 70°C

Symbol	Parameter		Test Conditions	Minimum	Typical	Maximum	Units
V_{IH}	Input High Voltage			2		V_{DD} + 0.3	V
V_{IL}	Input Low Voltage	CLK1, CLK2		-0.3		1.3	V
		OE, CLK_EN, CLK_SEL		-0.3		0.8	V
I_{IH}	Input High Current	CLK1, CLK2, CLK_SEL	V_{DD} = V_{IN} = 3.465V			150	µA
		OE, CLK_EN	V_{DD} = V_{IN} = 3.465V			5	µA
I_{IL}	Input Low Current	CLK1, CLK2, CLK_SEL	V_{DD} = 3.465V, V_{IN} = 0V	-5			µA
		OE, CLK_EN	V_{DD} = 3.465V, V_{IN} = 0V	-150			µA

Table 4C. LVDS DC Characteristics, V_{DD} = 3.3V ± 5%, T_A = 0°C to 70°C

Symbol	Parameter	Test Conditions	Minimum	Typical	Maximum	Units
V_{OD}	Differential Output Voltage		200	280	360	mV
ΔV_{OD}	V_{OD} Magnitude Change				40	mV
V_{OS}	Offset Voltage		1.125	1.25	1.375	V
ΔV_{OS}	V_{OS} Magnitude Change			5	25	mV
I_{Oz}	High Impedance Leakage		-10	±1	+10	µA
I_{OFF}	Power Off Leakage		-20	±1	+20	µA
I_{OSD}	Differential Output Short Circuit Current			-3.5	-5	mA
I_{OS}	Output Short Circuit Current			-3.5	-5	mA
V_{OH}	Output Voltage High			1.34	1.6	V
V_{OL}	Output Voltage Low		0.9	1.06		V

AC Electrical Characteristics

Table 5. AC Characteristics, V_{DD} = 3.3V ± 5%, T_A = 0°C to 70°C

Symbol	Parameter	Test Conditions	Minimum	Typical	Maximum	Units
f_{MAX}	Output Frequency				650	MHz
t_{PD}	Propagation Delay; NOTE 1	$f \leq$ 650MHz	1.4		3.6	ns
*t*jit	Buffer Additive Phase Jitter, RMS; refer to Additive Phase Jitter Section	156.25MHz, Integration Range: 12kHz – 20MHz		0.13		ps
*t*sk(o)	Output Skew; NOTE 2, 4				40	ps
*t*sk(pp)	Part-to-Part Skew; NOTE 3, 4				500	ps
t_R / t_F	Output Rise/Fall Time	20% to 80% @ 50MHz	200	400	600	ps
odc	Output Duty Cycle		45	50	55	%

All parameters measured at f_{MAX} unless noted otherwise.
NOTE 1: Measured from V_{DD}/2 of the input to the differential output crossing point.
NOTE 2: Defined as skew between outputs at the same supply voltage and with equal load conditions.
Measured at V_{DD}/2 of the input to the differential output crossing point.
NOTE 3: Defined as skew between outputs on different devices operating at the same supply voltages and with equal load conditions. Using the same type of inputs on each device, the outputs are measured at the differential cross points.
NOTE 4: This parameter is defined in accordance with JEDEC Standard 65.

Additive Phase Jitter

The spectral purity in a band at a specific offset from the fundamental compared to the power of the fundamental is called the ***dBc Phase Noise.*** This value is normally expressed using a Phase noise plot and is most often the specified plot in many applications. Phase noise is defined as the ratio of the noise power present in a 1Hz band at a specified offset from the fundamental frequency to the power value of the fundamental. This ratio is expressed in decibels (dBm) or a ratio of the power in the 1Hz band to the power in the fundamental. When the required offset is specified, the phase noise is called a ***dBc*** value, which simply means dBm at a specified offset from the fundamental. By investigating jitter in the frequency domain, we get a better understanding of its effects on the desired application over the entire time record of the signal. It is mathematically possible to calculate an expected bit error rate given a phase noise plot.

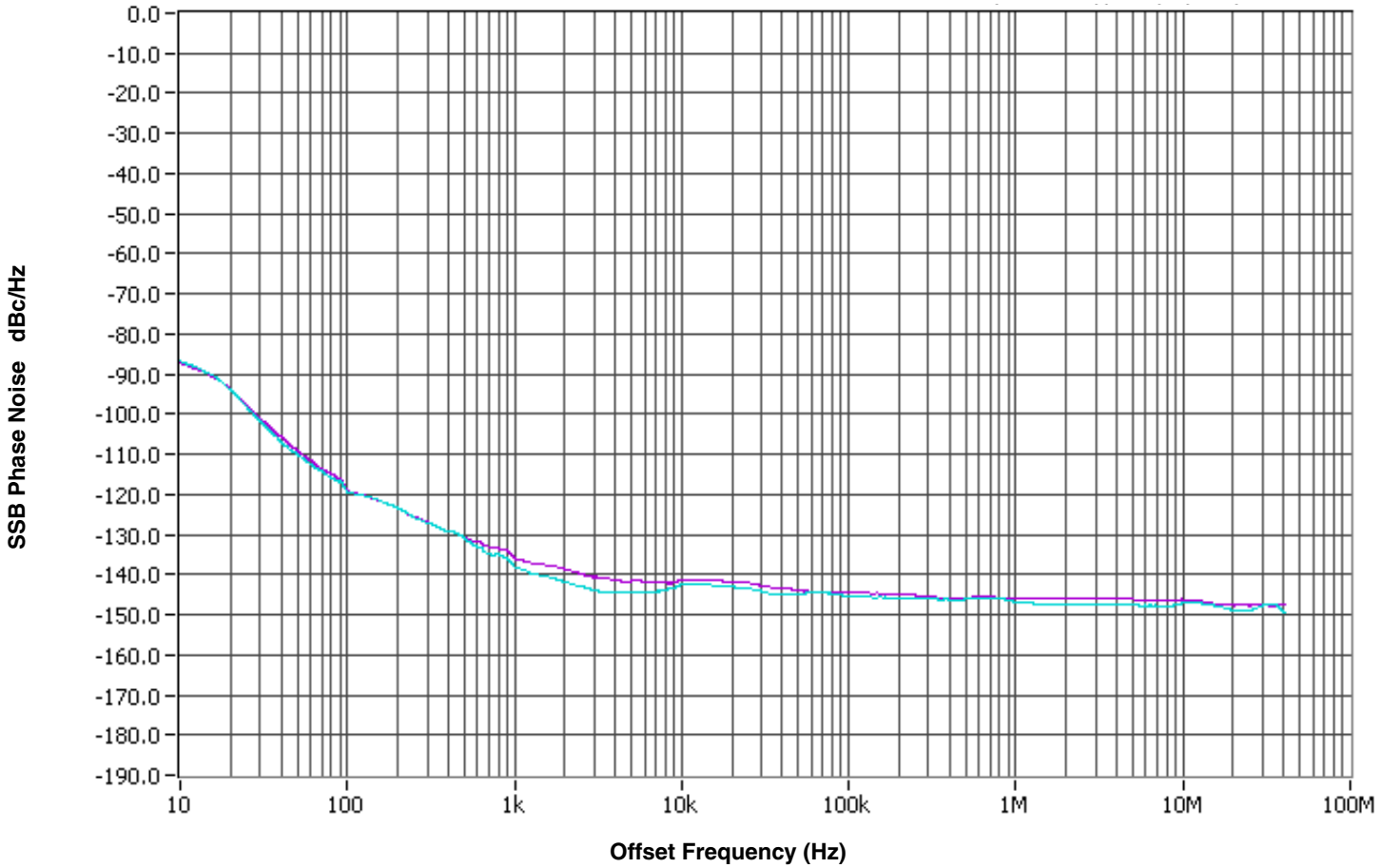

As with most timing specifications, phase noise measurements have issues. The primary issue relates to the limitations of the equipment. Often the noise floor of the equipment is higher than the noise floor of the device. This is illustrated above. The device meets the noise floor of what is shown, but can actually be lower. The phase noise is dependant on the input source and measurement equipment.

Parameter Measurement Information

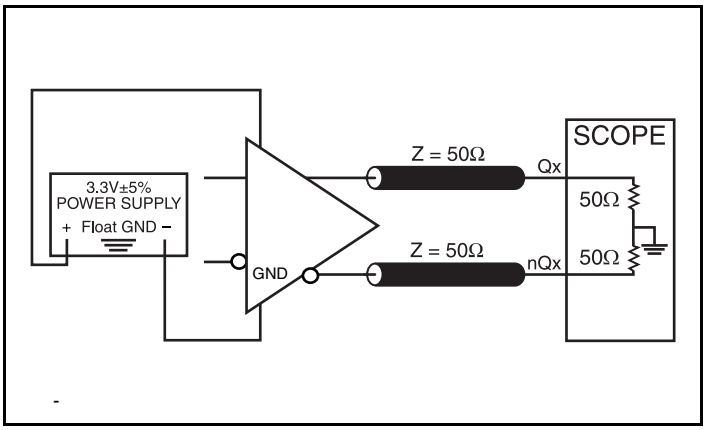

3.3V LVDS Output Load AC Test Circuit

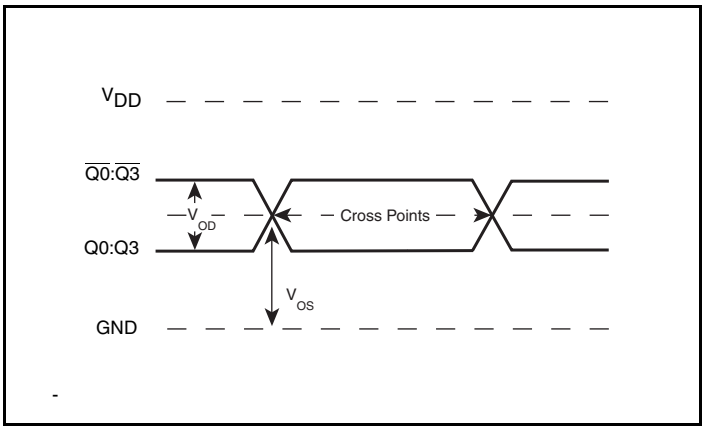

Differential Output Level

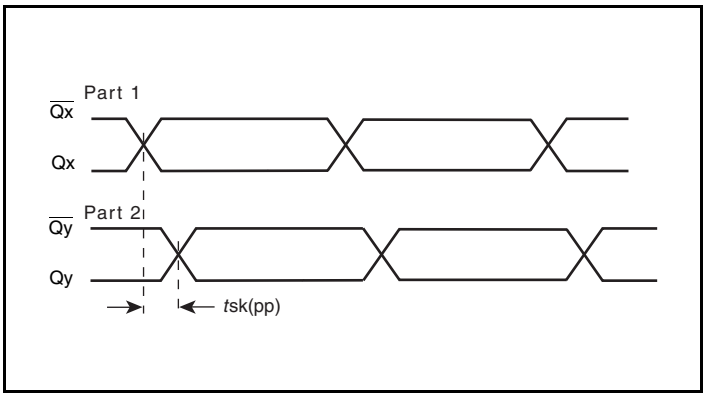

Part-to-Part Skew

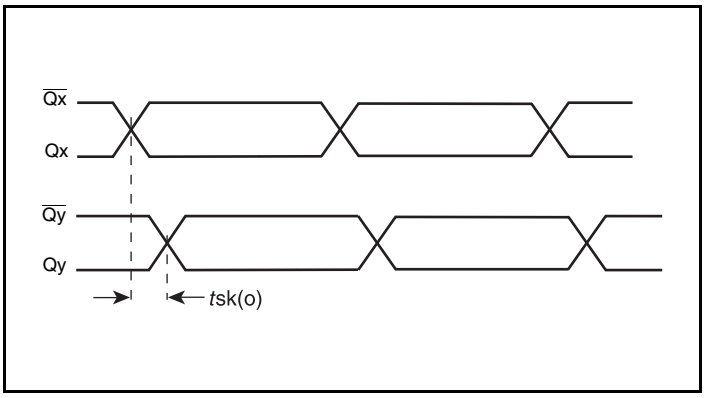

Output Skew

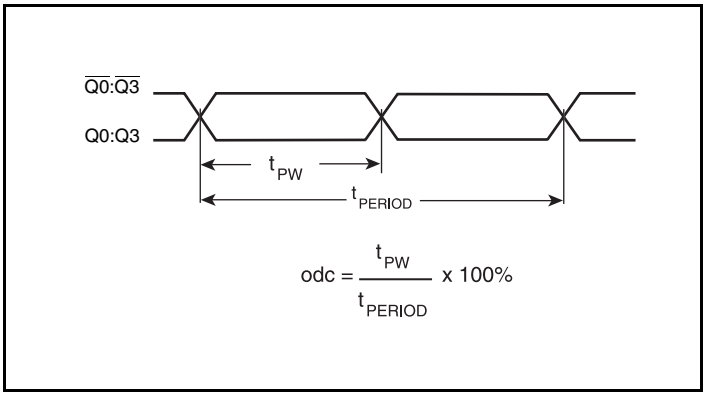

Output Duty Cycle/Pulse Width/Period

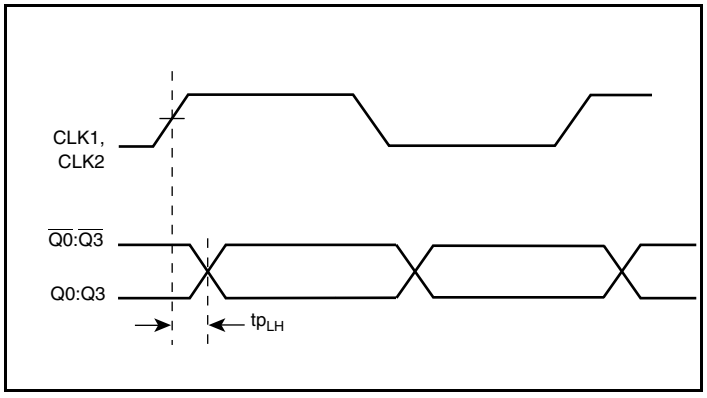

Propagation Delay

Parameter Measurement Information, continued

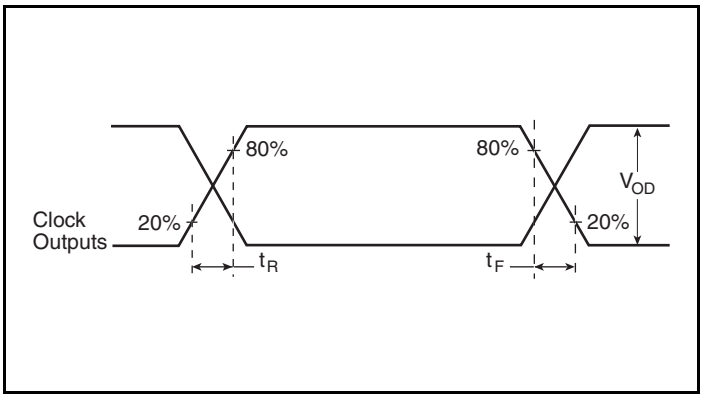

Output Rise/Fall Time

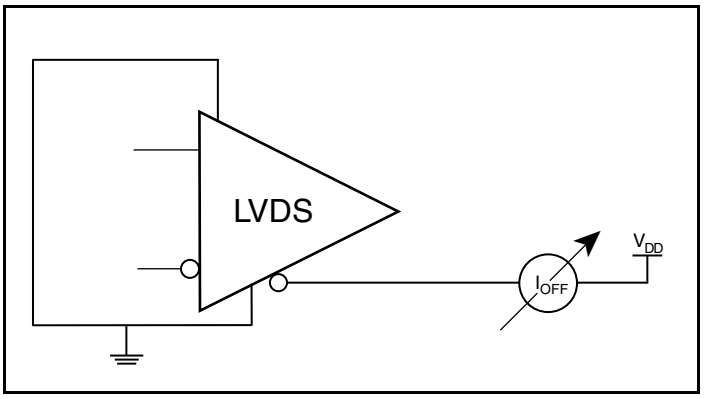

Power Off Leakage Setup

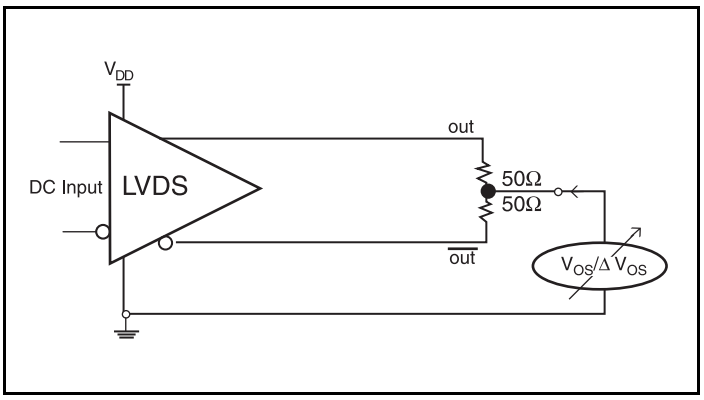

Offset Voltage Setup

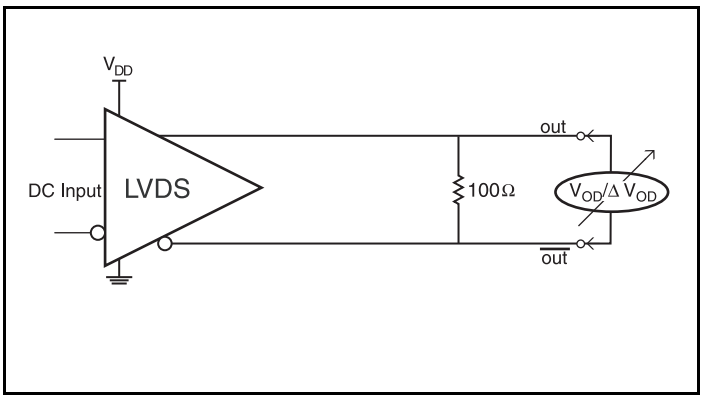

Differential Output Voltage Setup

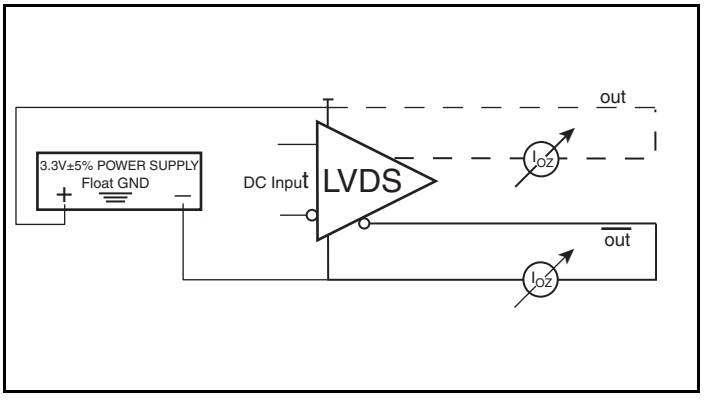

High Impedance Leakage Current Setup

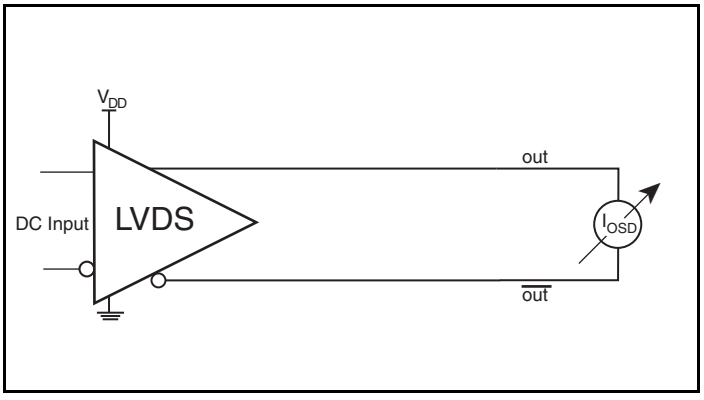

Differential Output Short Circuit Setup

Parameter Measurement Information, continued

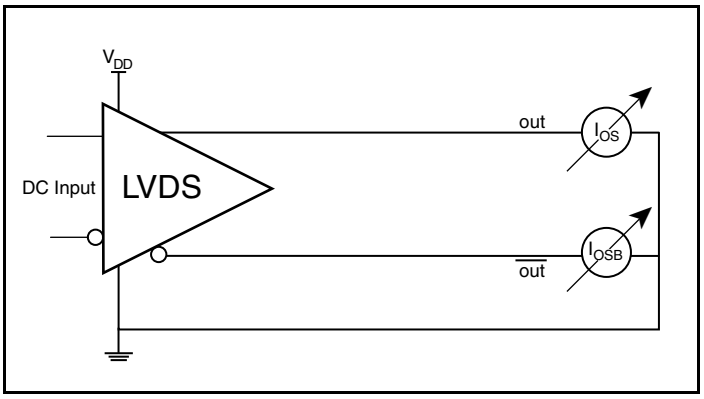

Output Short Circuit Current Setup

Applications Information

Recommendations for Unused Input and Output Pins

Inputs:

CLK Inputs

For applications not requiring the use of a clock input, it can be left floating. Though not required, but for additional protection, a 1kΩ resistor can be tied from the CLK input to ground.

LVCMOS Control Pins

All control pins have internal pull-ups or pull-downs; additional resistance is not required but can be added for additional protection. A 1kΩ resistor can be used.

Outputs:

LVDS Outputs

All unused LVDS output pairs can be either left floating or terminated with 100Ω across. If they are left floating, there should be no trace attached.

3.3V LVDS Driver Termination

A general LVDS interface is shown in Figure 2. In a 100Ω differential transmission line environment, LVDS drivers require a matched load termination of 100Ω across near the receiver input. For a multiple LVDS outputs buffer, if only partial outputs are used, it is recommended to terminate the unused outputs.

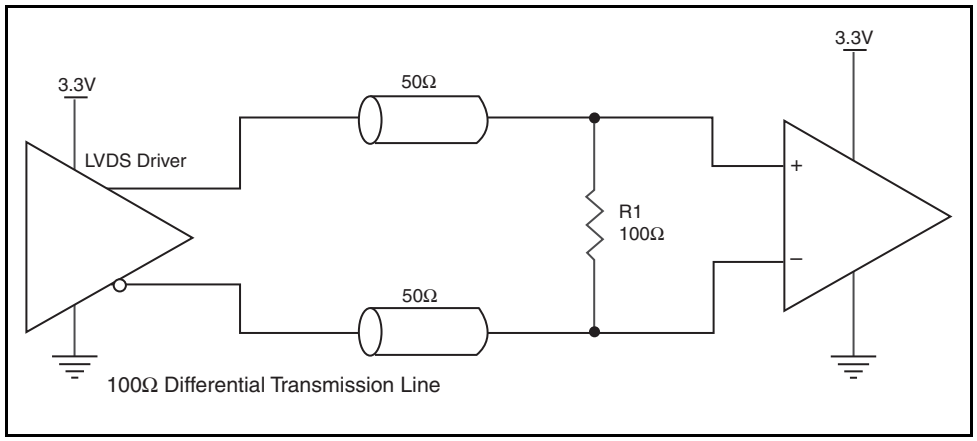

Figure 2. Typical LVDS Driver Termination

Power Considerations

This section provides information on power dissipation and junction temperature for the 8545.
Equations and example calculations are also provided.

1. Power Dissipation.

The total power dissipation for the 8545 is the sum of the core power plus the power dissipated in the load(s).
The following is the power dissipation for V_{DD} = 3.3V + 5% = 3.465V, which gives worst case results.

NOTE: Please refer to Section 3 for details on calculating power dissipated in the load.

- Power $(core)_{MAX} = V_{DD_MAX} * I_{DD_MAX}$ = 3.465V * 50mA = **173.25mW**

2. Junction Temperature.

Junction temperature, Tj, is the temperature at the junction of the bond wire and bond pad and directly affects the reliability of the device. The maximum recommended junction temperature is 125°C.

The equation for Tj is as follows: $Tj = \theta_{JA} * Pd_total + T_A$

Tj = Junction Temperature

θ_{JA} = Junction-to-Ambient Thermal Resistance

Pd_total = Total Device Power Dissipation (example calculation is in section 1 above)

T_A = Ambient Temperature

In order to calculate junction temperature, the appropriate junction-to-ambient thermal resistance θ_{JA} must be used. Assuming a moderate air flow of 200 linear feet per minute and a multi-layer board, the appropriate value is 66.6°C/W per Table 6 below.

Therefore, Tj for an ambient temperature of 70°C with all outputs switching is:

70°C + 0.173W * 66.6°C/W = 81.5°C. This is well below the limit of 125°C.

This calculation is only an example. Tj will obviously vary depending on the number of loaded outputs, supply voltage, air flow and the type of board (single layer or multi-layer).

Table 6. Thermal Resitance θ_{JA} for 20 Lead TSSOP, Forced Convection

θ_{JA} by Velocity			
Linear Feet per Minute	**0**	**200**	**500**
Single-Layer PCB, JEDEC Standard Test Boards	114.5°C/W	98.0°C/W	88.0°C/W
Multi-Layer PCB, JEDEC Standard Test Boards	73.2°C/W	66.6°C/W	63.5°C/W

Reliability Information

Table 7. θ_{JA} vs. Air Flow Table for a 20 Lead TSSOP

θ_{JA} by Velocity			
Linear Feet per Minute	**0**	**200**	**500**
Single-Layer PCB, JEDEC Standard Test Boards	114.5°C/W	98.0°C/W	88.0°C/W
Multi-Layer PCB, JEDEC Standard Test Boards	73.2°C/W	66.6°C/W	63.5°C/W

Transistor Count

The transistor count for 8545 is: 644

Package Outline and Package Dimensions

Package Outline - G Suffix for 20 Lead TSSOP

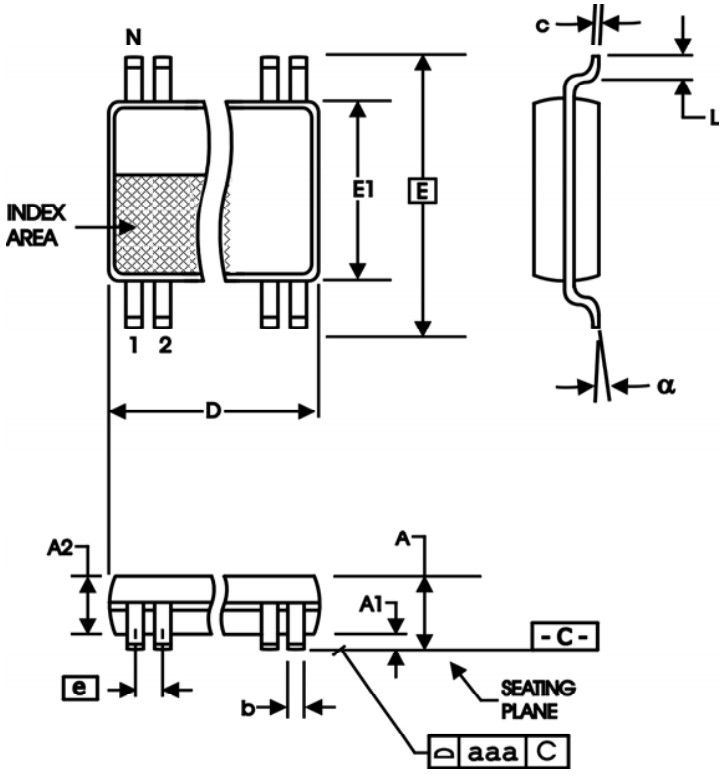

Table 8. Package Dimensions

All Dimensions in Millimeters		
Symbol	**Minimum**	**Maximum**
N	20	
A		1.20
A1	0.05	0.15
A2	0.80	1.05
b	0.19	0.30
c	0.09	0.20
D	6.40	6.60
E	6.40 Basic	
E1	4.30	4.50
e	0.65 Basic	
L	0.45	0.75
α	0°	8°
aaa		0.10

Reference Document: JEDEC Publication 95, MO-153

Ordering Information

Table 9. Ordering Information

Part/Order Number	Marking	Package	Shipping Packaging	Temperature
ICS8545BGLF	ICS8545BGLF	20 Lead TSSOP, Lead-Free	Tube	0°C to 70°C
ICS8545BGLFT	ICS8545BGLF	20 Lead TSSOP, Lead-Free	Tape & Reel	0°C to 70°C

NOTE:"LF" suffix to the part number are the Pb-Free configuration and are RoHS compliant.

Revision History Sheet

Rev	Table	Page	Description of Change	Date
A	T4C	4	In the V_{OL} row, 1.06 has been moved to the Typical column from the maximum column.	9/21/01
A		3	Revised Figure 1, CLK_EN Timing Diagram.	10/17/01
A		3	Revised Figure 1, CLK_EN Timing Diagram.	11/2/01
B	4C	1 4 8-9	Features - deleted bullet "Designed to meet or exceed the requirements of ANSI TIA/EIA-644" LVDS Table - changed V_{OD} typical value from 350mV to 280mV. Updated LVDS diagrams.	9/19/02
C	T2	2 4 8	Pin Characteristics - changed C_{IN} 4pF max. to 4pF typical. Absolute Maximum Ratings - changed Output Rating. Added *LVDS Driver Termination* section. Updated format throughout data sheet.	1/5/04
C	T8	1 8 11	Features Section - added Lead-Free bullet. Added R*ecommendations for Unused Input and Output Pins.* Ordering Information Table - added lead-free part number, marking and note.	1/17/06
D	T5	1 5 6 11	Features Section - added Additive Phase Jitter bullet. AC Characteristics Table - added Additive Phase Jitter spec. Added *Additive Phase Jitter Plot.* Added *Power Considerations* section.	5/31/07
D	T9	13	Remove leaded orderable parts from Ordering Information table	11/15/12
E	T9	1 1 11 13	General Description - deleted HiperClocks logo and reference in first paragraph. Features Section - last bullet, deleted leaded reference. Power Considerations/Junction Temperature - deleted HiperClocks reference. Ordering Information Table - deleted Tape & Reel count. Deleted “ICS” prefix from part number throughout the datasheet. Updated header/footer.	1/5/16

Corporate Headquarters
6024 Silver Creek Valley Road
San Jose, CA 95138 USA
www.IDT.com

Sales
1-800-345-7015 or 408-284-8200
Fax: 408-284-2775
www.IDT.com/go/sales

Tech Support
www.idt.com/go/support

DISCLAIMER Integrated Device Technology, Inc. (IDT) reserves the right to modify the products and/or specifications described herein at any time, without notice, at IDT's sole discretion. Performance specifications and operating parameters of the described products are determined in an independent state and are not guaranteed to perform the same way when installed in customer products. The information contained herein is provided without representation or warranty of any kind, whether express or implied, including, but not limited to, the suitability of IDT's products for any particular purpose, an implied warranty of merchantability, or non-infringement of the intellectual property rights of others. This document is presented only as a guide and does not convey any license under intellectual property rights of IDT or any third parties.

IDT's products are not intended for use in applications involving extreme environmental conditions or in life support systems or similar devices where the failure or malfunction of an IDT product can be reasonably expected to significantly affect the health or safety of users. Anyone using an IDT product in such a manner does so at their own risk, absent an express, written agreement by IDT.

Integrated Device Technology, IDT and the IDT logo are trademarks or registered trademarks of IDT and its subsidiaries in the United States and other countries. Other trademarks used herein are the property of IDT or their respective third party owners.

For datasheet type definitions and a glossary of common terms, visit www.idt.com/go/glossary.

Copyright ©2016 Integrated Device Technology, Inc. All rights reserved.