51 8514 A 02

Direct connectors for insert cards, pitch 2.5/2.54/5.0/ 5.08 mm

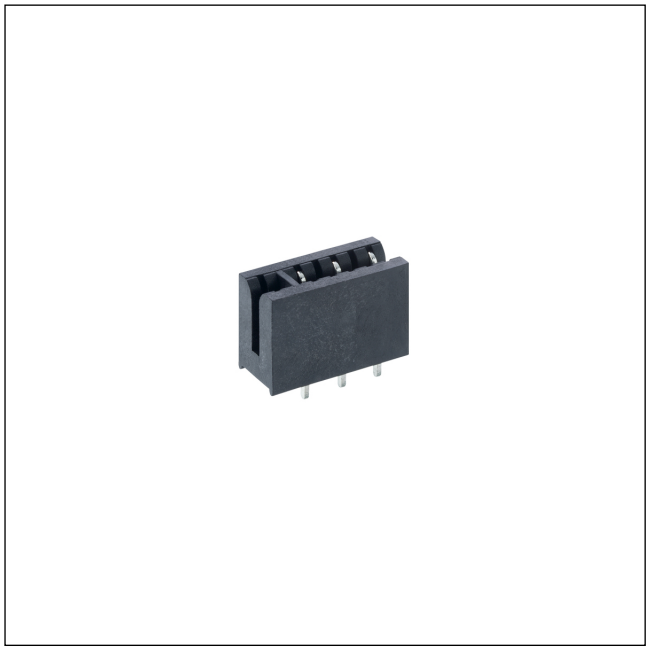

Socket board for direct mating, with or without keying rib, with solder pins
contact pitch 5.08 mm

State: New

51 8514 A 02

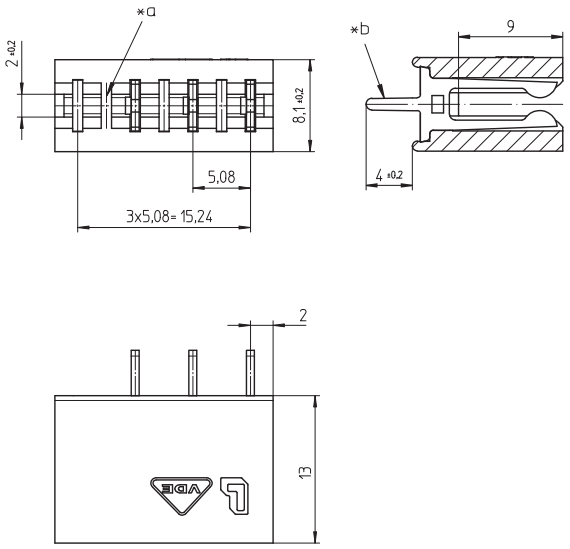

*a keying rib
*b solder pin for bore hole in printed circuit board Ø 1.3 mm

Environmental conditions

Temperature range	-40 °C/+110 °C (8514 A 02) -40 °C/+120 °C (8514 A 02 M13) [1]

[1] upper limit temperature (insulating body) RTI (electrical) of the UL Yellow Card

Materials

Insulating body	PPE/PS GF, V-1 according to UL94 (8514 A 02 M13) PA GF, V-0 according to UL94 (8514 A 02 M13) [1]
Contact spring	CuSn, pre-nickel and tin-plated

[1] M13: component glow wire resistant (GWT 750 °C), testing acc. to IEC 60695-2-11, assessment acc. to IEC 60335-1 (flame < 2 s)

Mechanical data

Mating with	Leiterplatte 1,5 ± 0,14 mm
Withdrawal force/contact	≥ 0,6 N [1]

[1] measured with a polished steel pin, nominal thickness 1.5 mm

Electrical data (at T_{amb} 20 °C)

Contact resistance	≤ 3 mΩ
Rated current	5 A (T_U 60 °C)
Rated voltage	250 V AC
Material group	IIIa (IEC)/2 (UL) (CTI ≥ 250)
Creepage distance	4,3 mm
Clearance	4,3 mm
Insulation resistance	> 10 GΩ

Associated products

Accessories

F FD FF

FL

51 8514 A 02

Designation	Pole Number	PU (Pieces)	MDQ (Pieces)
8514 A 02	3	1872	1872

Packaging:
in bar stock carriers, in a cardboard box