## General Description

The 843751 is a low jitter, high performance clock generator. The 843751 is designed for use in the SAS-2 interconnect and the three transport protocols that use the SAS-2 interconnect: Serial SCSI Protocol (SSP), Serial ATA Tunneled Protocol (STP), and Serial Management Protocol (SMP). The 843751 has excellent (<1ps) RMS phase jitter, over the SAS defined integration range. The 843751 uses an external, 25MHz, parallel resonant crystal to generate 75MHz. This silicon based approach provides excellent frequency stability and reliability. The 843751 features up, down, and center spread spectrum (SSC) clocking techniques. The up, down and center SSC will be required in the SAS-2 applications that have three clock trees in the HBA and expander ASICs.

## Features

- Designed for use in SAS, SAS-2 systems
- Up, down and center Spread Spectrum Clocking (SSC)
- One differential 3.3V or 2.5V LVPECL output pair
- Output frequency: 75MHz
- RMS phase jitter @ 75MHz, (900kHz – 7.5MHz): 0.734ps (typical) @ 3.3V
- 3.3V or 2.5V operating supply modes
- 0°C to 70°C ambient operating temperature
- Available in lead-free (RoHS 6) package
- **Functional replacement part: 843002AYLF**

## Applications

- SAS/SATA Host Bus Adapters
- SATA Port Multipliers
- SAS I/O Controllers
- TapeDrive and HDD Array Controllers
- SAS Edge and Fanout Expanders
- HDDs and TapeDrives
- Disk Storage Enterprise

## Block Diagram

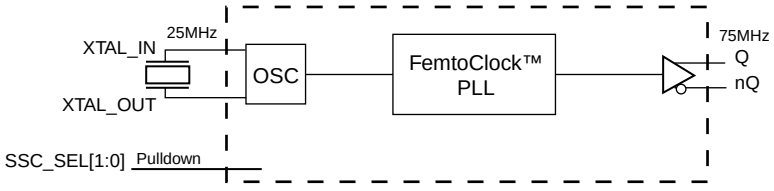


## Pin Assignment

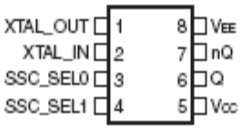


**843751**
**8-Lead SOIC, 150 Mil**
**3.90mm x 4.90mm x 1.375mm package body**
**M Package**
**Top View**

 ©2015 Integrated Device Technology, Inc.

## Table 1. Pin Descriptions

| Number | Name | Type | | Description |
|---|---|---|---|---|
| 1, 2 | XTAL_OUT, XTAL_IN | Input | | Crystal oscillator interface. XTAL_IN is the input, XTAL_OUT is the output. |
| 3, 4 | SSC_SEL0, SSC_SEL1 | Input | Pulldown | SSC select pins. See Table 3A. LVCMOS/LVTTL interface levels. |
| 5 | $V_{CC}$ | Power | | Power supply pin. |
| 6, 7 | Q, nQ | Output | | Differential clock outputs. LVPECL interface levels. |
| 8 | $V_{EE}$ | Power | | Negative supply pin. |

NOTE: *Pulldown* refers to internal input resistors. See Table 2, *Pin Characteristics,* for typical values.

## Table 2. Pin Characteristics

| Symbol | Parameter | Test Conditions | Minimum | Typical | Maximum | Units |
|---|---|---|---|---|---|---|
| $C_{IN}$ | Input Capacitance | | | 4 | | pF |
| $R_{PULLDOWN}$ | Input Pulldown Resistor | | | 51 | | kΩ |

## Function Tables

**Table 3. SSC_SEL[1:0] Function Table**

| Inputs | | Mode |
|---|---|---|
| SSC_SEL1 | SSC_SEL0 | |
| 0 (default) | 0 (default) | SSC Off |
| 0 | 1 | 0.5% Down-spread |
| 1 | 0 | 0.5% Up-spread |
| 1 | 1 | 0.5% Center-spread |

 ©2015 Integrated Device Technology, Inc.

# Absolute Maximum Ratings

NOTE: Stresses beyond those listed under *Absolute Maximum Ratings* may cause permanent damage to the device. These ratings are stress specifications only. Functional operation of product at these conditions or any conditions beyond those listed in the *DC Characteristics or AC Characteristics* is not implied. Exposure to absolute maximum rating conditions for extended periods may affect product reliability.

| Item | Rating |
|---|---|
| Supply Voltage, $V_{CC}$ | 4.6V |
| Inputs, $V_I$ | -0.5V to $V_{CC}$ + 0.5V |
| Outputs, $I_O$<br>Continuos Current<br>Surge Current | <br>50mA<br>100mA |
| Package Thermal Impedance, $\theta_{JA}$ | 96°C/W (0 lfpm) |
| Storage Temperature, $T_{STG}$ | -65°C to 150°C |

# DC Electrical Characteristics

**Table 4A. Power Supply DC Characteristics,** $V_{CC}$ = 3.3V ± 5%, $V_{EE}$ = 0V, $T_A$ = 0°C to 70°C

| Symbol | Parameter | Test Conditions | Minimum | Typical | Maximum | Units |
|---|---|---|---|---|---|---|
| $V_{CC}$ | Power Supply Voltage | | 3.135 | 3.3 | 3.465 | V |
| $I_{EE}$ | Power Supply Current | | | | 77 | mA |

**Table 4B. Power Supply DC Characteristics,** $V_{CC}$ = 2.5V ± 5%, $V_{EE}$ = 0V, $T_A$ = 0°C to 70°C

| Symbol | Parameter | Test Conditions | Minimum | Typical | Maximum | Units |
|---|---|---|---|---|---|---|
| $V_{CC}$ | Power Supply Voltage | | 2.375 | 2.5 | 2.625 | V |
| $I_{EE}$ | Power Supply Current | | | | 75 | mA |

**Table 4C. LVCMOS/LVTTL DC Characteristics,** $V_{CC}$ = 3.3V ± 5% or 2.5V ± 5%, $V_{EE}$ = 0V, $T_A$ = 0°C to 70°C

| Symbol | Parameter | | Test Conditions | Minimum | Typical | Maximum | Units |
|---|---|---|---|---|---|---|---|
| $V_{IH}$ | Input High Voltage | | $V_{CC}$ = 3.3V | 2 | | $V_{CC}$ + 0.3 | V |
| | | | $V_{CC}$ = 2.5V | 1.7 | | $V_{CC}$ + 0.3 | V |
| $V_{IL}$ | Input Low Voltage | | $V_{CC}$ = 3.3V | -0.3 | | 0.8 | V |
| | | | $V_{CC}$ = 2.5V | -0.3 | | 0.7 | V |
| $I_{IH}$ | Input High Current | SSC_SEL[0:1] | $V_{CC}$ = $V_{IN}$ = 3.465V or 2.5V | | | 150 | µA |
| $I_{IL}$ | Input Low Current | SSC_SEL[0:1] | $V_{CC}$ = 3.465V or 2.5V, $V_{IN}$ = 0V | -5 | | | µA |

 ©2015 Integrated Device Technology, Inc.

**Table 4D. LVPECL DC Characteristics,** $V_{CC}$ = 3.3V ± 5%, $V_{EE}$ = 0V, $T_A$ = 0°C to 70°C

| Symbol | Parameter | Test Conditions | Minimum | Typical | Maximum | Units |
|---|---|---|---|---|---|---|
| $V_{OH}$ | Output High Voltage; NOTE 1 | | $V_{CC}$ – 1.4 | | $V_{CC}$ – 0.9 | V |
| $V_{OL}$ | Output Low Voltage; NOTE 1 | | $V_{CC}$ – 2.0 | | $V_{CC}$ – 1.7 | V |
| $V_{SWING}$ | Peak-to-Peak Output Voltage Swing | | 0.6 | | 0.9 | V |

NOTE 1: Output termination with 50Ω to $V_{CC}$ – 2V.

**Table 4E. LVPECL DC Characteristics,** $V_{CC}$ = 2.5V ± 5%, $V_{EE}$ = 0V, $T_A$ = 0°C to 70°C

| Symbol | Parameter | Test Conditions | Minimum | Typical | Maximum | Units |
|---|---|---|---|---|---|---|
| $V_{OH}$ | Output High Voltage; NOTE 1 | | $V_{CC}$ – 1.4 | | $V_{CC}$ – 0.9 | V |
| $V_{OL}$ | Output Low Voltage; NOTE 1 | | $V_{CC}$ – 2.0 | | $V_{CC}$ – 1.5 | V |
| $V_{SWING}$ | Peak-to-Peak Output Voltage Swing | | 0.4 | | 0.9 | V |

NOTE 1: Output termination with 50Ω to $V_{CC}$ – 2V.

**Table 5. Crystal Characteristics**

| Parameter | Test Conditions | Minimum | Typical | Maximum | Units |
|---|---|---|---|---|---|
| Mode of Oscillation | | Fundamental | | | |
| Frequency; NOTE 1 | | | 25 | | MHz |
| Equivalent Series Resistance (ESR) | | | | 50 | Ω |
| Shunt Capacitance | | | | 7 | pF |

 ©2015 Integrated Device Technology, Inc.

# AC Electrical Characteristics

**Table 6A. AC Characteristics,** $V_{CC}$ = 3.3V ± 5%, $V_{EE}$ = 0V, $T_A$ = 0°C to 70°C

| Symbol | Parameter | Test Conditions | Minimum | Typical | Maximum | Units |
|---|---|---|---|---|---|---|
| $f_{OUT}$ | Output Frequency | | | 75 | | MHz |
| *t*jit(Ø) | RMS Phase Jitter (Random); NOTE 1 | 75MHz, Integration Range: 900kHz – 7.5MHz | | 0.734 | | ps |
| $t_R$ / $t_F$ | Output Rise/Fall Time | 20% to 80% | 325 | | 575 | ps |
| odc | Output Duty Cycle | | 48 | | 52 | % |

NOTE: Electrical parameters are guaranteed over the specified ambient operating temperature range, which is established when the device is mounted in a test socket with maintained transverse airflow greater than 500 lfpm. The device will meet specifications after thermal equilibrium has been reached under these conditions.
NOTE 1: Refer to the Phase Noise plot.

**Table 6B. AC Characteristics,** $V_{CC}$ = 2.5V ± 5%, $V_{EE}$ = 0V, $T_A$ = 0°C to 70°C

| Symbol | Parameter | Test Conditions | Minimum | Typical | Maximum | Units |
|---|---|---|---|---|---|---|
| $f_{OUT}$ | Output Frequency | | | 75 | | MHz |
| *t*jit(Ø) | RMS Phase Jitter (Random); NOTE 1 | 75MHz, Integration Range: 900kHz – 7.5MHz | | 0.755 | | ps |
| $t_R$ / $t_F$ | Output Rise/Fall Time | 20% to 80% | 325 | | 575 | ps |
| odc | Output Duty Cycle | | 48 | | 52 | % |

NOTE: Electrical parameters are guaranteed over the specified ambient operating temperature range, which is established when the device is mounted in a test socket with maintained transverse airflow greater than 500 lfpm. The device will meet specifications after thermal equilibrium has been reached under these conditions.
NOTE 1: Refer to the Phase Noise plot.

 ©2015 Integrated Device Technology, Inc.

## Typical Phase Noise at 75MHz at 3.3V

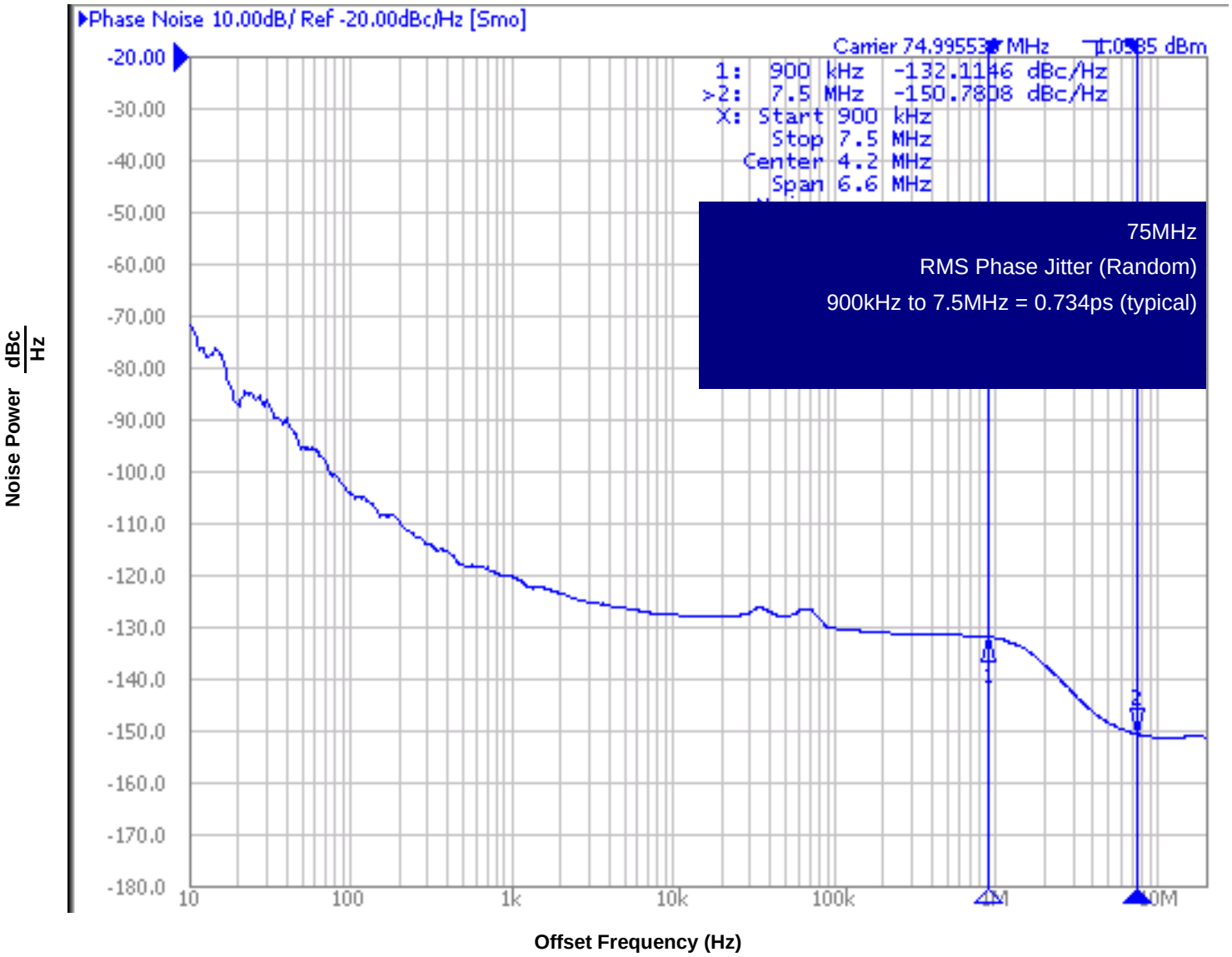


 ©2015 Integrated Device Technology, Inc.

## Typical Phase Noise at 75MHz at 2.5V

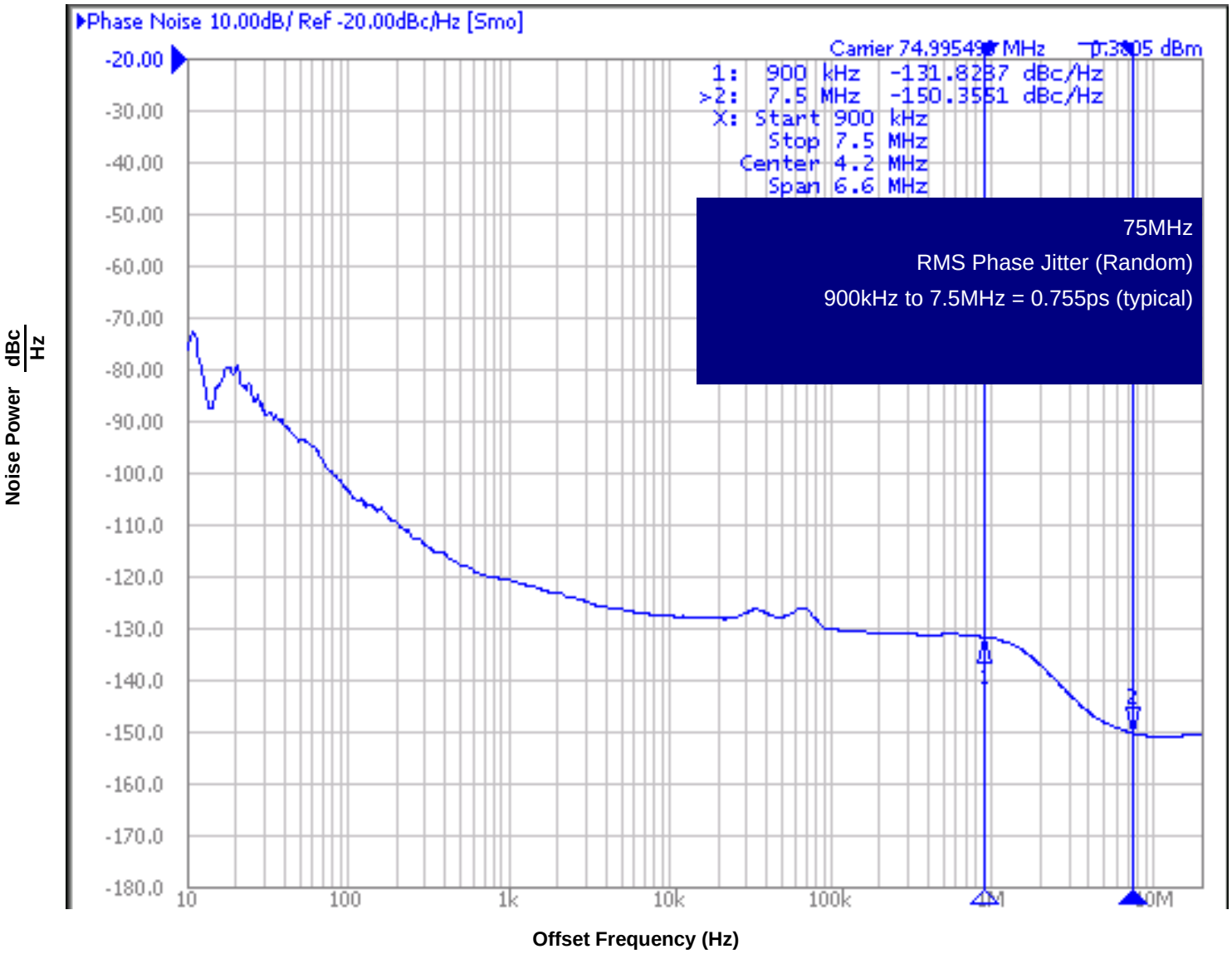


 ©2015 Integrated Device Technology, Inc.

# Parameter Measurement Information

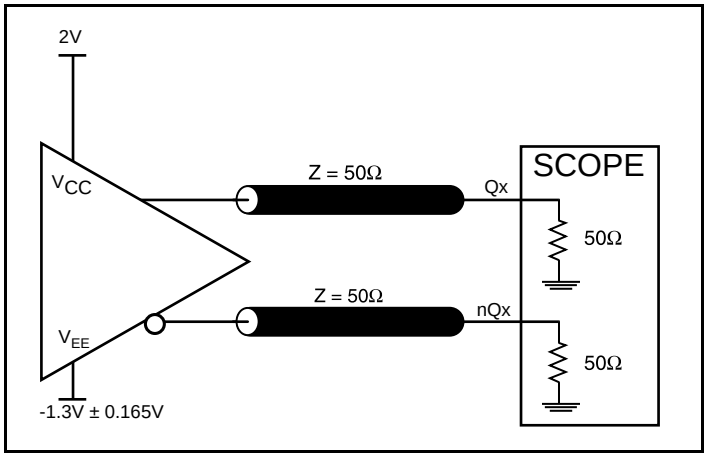


**3.3V LVPECL Output Load AC Test Circuit**

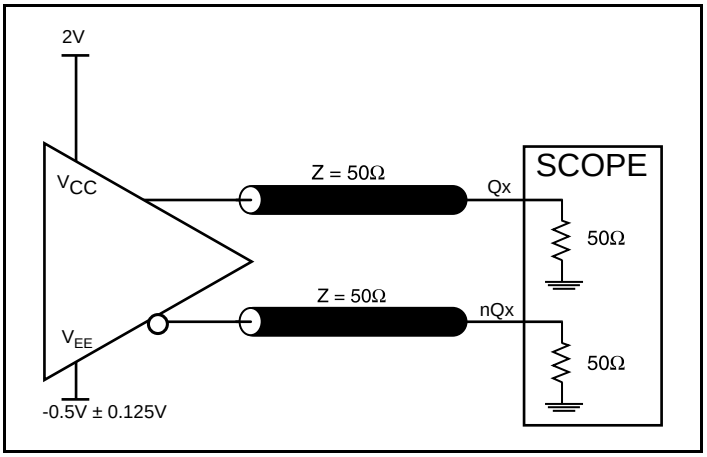


**2.5V LVPECL Output Load AC Test Circuit**

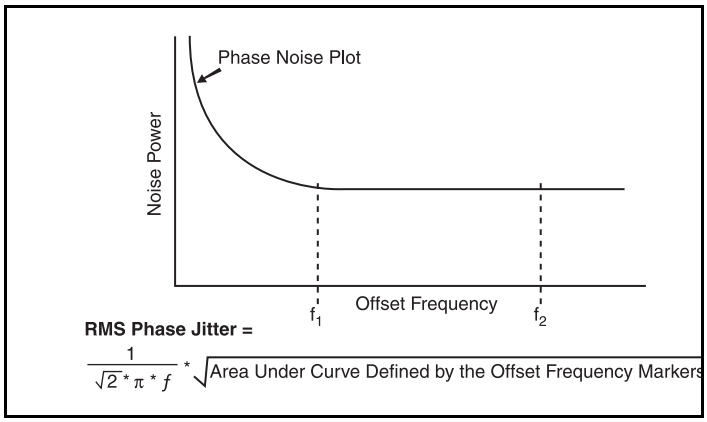


**RMS Phase Jitter**

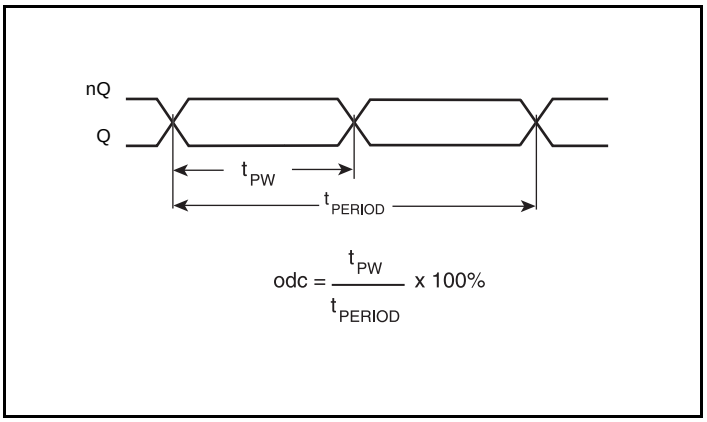


**Output Duty Cycle/Pulse Width/Period**

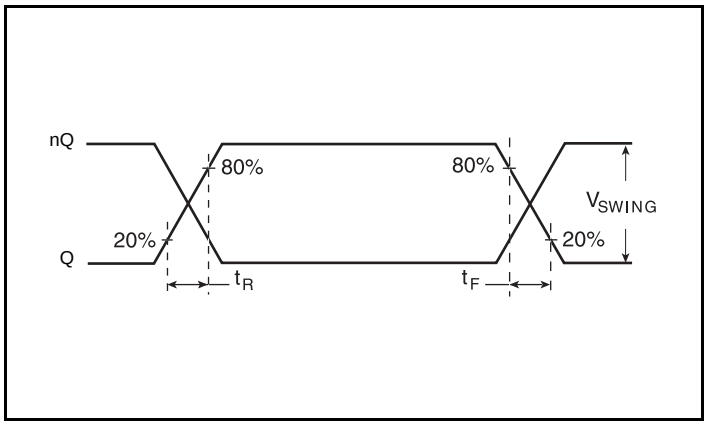


**Output Rise/Fall Time**

 ©2015 Integrated Device Technology, Inc.

# Application Information

## Crystal Input Interface

The 843751 has been characterized with 18pF parallel resonant crystals. The capacitor values, C1 and C2, shown in *Figure 1* below were determined using a 25MHz, 18pF parallel resonant crystal and were chosen to minimize the ppm error. The optimum C1 and C2 values can be slightly adjusted for different board layouts.

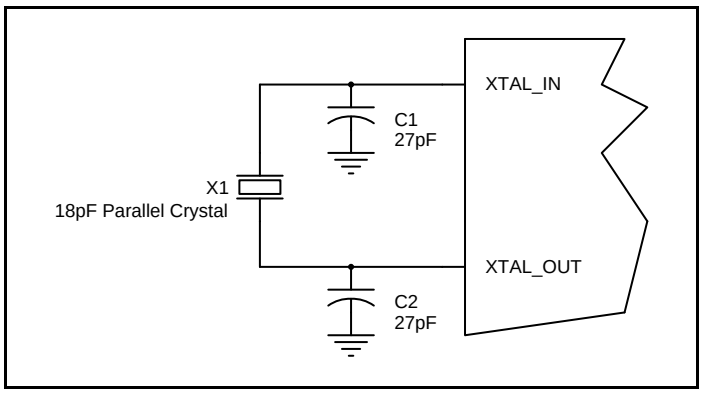


**Figure 1. Crystal Input Interface**

## LVCMOS to XTAL Interface

The XTAL_IN input can accept a single-ended LVCMOS signal through an AC coupling capacitor. A general interface diagram is shown in *Figure 2.* The XTAL_OUT pin can be left floating. The input edge rate can be as slow as 10ns. For LVCMOS signals, it is recommended that the amplitude be reduced from full swing to half swing in order to prevent signal interference with the power rail and to reduce noise. This configuration requires that the output impedance of the driver (Ro) plus the series resistance (Rs) equals the transmission line impedance. In addition, matched termination at the crystal input will attenuate the signal in half. This can be done in one of two ways. First, R1 and R2 in parallel should equal the transmission line impedance. For most 50Ω applications, R1 and R2 can be 100Ω. This can also be accomplished by removing R1 and making R2 50Ω. By overdriving the crystal oscillator, the device will be functional, but note, the device performance is guaranteed by using a quartz crystal.

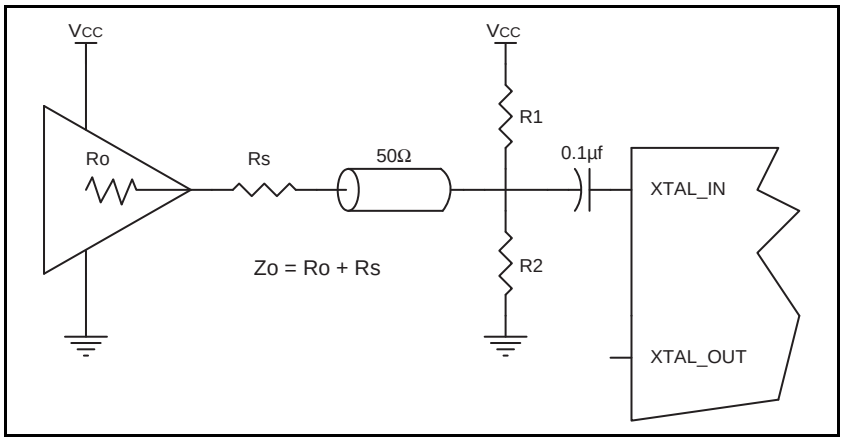


**Figure 2. General Diagram for LVCMOS Driver to XTAL Input Interface**

 ©2015 Integrated Device Technology, Inc.

## Termination for 3.3V LVPECL Outputs

The clock layout topology shown below is a typical termination for LVPECL outputs. The two different layouts mentioned are recommended only as guidelines.

The differential outputs are low impedance follower outputs that generate ECL/LVPECL compatible outputs. Therefore, terminating resistors (DC current path to ground) or current sources must be used for functionality. These outputs are designed to drive 50Ω transmission lines. Matched impedance techniques should be used to maximize operating frequency and minimize signal distortion. *Figures 3A and 3B* show two different layouts which are recommended only as guidelines. Other suitable clock layouts may exist and it would be recommended that the board designers simulate to guarantee compatibility across all printed circuit and clock component process variations.

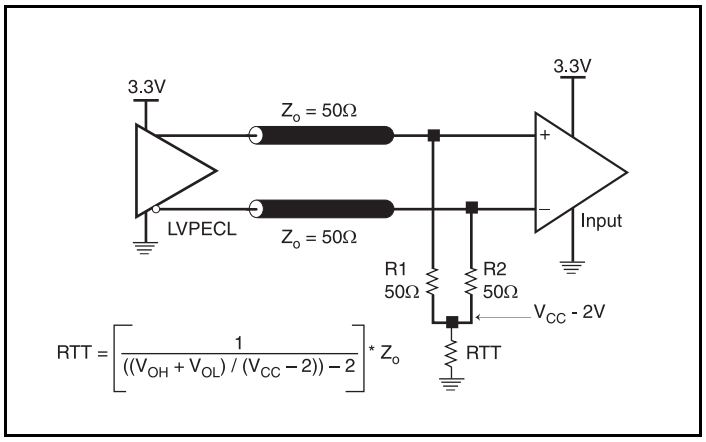


**Figure 3A. 3.3V LVPECL Output Termination**

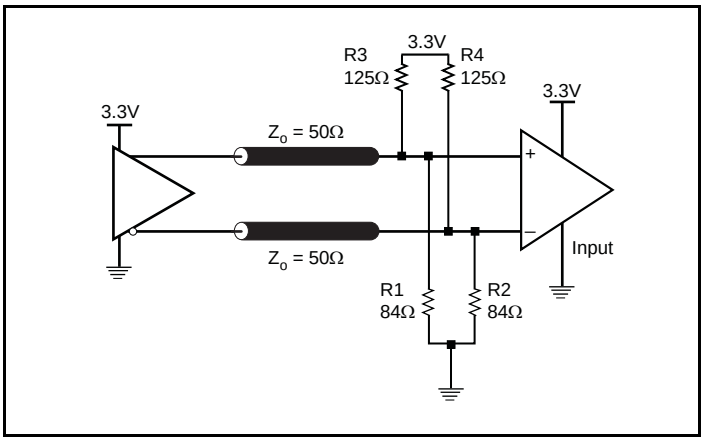


**Figure 3B. 3.3V LVPECL Output Termination**

 ©2015 Integrated Device Technology, Inc.

## Termination for 2.5V LVPECL Outputs

*Figure 4A* and *Figure 5B* show examples of termination for 2.5V LVPECL driver. These terminations are equivalent to terminating 50Ω to $V_{CC}$ – 2V. For $V_{CC}$= 2.5V, the $V_{CC}$– 2V is very close to ground level. The R3 in Figure 4B can be eliminated and the termination is shown in *Figure 4C.*

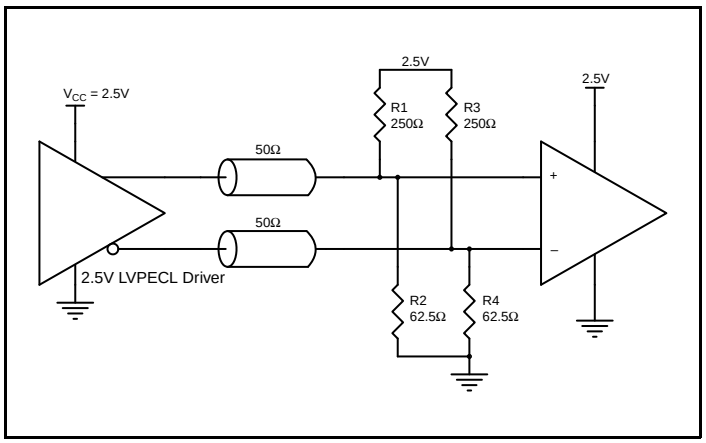


**Figure 4A. 2.5V LVPECL Driver Termination Example**

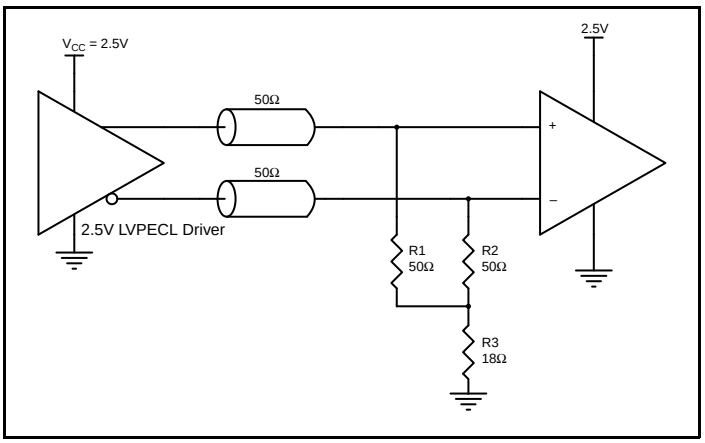


**Figure 4B. 2.5V LVPECL Driver Termination Example**

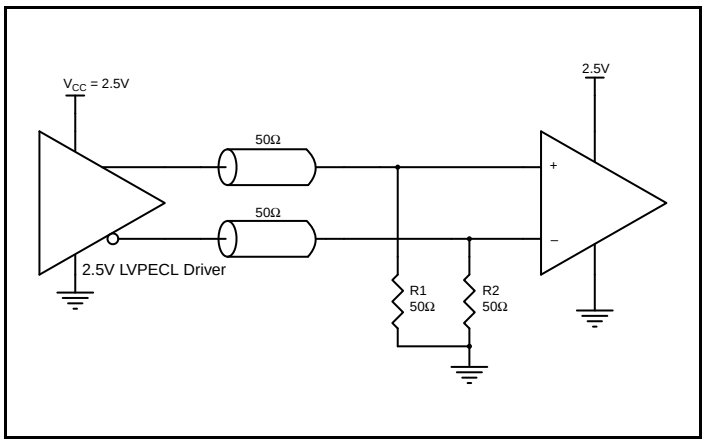


**Figure 4C. 2.5V LVPECL Driver Termination Example**

 ©2015 Integrated Device Technology, Inc.

# Power Considerations

This section provides information on power dissipation and junction temperature for the 843751.
Equations and example calculations are also provided.

### 1. Power Dissipation.

The total power dissipation for the 843751 is the sum of the core power plus the power dissipated in the load(s).
The following is the power dissipation for $V_{CC}$ = 3.3V + 5% = 3.465V, which gives worst case results.

NOTE: Please refer to Section 3 for details on calculating power dissipated in the load.

- Power $(core)_{MAX} = V_{CC_MAX} * I_{EE_MAX}$ = 3.465V * 77mA = **266.8mW**
- Power $(outputs)_{MAX}$ = **30mW/Loaded Output pair**

**Total Power**$_{_MAX}$ (3.465V, with all outputs switching) = 266.8mW + 30mW = **296.8mW**

### 2. Junction Temperature.

Junction temperature, Tj, is the temperature at the junction of the bond wire and bond pad directly affects the reliability of the device. The maximum recommended junction temperature is 125°C. Limiting the internal transistor junction temperature, Tj, to 125°C ensures that the bond wire and bond pad temperature remains below 125°C.

The equation for Tj is as follows: $Tj = \theta_{JA} * Pd_total + T_A$

Tj = Junction Temperature

$\theta_{JA}$ = Junction-to-Ambient Thermal Resistance

Pd_total = Total Device Power Dissipation (example calculation is in section 1 above)

$T_A$ = Ambient Temperature

In order to calculate junction temperature, the appropriate junction-to-ambient thermal resistance $\theta_{JA}$ must be used. Assuming no air flow and a multi-layer board, the appropriate value is 96°C/W per Table 7 below.

Therefore, Tj for an ambient temperature of 70°C with all outputs switching is:

70°C + 0.297W * 96°C/W = 98.5°C. This is well below the limit of 125°C.

This calculation is only an example. Tj will obviously vary depending on the number of loaded outputs, supply voltage, air flow and the type of board (multi-layer).

**Table 7. Thermal Resistance $\theta_{JA}$ for 24 Lead TSSOP, Forced Convection**

| $\theta_{JA}$ **vs. Air Flow** | | | |
|---|---|---|---|
| Linear Feet per Second | **0** | **200** | **500** |
| Multi-Layer PCB, JEDEC Standard Test Boards | 96°C/W | 87°C/W | 82°C/W |

 ©2015 Integrated Device Technology, Inc.

**3. Calculations and Equations.**

The purpose of this section is to calculate the power dissipation for the LVPECL output pairs.

LVPECL output driver circuit and termination are shown in *Figure 5.*

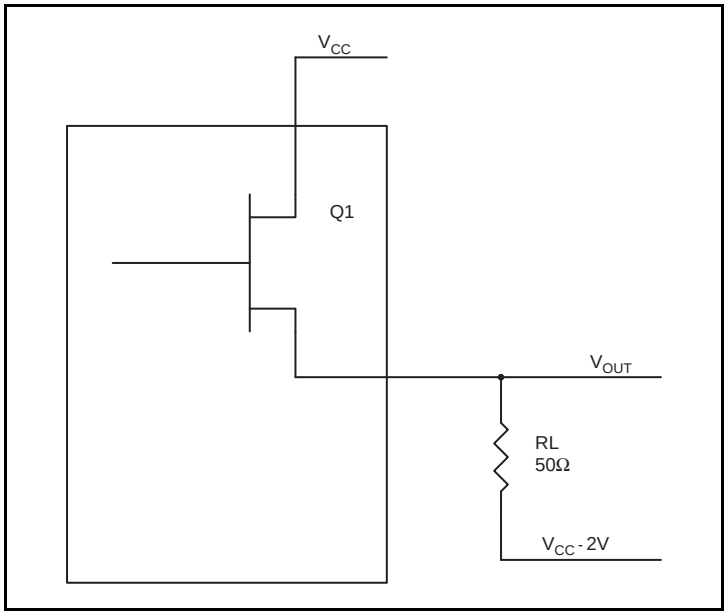


**Figure 5. LVPECL Driver Circuit and Termination**

To calculate worst case power dissipation into the load, use the following equations which assume a 50Ω load, and a termination voltage of $V_{CC}$ – 2V.

- For logic high, $V_{OUT} = V_{OH_MAX} = \mathbf{V_{CC_MAX} - 0.9V}$
  $(V_{CC_MAX} - V_{OH_MAX}) = \mathbf{0.9V}$
- For logic low, $V_{OUT} = V_{OL_MAX} = \mathbf{V_{CO_MAX} - 1.7V}$
  $(V_{CC_MAX} - V_{OL_MAX}) = \mathbf{1.7V}$

Pd_H is power dissipation when the output drives high.

Pd_L is the power dissipation when the output drives low.

$Pd_H = [(V_{OH_MAX} – (V_{CC_MAX} – 2V))/R_L] * (V_{CC_MAX} – V_{OH_MAX}) = [(2V – (V_{CC_MAX} – V_{OH_MAX}))/R_L] * (V_{CC_MAX} – V_{OH_MAX}) =$
$[(2V – 0.9V)/50\Omega] * 0.9V =$ **19.8mW**

$Pd_L = [(V_{OL_MAX} – (V_{CC_MAX} – 2V))/R_L] * (V_{CC_MAX} – V_{OL_MAX}) = [(2V – (V_{CC_MAX} – V_{OL_MAX}))/R_L] * (V_{CC_MAX} – V_{OL_MAX}) =$
$[(2V – 1.7V)/50\Omega] * 1.7V =$ **10.2mW**

Total Power Dissipation per output pair = Pd_H + Pd_L = **30mW**

 ©2015 Integrated Device Technology, Inc.

# Reliability Information

**Table 8. $\theta_{JA}$ vs. Air Flow Table for a 8 Lead SOIC**

| $\theta_{JA}$ vs. Air Flow | | | |
|---|---|---|---|
| Linear Feet per Second | **0** | **200** | **500** |
| Multi-Layer PCB, JEDEC Standard Test Boards | 96°C/W | 87°C/W | 82°C/W |

## Transistor Count

The transistor count for 843751 is: 2986

# Package Outline and Package Dimensions

**Package Outline - M Suffix for 8 Lead SOIC**

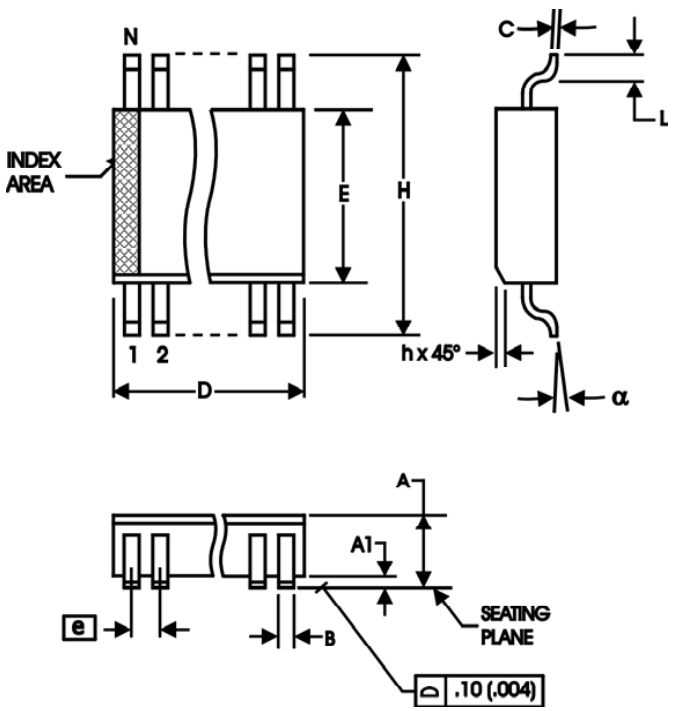


**Table 9. Package Dimensions for 8 Lead SOIC**

| All Dimensions in Millimeters | | |
|---|---|---|
| **Symbol** | **Minimum** | **Maximum** |
| **N** | 8 | |
| **A** | 1.35 | 1.75 |
| **A1** | 0.10 | 0.25 |
| **B** | 0.33 | 0.51 |
| **C** | 0.19 | 0.25 |
| **D** | 4.80 | 5.00 |
| **E** | 3.80 | 4.00 |
| **e** | 1.27 Basic | |
| **H** | 5.80 | 6.20 |
| **h** | 0.25 | 0.50 |
| **L** | 0.40 | 1.27 |
| α | 0° | 8° |

Reference Document: JEDEC Publication 95, MS-012

 ©2015 Integrated Device Technology, Inc.

# Ordering Information

**Table 10. Ordering Information**

| Part/Order Number | Marking | Package | Shipping Packaging | Temperature |
|---|---|---|---|---|
| 843751AMLF | 843751AL | Lead-Free, 8 Lead SOIC | Tube | 0°C to 70°C |
| 843751AMLFT | 843751AL | Lead-Free, 8 Lead SOIC | Tape & Reel | 0°C to 70°C |

NOTE: Parts that are ordered with an "LF" suffix to the part number are the Pb-Free configuration and are RoHS compliant.

 ©2015 Integrated Device Technology, Inc.

# Revision History Sheet

| Rev | Table | Page | Description of Change | Date |
|---|---|---|---|---|
| B | | 1 | PDN #CQ-15-04 Product Discontinuance Notice – Last Time buy Expires on August 14, 2016. | 08/21/15 |
| | | | | |
| | | | | |

 ©2015 Integrated Device Technology, Inc.




**Corporate Headquarters**
6024 Silver Creek Valley Road
San Jose, CA 95138 USA

**Sales**
1-800-345-7015 or 408-284-8200
Fax: 408-284-2775
www.IDT.com

**Tech Support**
email: clocks@idt.com

DISCLAIMER Integrated Device Technology, Inc. (IDT) and its subsidiaries reserve the right to modify the products and/or specifications described herein at any time and at IDT's sole discretion. All information in this document, including descriptions of product features and performance, is subject to change without notice. Performance specifications and the operating parameters of the described products are determined in the independent state and are not guaranteed to perform the same way when installed in customer products. The information contained herein is provided without representation or warranty of any kind, whether express or implied, including, but not limited to, the suitability of IDT's products for any particular purpose, an implied warranty of merchantability, or non-infringement of the intellectual property rights of others. This document is presented only as a guide and does not convey any license under intellectual property rights of IDT or any third parties.

IDT's products are not intended for use in applications involving extreme environmental conditions or in life support systems or similar devices where the failure or malfunction of an IDT product can be reasonably expected to significantly affect the health or safety of users. Anyone using an IDT product in such a manner does so at their own risk, absent an express, written agreement by IDT.

While the information presented herein has been checked for both accuracy and reliability, Integrated Device Technology (IDT) assumes no responsibility for either its use or for the infringement of any patents or other rights of third parties, which would result from its use. No other circuits, patents, or licenses are implied. This product is intended for use in normal commercial applications. Any other applications, such as those requiring extended temperature ranges, high reliability or other extraordinary environmental requirements are not recommended without additional processing by IDT. IDT reserves the right to change any circuitry or specifications without notice. IDT does not authorize or warrant any IDT product for use in life support devices or critical medical instruments.

Integrated Device Technology, IDT and the IDT logo are registered trademarks of IDT. Product specification subject to change without notice. Other trademarks and service marks used herein, including protected names, logos and designs, are the property of IDT or their respective third party owners.

Copyright ©2014 Integrated Device Technology, Inc.. All rights reserved.