General Description

The 83908I-02 is a low skew, high performance 1-to-8 Crystal Oscillator//Crystal-to-LVCMOS fanout buffer from IDT. The 83908I-02 has selectable single-ended clock or two crystal-oscillator inputs. There is an output enable to disable the outputs by placing them into a high-impedance state.

Guaranteed output and part-to-part skew characteristics make the 83908I-02 ideal for those applications demanding well defined performance and repeatability.

Features

- Eight LVCMOS/LVTTL outputs ,
  19Ω typical output impedance @ $V_{DD} = V_{DDO} = 3.3V$
- Two Crystal oscillator input pairs
  One LVCMOS/LVTTL clock input
- Crystal input frequency range: 10MHz - 40MHz
- Output frequency: 200MHz (typical)
- Output Skew: 70ps (maximum) @ $V_{DD} = V_{DDO} = 3.3V$
- Part-to-part skew: 700ps (maximum) @ $V_{DD} = V_{DDO} = 3.3V$
- RMS phase jitter @ 25MHz output using a 25MHz crystal (12kHz - 10MHz): 0.39ps (typical) @ $V_{DD} = V_{DDO} = 3.3V$

Offset	Noise Power
100Hz	-111.4 dBc/Hz
1kHz	-139.9 dBc/Hz
10kHz	-157.3 dBc/Hz
100kHz	-157.5 dBc/Hz

- Supply Voltage Modes:
  (Core/Output)
  3.3V/3.3V
  3.3V/2.5V
  3.3V/1.8V
  2.5V/2.5V
  2.5V/1.8V
- -40°C to 85°C ambient operating temperature
- Available in lead-free (RoHS 6) package

Block Diagram

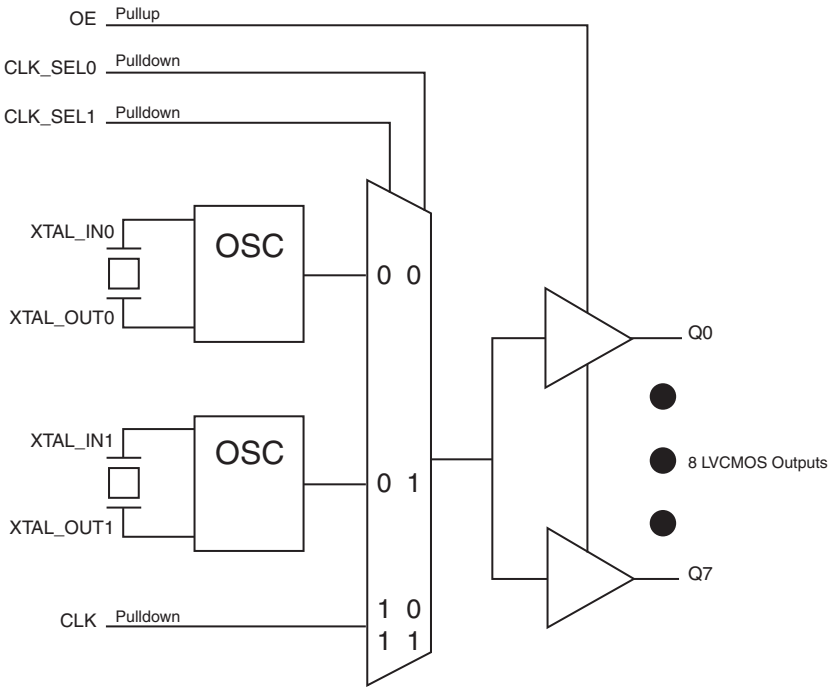

Pin Assignment

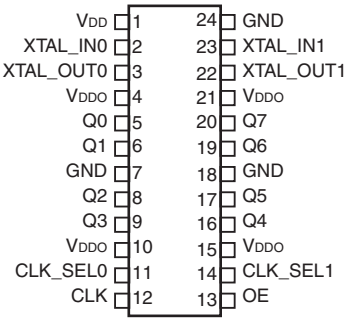

83908I-02
24-Lead, 173-MIL TSSOP
4.4mm x 7.8mm x 0.925mm
body package
G Package
Top View

Table 1. Pin Descriptions

Number	Name	Type		Description
1	V_{DD}	Power		Power supply pin.
2, 3	XTAL_IN0, XTAL_OUT0	Input		Crystal oscillator interface. XTAL_IN0 is the input. XTAL_OUT0 is the output.
4, 10, 15, 21	V_{DDO}	Power		Output supply pins.
5, 6, 8, 9, 16, 17, 19, 20	Q0, Q1, Q2, Q3, Q4, Q5, Q6, Q7	Output		Single-ended clock outputs. LVCMOS/LVTTL interface levels.
7, 18, 24	GND	Power		Power supply ground.
11, 14	CLK_SEL0, CLK_SEL1	Input	Pulldown	Clock select inputs. See Table 3, Input Reference Function Table. LVCMOS / LVTTL interface levels.
12	CLK	Input	Pulldown	Single-ended clock input. LVCMOS/LVTTL interface levels.
13	OE	Input	Pullup	Output enable. When LOW, outputs are in HIGH impedance state. When HIGH, outputs are active. LVCMOS / LVTTL interface levels.
22, 23	XTAL_OUT1, XTAL_IN1	Input		Crystal oscillator interface. XTAL_IN1 is the input. XTAL_OUT1 is the output.

NOTE: *Pullup* and *Pulldown* refer to internal input resistors. See Table 2, Pin Characteristics, for typical values.

Table 2. Pin Characteristics

Symbol	Parameter	Test Conditions	Minimum	Typical	Maximum	Units
C_{IN}	Input Capacitance			4		pF
R_{PULLUP}	Input Pullup Resistor			51		kΩ
$R_{PULLDOWN}$	Input Pulldown Resistor			51		kΩ
C_{PD}	Power Dissipation Capacitance (per output)	V_{DDO} = 3.465V		7		pF
		V_{DDO} = 2.625V		7		pF
		V_{DDO} = 2V		6		pF
R_{OUT}	Output Impedance	V_{DDO} = 3.3V ± 5%		19		Ω
		V_{DDO} = 2.5V ± 5%		21		Ω
		V_{DDO} = 1.8V ± 0.2V		32		Ω

Table 3. Input Reference Function Table

Control Inputs		Reference	
CLK_SEL1	CLK_SEL0		
0	0	XTAL0 enabled (default)	XTAL1 disabled
0	1	XTAL1 enabled	XTAL0 disabled
1	0	CLK enabled	XTAL0 and XTAL1 disabled
1	1	CLK enabled	XTAL0 and XTAL1 disabled

Absolute Maximum Ratings

Supply Voltage, V_{DD}	4.6V
Inputs, V_I	-0.5V to V_{DD} + 0.5 V
Outputs, V_O	-0.5V to V_{DDO} + 0.5V
Package Thermal Impedance, θ_{JA}	87.8°C/W (0 mps)
Storage Temperature, T_{STG}	-65°C to 150°C

NOTE: Stresses beyond those listed under Absolute Maximum Ratings may cause permanent damage to the device. These ratings are stress specifications only. Functional operation of product at these conditions or any conditions beyond those listed in the *DC Characteristics* or *AC Characteristics* is not implied. Exposure to absolute maximum rating conditions for extended periods may affect product reliability.

Table 4A. Power Supply DC Characteristics, $V_{DD} = V_{DDO} = 3.3V \pm 5\%$, T_A = -40°C to 85°C

Symbol	Parameter	Test Conditions	Minimum	Typical	Maximum	Units
V_{DD}	Core Supply Voltage		3.135	3.3	3.465	V
V_{DDO}	Output Supply Voltage		3.135	3.3	3.465	V
I_{DD}	Power Supply Current	No Load & XTALx selected			30	mA
		No Load & CLK selected			1	mA
I_{DDO}	Output Supply Current	No Load & CLK selected			1	mA

Table 4B. Power Supply DC Characteristics, $V_{DD} = 3.3V \pm 5\%$, $V_{DDO} = 2.5V \pm 5\%$, T_A = -40°C to 85°C

Symbol	Parameter	Test Conditions	Minimum	Typical	Maximum	Units
V_{DD}	Core Supply Voltage		3.135	3.3	3.465	V
V_{DDO}	Output Supply Voltage		2.375	2.5	2.625	V
I_{DD}	Power Supply Current	No Load & XTALx selected			30	mA
		No Load & CLK selected			1	mA
I_{DDO}	Output Supply Current	No Load & CLK selected			1	mA

Table 4C. Power Supply DC Characteristics, $V_{DD} = 3.3V \pm 5\%$, $V_{DDO} = 1.8V \pm 0.2V$, T_A = -40°C to 85°C

Symbol	Parameter	Test Conditions	Minimum	Typical	Maximum	Units
V_{DD}	Core Supply Voltage		3.135	3.3	3.465	V
V_{DDO}	Output Supply Voltage		1.6	1.8	2.0	V
I_{DD}	Power Supply Current	No Load & XTALx selected			30	mA
		No Load & CLK selected			1	mA
I_{DDO}	Output Supply Current	No Load & CLK selected			1	mA

TABLE 4D. POWER SUPPLY DC CHARACTERISTICS, $V_{DD} = V_{DDO} = 2.5V \pm 5\%$, T_A = -40°C TO 85°C

Symbol	Parameter	Test Conditions	Minimum	Typical	Maximum	Units
V_{DD}	Core Supply Voltage		2.375	2.5	2.625	V
V_{DDO}	Output Supply Voltage		2.375	2.5	2.625	V
I_{DD}	Power Supply Current	No Load & XTALx selected			20	mA
		No Load & CLK selected			1	mA
I_{DDO}	Output Supply Current	No Load & CLK selected			1	mA

TABLE 4E. POWER SUPPLY DC CHARACTERISTICS, $V_{DD} = 2.5V \pm 5\%$, $V_{DDO} = 1.8V \pm 0.2V$, T_A = -40°C TO 85°C

Symbol	Parameter	Test Conditions	Minimum	Typical	Maximum	Units
V_{DD}	Core Supply Voltage		2.375	2.5	2.625	V
V_{DDO}	Output Supply Voltage		1.6	1.8	2.0	V
I_{DD}	Power Supply Current	No Load & XTALx selected			20	mA
		No Load & CLK selected			1	mA
I_{DDO}	Output Supply Current	No Load & CLK selected			1	mA

TABLE 4F. DC CHARACTERISTICS, T_A = -40°C TO 85°C

Symbol	Parameter		Test Conditions	Minimum	Typical	Maximum	Units
V_{IH}	Input High Voltage		V_{DD} = 3.3V ± 5%	2.2		V_{DD} + 0.3	V
			V_{DD} = 2.5V ± 5%	1.6		V_{DD} + 0.3	V
V_{IL}	Input Low Voltage		V_{DD} = 3.3V ± 5%	-0.3		1.3	V
			V_{DD} = 2.5V ± 5%	-0.3		0.9	V
I_{IH}	Input High Current	CLK, CLK_ SEL[0:1]	V_{DD} = 3.3V or 2.5V ± 5%			150	µA
		OE	V_{DD} = 3.3V or 2.5V ± 5%			5	µA
I_{IL}	Input Low Current	CLK, CLK_ SEL[0:1]	V_{DD} = 3.3V or 2.5V ± 5%	-5			µA
		OE	V_{DD} = 3.3V or 2.5V ± 5%	-150			µA
V_{OH}	Output HighVoltage		V_{DDO} = 3.3V ± 5%; NOTE 1	2.6			V
			V_{DDO} = 2.5V ± 5%; NOTE 1	1.8			V
			V_{DDO} = 1.8V ± 0.2V; NOTE 1	1.2			V
V_{OL}	Output Low Voltage		V_{DDO} = 3.3V ± 5%; NOTE 1			0.6	V
			V_{DDO} = 2.5V ± 5%; NOTE 1			0.5	V
			V_{DDO} = 1.8V ± 0.2V; NOTE 1			0.4	V

NOTE 1: Outputs terminated with 50Ω to $V_{DDO}/2$. See Parameter Measurement section, “Load Test Circuit” diagrams.

TABLE 5. CRYSTAL CHARACTERISTICS

Parameter	Test Conditions	Minimum	Typical	Maximum	Units
Mode of Oscillation / cut		Fundamental			
Frequency		10		40	MHz
Equivalent Series Resistance (ESR)				50	Ω
Shunt Capacitance				7	pF
Drive Level				1	mW

TABLE 6A. AC CHARACTERISTICS, $V_{DD} = V_{DDO} = 3.3V \pm 5\%$, T_A = -40°C TO 85°C

Symbol	Parameter		Test Conditions	Minimum	Typical	Maximum	Units
f_{MAX}	Output Frequency	w/external XTAL		10		40	MHz
		w/external CLK				200	MHz
tp_{LH}	Propagation Delay, Low-to-High; NOTE 1			1.4	2.0	2.6	ns
*t*sk(o)	Output Skew; NOTE 2					70	ps
*t*sk(pp)	Part-to-Part Skew; NOTE 2, 3					700	ps
*t*jit(Ø)	RMS Phase Jitter, Random; NOTE 4		25MHz XTAL, (12kHz-10MHz)		0.39		ps
t_R / t_F	Output Rise/Fall Time		20% to 80%	200		800	ps
odc	Output Duty Cycle	w/external XTAL	$f \leq 38.88$MHz	45		55	%
		w/external CLK	$f \leq 133$MHz	47		53	%
t_{EN}	Output Enable Time; NOTE 5					10	ns
t_{DIS}	Output Disable Time; NOTE 5					10	ns

NOTE 1: Measured from $V_{DD}/2$ of the input to $V_{DDO}/2$ of the output.
NOTE 2: This parameter is defined in accordance with JEDEC Standard 65.
NOTE 3: Defined as skew between outputs on different devices operating a the same supply voltages and with equal load conditions. Using the same type of input on each device, the output is measured at $V_{DDO}/2$.
NOTE 4: Phase jitter is dependent on the input source used.
NOTE 5: These parameters are guaranteed by characterization. Not tested in production.

TABLE 6B. AC CHARACTERISTICS, $V_{DD} = 3.3V \pm 5\%$, $V_{DDO} = 2.5V \pm 5\%$, T_A = -40°C TO 85°C

Symbol	Parameter		Test Conditions	Minimum	Typical	Maximum	Units
f_{MAX}	Output Frequency	w/external XTAL		10		40	MHz
		w/external CLK				200	MHz
tp_{LH}	Propagation Delay, Low-to-High; NOTE 1			1.5	2.1	2.7	ns
*t*sk(o)	Output Skew; NOTE 2					70	ps
*t*sk(pp)	Part-to-Part Skew; NOTE 2, 3					700	ps
*t*jit(Ø)	RMS Phase Jitter, Random; NOTE 4		25MHz XTAL, (12kHz-10MHz)		0.42		ps
t_R / t_F	Output Rise/Fall Time		20% to 80%	200		800	ps
odc	Output Duty Cycle	w/external XTAL	$f \leq 38.88$MHz	45		55	%
		w/external CLK	$f \leq 133$MHz	47		53	%
t_{EN}	Output Enable Time; NOTE 5					10	ns
t_{DIS}	Output Disable Time; NOTE 5					10	ns

NOTE 1: Measured from $V_{DD}/2$ of the input to $V_{DDO}/2$ of the output.
NOTE 2: This parameter is defined in accordance with JEDEC Standard 65.
NOTE 3: Defined as skew between outputs on different devices operating a the same supply voltages and with equal load conditions. Using the same type of input on each device, the output is measured at $V_{DDO}/2$.
NOTE 4: Phase jitter is dependent on the input source used.
NOTE 5: These parameters are guaranteed by characterization. Not tested in production.

TABLE 6C. AC CHARACTERISTICS, V_{DD} = 3.3V ± 5%, V_{DDO} = 1.8V±0.2V, T_A = -40°C TO 85°C

Symbol	Parameter		Test Conditions	Minimum	Typical	Maximum	Units
f_{MAX}	Output Frequency	w/external XTAL		10		40	MHz
		w/external CLK				200	MHz
tp_{LH}	Propagation Delay, Low-to-High; NOTE 1			1.6	2.4	3.2	ns
*t*sk(o)	Output Skew; NOTE 2					70	ps
*t*sk(pp)	Part-to-Part Skew; NOTE 2, 3					700	ps
*t*jit(Ø)	RMS Phase Jitter, Random; NOTE 4		25MHz XTAL, (12kHz-10MHz)		0.43		ps
t_R / t_F	Output Rise/Fall Time		20% to 80%	200		800	ps
odc	Output Duty Cycle	w/external XTAL	$f \leq$ 38.88MHz	45		55	%
		w/external CLK	$f \leq$ 133MHz	47		53	%
t_{EN}	Output Enable Time; NOTE 5					10	ns
t_{DIS}	Output Disable Time; NOTE 5					10	ns

NOTE 1: Measured from V_{DD}/2 of the input to V_{DDO}/2 of the output.
NOTE 2: This parameter is defined in accordance with JEDEC Standard 65.
NOTE 3: Defined as skew between outputs on different devices operating a the same supply voltages and with equal load conditions. Using the same type of input on each device, the output is measured at V_{DDO}/2.
NOTE 4: Phase jitter is dependent on the input source used.
NOTE 5: These parameters are guaranteed by characterization. Not tested in production.

TABLE 6D. AC CHARACTERISTICS, V_{DD} = V_{DDO} = 2.5V ± 5%, T_A = -40°C TO 85°C

Symbol	Parameter		Test Conditions	Minimum	Typical	Maximum	Units
f_{MAX}	Output Frequency	w/external XTAL		10		40	MHz
		w/external CLK				200	MHz
tp_{LH}	Propagation Delay, Low-to-High; NOTE 1			1.7	2.4	3.1	ns
*t*sk(o)	Output Skew; NOTE 2					70	ps
*t*sk(pp)	Part-to-Part Skew; NOTE 2, 3					700	ps
*t*jit(Ø)	RMS Phase Jitter, Random; NOTE 4		25MHz XTAL, (12kHz-10MHz)		0.44		ps
t_R / t_F	Output Rise/Fall Time		20% to 80%	200		800	ps
odc	Output Duty Cycle	w/external XTAL	$f \leq$ 38.88MHz	45		55	%
		w/external CLK	$f \leq$ 133MHz	47		53	%
t_{EN}	Output Enable Time; NOTE 5					10	ns
t_{DIS}	Output Disable Time; NOTE 5					10	ns

NOTE 1: Measured from V_{DD}/2 of the input to V_{DDO}/2 of the output.
NOTE 2: This parameter is defined in accordance with JEDEC Standard 65.
NOTE 3: Defined as skew between outputs on different devices operating a the same supply voltages and with equal load conditions. Using the same type of input on each device, the output is measured at V_{DDO}/2.
NOTE 4: Phase jitter is dependent on the input source used.
NOTE 5: These parameters are guaranteed by characterization. Not tested in production.

TABLE 6E. AC CHARACTERISTICS, V_{DD} = 2.5V ± 5%, V_{DDO} = 1.8V±0.2V, T_A = -40°C TO 85°C

Symbol	Parameter		Test Conditions	Minimum	Typical	Maximum	Units
f_{MAX}	Output Frequency	w/external XTAL		10		40	MHz
		w/external CLK				200	MHz
tp_{LH}	Propagation Delay, Low-to-High; NOTE 1			1.7	2.6	3.5	ns
*t*sk(o)	Output Skew; NOTE 2					70	ps
*t*sk(pp)	Part-to-Part Skew; NOTE 2, 3					700	ps
*t*jit(Ø)	RMS Phase Jitter, Random; NOTE 4		25MHz XTAL, (12kHz-10MHz)		0.37		ps
t_R / t_F	Output Rise/Fall Time		20% to 80%	200		800	ps
odc	Output Duty Cycle	w/external XTAL	$f \leq$ 38.88MHz	45		55	%
		w/external CLK	$f \leq$ 133MHz	47		53	%
t_{EN}	Output Enable Time; NOTE 5					10	ns
t_{DIS}	Output Disable Time; NOTE 5					10	ns

NOTE 1: Measured from V_{DD}/2 of the input to V_{DDO}/2 of the output.
NOTE 2: This parameter is defined in accordance with JEDEC Standard 65.
NOTE 3: Defined as skew between outputs on different devices operating a the same supply voltages and with equal load conditions. Using the same type of input on each device, the output is measured at V_{DDO}/2.
NOTE 4: Phase jitter is dependent on the input source used.
NOTE 5: These parameters are guaranteed by characterization. Not tested in production.

Typical Phase Noise at 25MHz @ 3.3V/3.3V

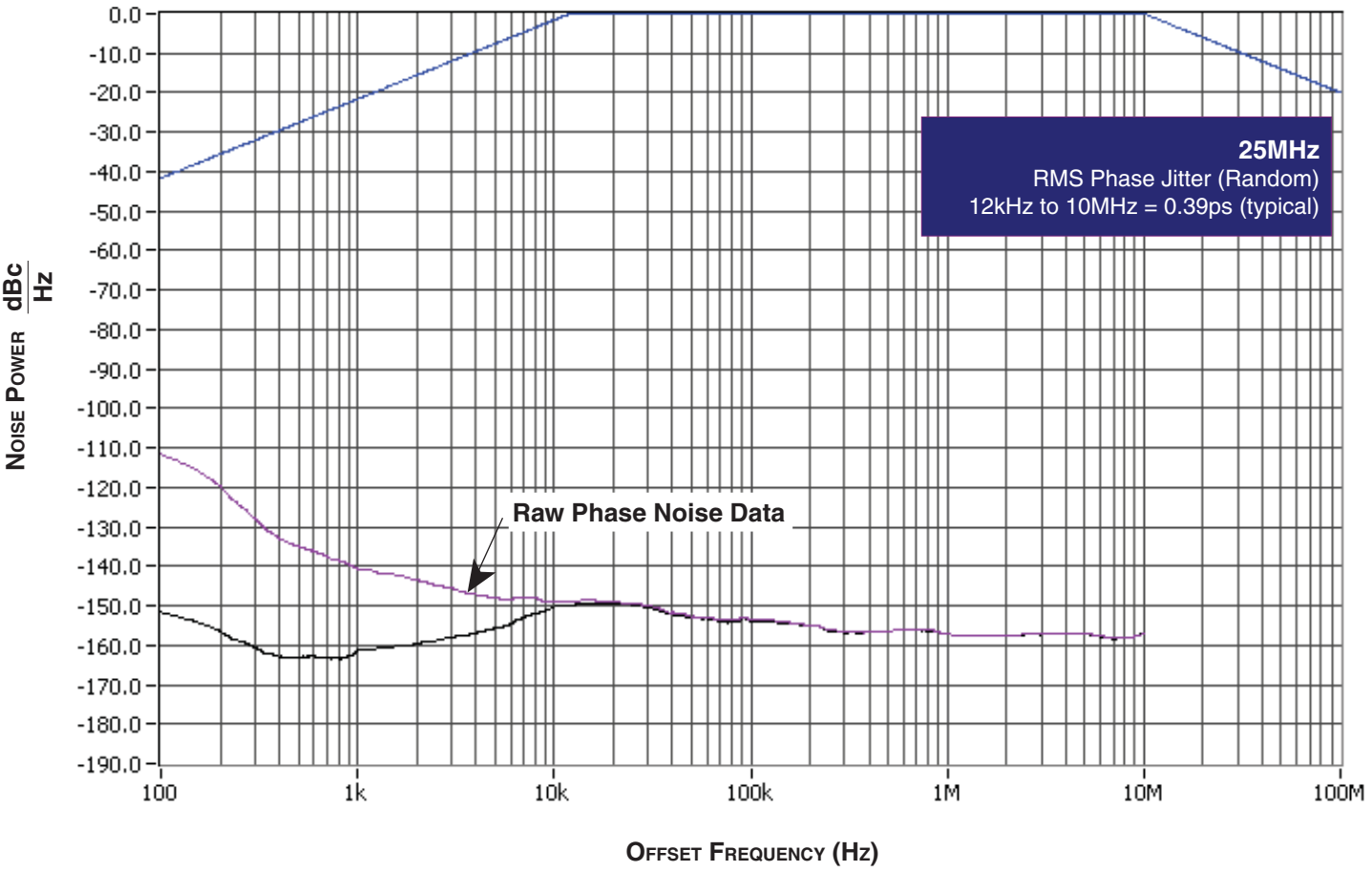

Parameter Measurement Information

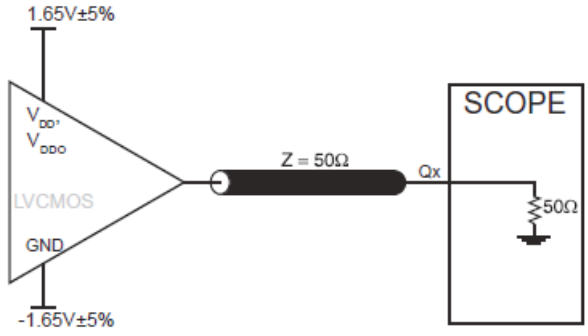

3.3V Core/3.3V Output Load AC Test Circuit

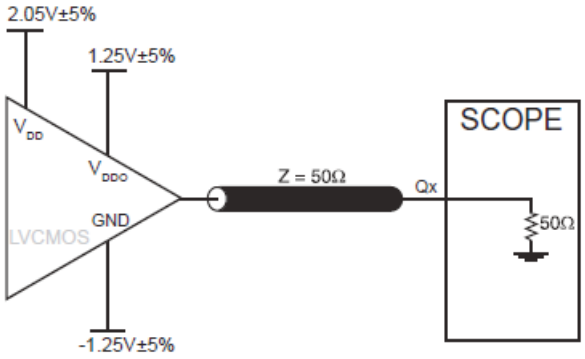

3.3V Core/2.5V Output Load AC Test Circuit

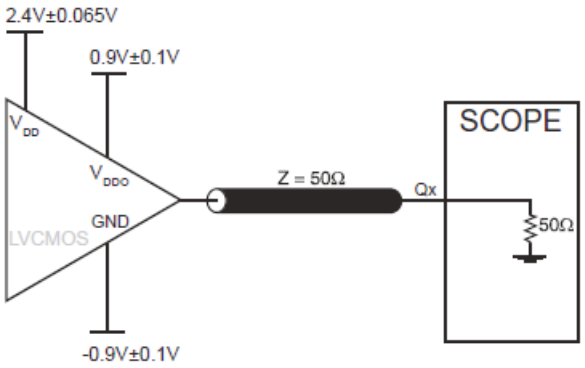

3.3V Core/1.8V Output Load AC Test Circuit

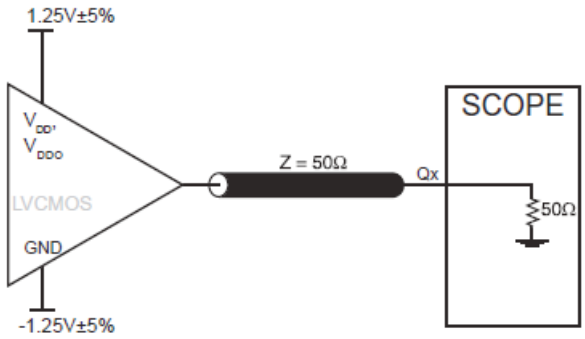

2.5V Core/2.5V Output Load AC Test Circuit

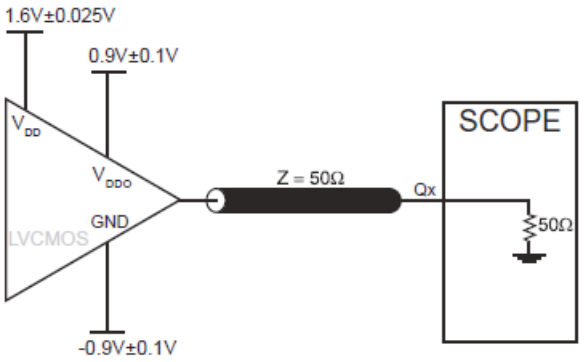

2.5V Core/1.8V Output Load AC Test Circuit

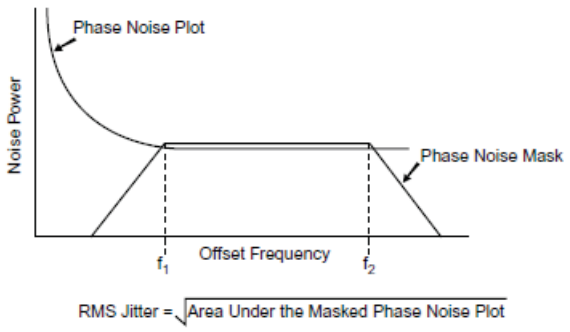

RMS Phase Jitter

Parameter Measurement Information, continued

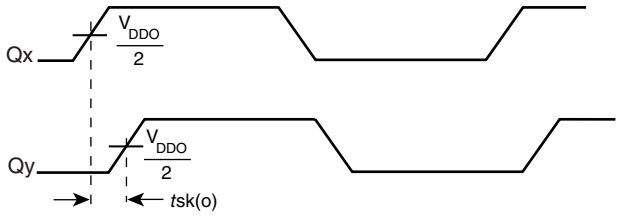

Output Skew



Part-to-Part Skew

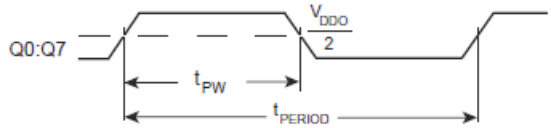

$$odc = \frac{t_{PW}}{t_{PERIOD}} \times 100\%$$

Output Duty Cycle/Pulse Width/Period

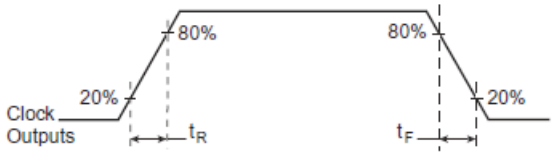

Output Rise/Fall Time

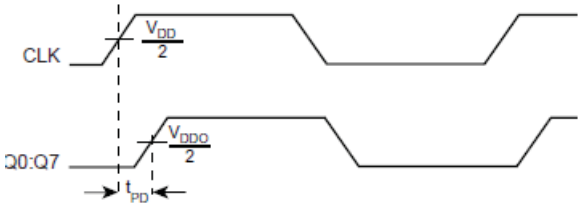

Propagation Delay

Application Information

Crystal Input Interface

Figure 1 shows an example of 83908I-02 crystal interface with a parallel resonant crystal. The frequency accuracy can be fine tuned by adjusting the C1 and C2 values. For a parallel crystal with loading capacitance CL = 18pF, we suggest C1 and C2 = 15pF to start with. These values may be slightly fine tuned further to optimize the frequency accuracy for different board layouts. Slightly increasing the C1 and C2 values will slightly reduce the frequency. Slightly decreasing the C1 and C2 values will slightly increase the frequency. For the oscillator circuit below, R1 can be used, but is not required. For new designs, it is recommended that R1 not be used.

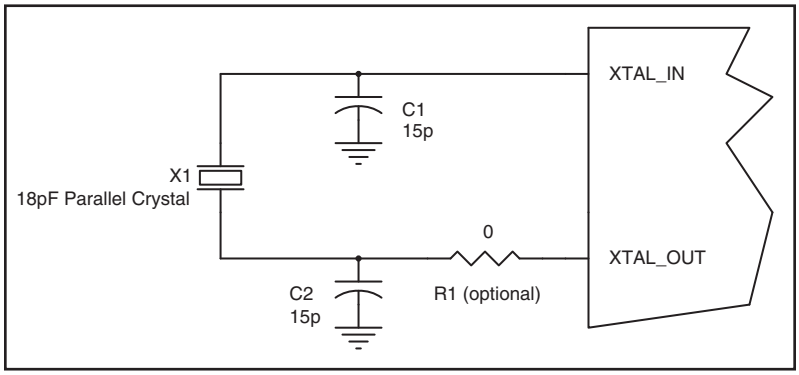

Figure 1. Crystal Input Interface

LVCMOS to XTAL Interface

The XTAL_IN input can accept a single-ended LVCMOS signal through an AC coupling capacitor. A general interface diagram is shown in *Figure 2.* The XTAL_OUT pin can be left floating. The input edge rate can be as slow as 10ns. For LVCMOS inputs, it is recommended that the amplitude be reduced from full swing to half swing in order to prevent signal interference with the power rail and to reduce noise. This configuration requires that the output impedance of the driver (Ro) plus the series resistance (Rs) equals the transmission line impedance. In addition, matched termination at the crystal input will attenuate the signal in half. This can be done in one of two ways. First, R1 and R2 in parallel should equal the transmission line impedance. For most 50Ω applications, R1 and R2 can be 100Ω. This can also be accomplished by removing R1 and making R2 50Ω.

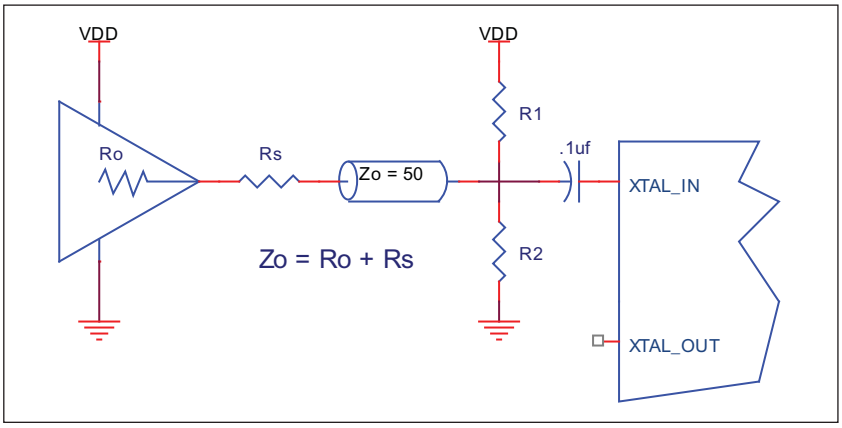

Figure 2. General Diagram for LVCMOS Driver to XTAL Input Interface

Recommendations for Unused Input and Output Pins

Inputs:

CLK Input

For applications not requiring the use of the clock input, it can be left floating. Though not required, but for additional protection, a 1kΩ resistor can be tied from the CLK input to ground.

Crystal Inputs

For applications not requiring the use of the crystal oscillator input, both XTAL_IN and XTAL_OUT should be tied to ground. Though not required, but for additional protection, a 1kΩ resistor can be tied from XTAL_IN to ground and from XTAL_OUT to ground.

LVCMOS Control Pins

All control pins have internal pull-ups or pull-downs; additional resistance is not required but can be added for additional protection. A 1kΩ resistor can be used.

Outputs:

LVCMOS Outputs

All unused LVCMOS output can be left floating. There should be no trace attached.

Reliability Information

Table 7. θ_{JA} vs. Air Flow Table for 24 Lead TSSOP

θ_{JA} by Velocity (Meters per Second)			
	0	**1**	**2.5**
Multi-Layer PCB, JEDEC Standard Test Boards	87.8°C/W	83.5°C/W	81.3°C/W

Transistor Count

The transistor count for 83908I-02 is: 277

Package Outline and Dimensions

Package Outline - G Suffix for 24 Lead TSSOP

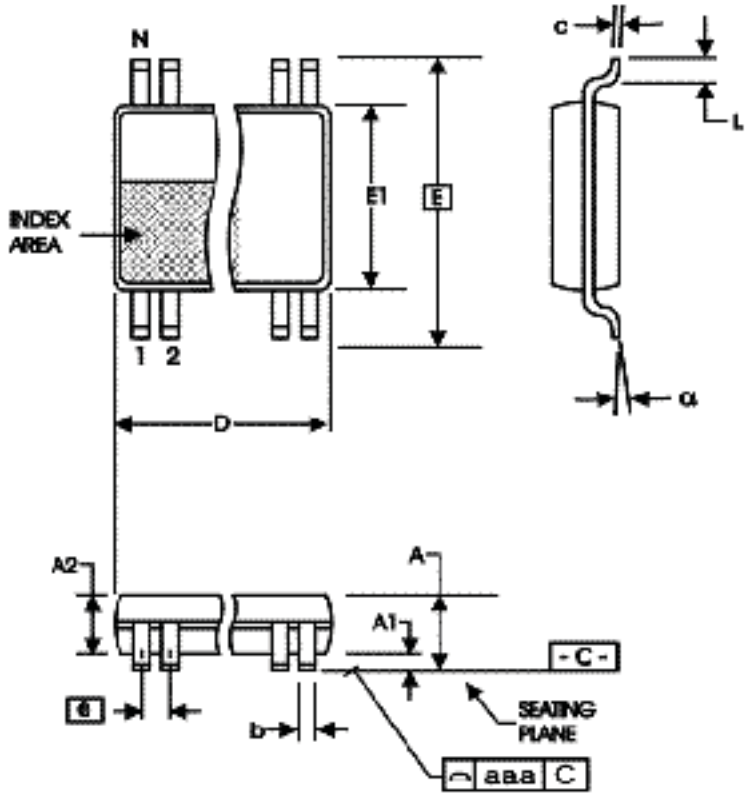

Table 8. Package Dimensions

SYMBOL	Millimeters	
	Minimum	**Maximum**
N	24	
A	--	1.20
A1	0.05	0.15
A2	0.80	1.05
b	0.19	0.30
c	0.09	0.20
D	7.70	7.90
E	6.40 BASIC	
E1	4.30	4.50
e	0.65 BASIC	
L	0.45	0.75
α	0°	8°
aaa	--	0.10

Reference Document: JEDEC Publication 95, MO-153

Table 9. Ordering Information

Part/Order Number	Marking	Package	Shipping Packaging	Temperature
83908AGI-02LF	ICS83908AI02L	24 lead “Lead Free” TSSOP	Tube	-40°C to +85°C
83908AGI-02LFT	ICS83908AI02L	24 lead “Lead Free” TSSOP	Tape and Reel	-40°C to +85°C

Revision History Sheet

Rev	Table	Page	Description of Change	Date
A	T9	14	Ordering Information - removed leaded devices. Updated datasheet format.	3/27/15
A	T9	14	Ordering Information - Deleted LF note below table. Updated header and footer	3/17/16

Corporate Headquarters
6024 Silver Creek Valley Road
San Jose, CA 95138 USA
www.IDT.com

Sales
1-800-345-7015 or 408-284-8200
Fax: 408-284-2775
www.IDT.com/go/sales

Tech Support
www.idt.com/go/support

DISCLAIMER Integrated Device Technology, Inc. (IDT) reserves the right to modify the products and/or specifications described herein at any time, without notice, at IDT's sole discretion. Performance specifications and operating parameters of the described products are determined in an independent state and are not guaranteed to perform the same way when installed in customer products. The information contained herein is provided without representation or warranty of any kind, whether express or implied, including, but not limited to, the suitability of IDT's products for any particular purpose, an implied warranty of merchantability, or non-infringement of the intellectual property rights of others. This document is presented only as a guide and does not convey any license under intellectual property rights of IDT or any third parties.

IDT's products are not intended for use in applications involving extreme environmental conditions or in life support systems or similar devices where the failure or malfunction of an IDT product can be reasonably expected to significantly affect the health or safety of users. Anyone using an IDT product in such a manner does so at their own risk, absent an express, written agreement by IDT.

Integrated Device Technology, IDT and the IDT logo are trademarks or registered trademarks of IDT and its subsidiaries in the United States and other countries. Other trademarks used herein are the property of IDT or their respective third party owners.

For datasheet type definitions and a glossary of common terms, visit www.idt.com/go/glossary.

Copyright ©2016 Integrated Device Technology, Inc. All rights reserved.