High Temperature Box Header

Series 8383

Series 8383 box headers are designed to be suitable for applications using either infra red or vapor phase equipment. These connectors are designed to mate with Series 8290 IDC sockets as well as other industry compatible connectors.

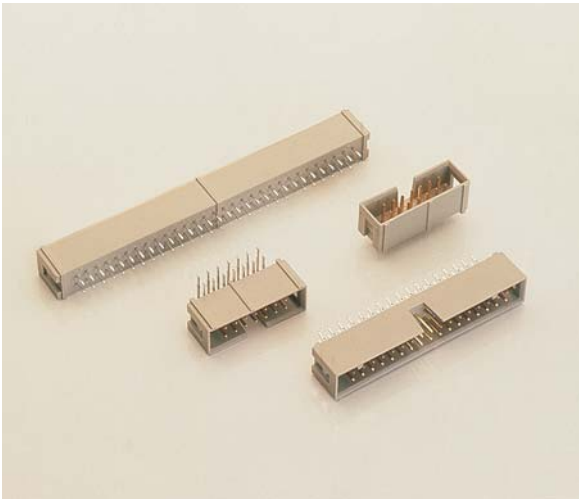

TECHNICAL SPECIFICATION

Termination Type:
Plated Through Hole

Termination Pitch:
0.100" (2.54mm)

Material:
Housing - UL94VO rated high thermal resistant nylon

Contact - Brass

Contact Plating:
Gold over nickel

Contact Resistance:
Initially 10 milliohms maximum

Current Rating:
1 ampere at 70ºC maximum ambient

Insulation Resistance:
>1000 megohms

Voltage Rating:
350V DC or AC peak

Heat Deflection Temperature:
285ºC

ORDERING CODE

00 — **Connector Code Prefix**
00 = Standard Connector Assembly

8383 — **Series Number**

050 — **Number of Contacts**
010 = 10 position
014 = 14 position
016 = 16 position
020 = 20 position
026 = 26 position
034 = 34 position
040 = 40 position
050 = 50 position
060 = 60 position
064 = 64 position

000 — **Contact Variation**
000 = Solder PC Straight (1.60mm PCB) Length 2.90mm
001 = Solder PC Right Angle (2.40mm PCB) Length 3.70mm
002 = Solder PC Right Angle (1.6mm PCB) Length 2.90mm
003 = Solder PC Straight (2.40mm PCB) Length 3.70mm
009 = Press Fit contact for 2.4/3.2mm PCB or contact length 4.5mm

0 — **Clip Variation**
0 = No Clip

1 — **Plating Variation**
1 = 30µ" Gold over Nickel
4 = 10µ" Gold over Nickel

0 — **Polarization**
0 = No Polarizing

High Temperature Box Header

Series 8383

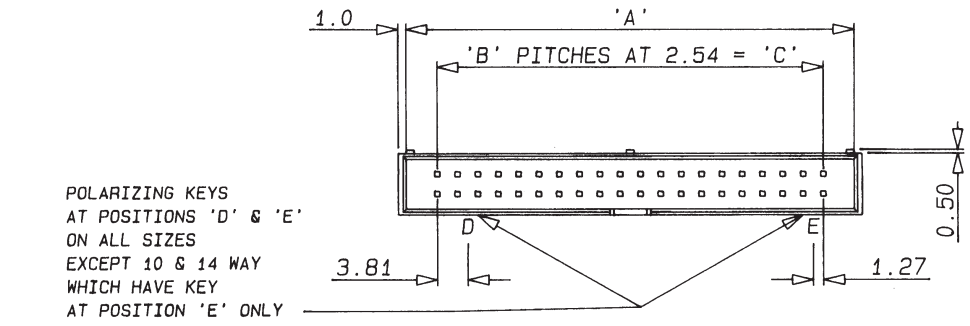

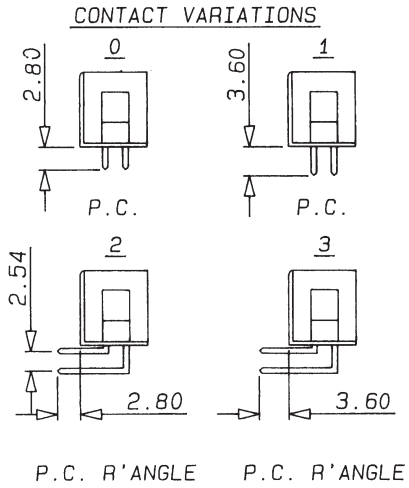

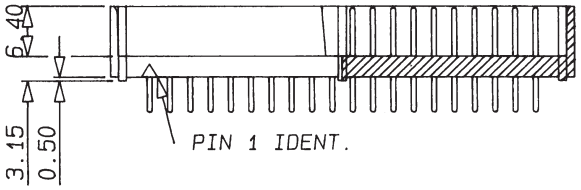

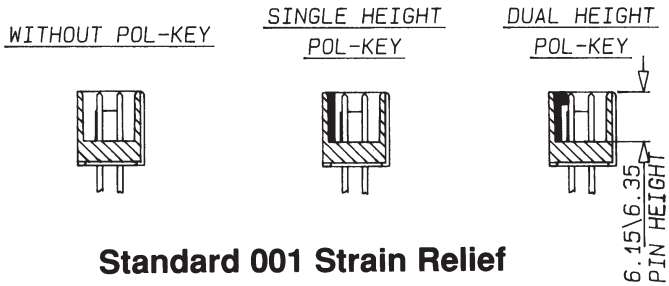

DIMENSIONS: millimeters (inches)

No. of Contacts	A	B	C
10	17.90 (0.705)	4	10.16 (0.40)
14	22.98 (0.905)	6	15.24 (0.60)
16	25.52 (1.00)	7	17.78 (0.70)
20	30.60 (1.20)	9	22.86 (0.90)
26	38.22 (1.50)	12	30.48 (1.20)
34	48.38 (1.90)	16	40.64 (1.60)
40	56.00 (2.20)	19	48.26 (1.90)
50	68.70 (2.70)	24	60.96 (2.40)
60	81.40 (3.20)	29	73.66 (2.90)
64	86.48 (3.20)	31	78.74 (3.10)

Standard 001 Strain Relief

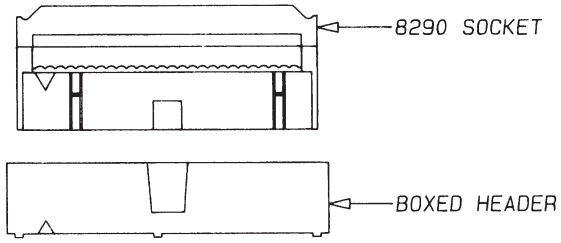

Latching 006 Strain Relief

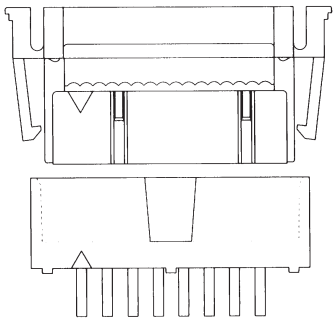

8383