This document was generated on 05/20/2010

PLEASE CHECK WWW.MOLEX.COM FOR LATEST PART INFORMATION

Part Number: 0834219042
Status: Active
Overview: commercial_microd
Description: Comercial Micro-D, CMD Single Ended, 9 Circuits, Female - Pigtail, 0.46m (1.50') Length

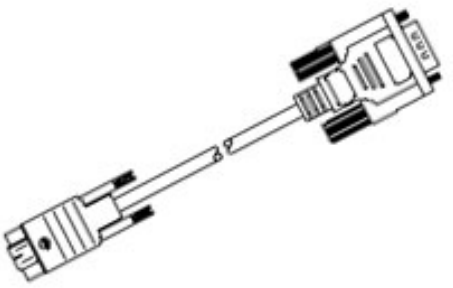

Series image - Reference only

Documents:
Drawing (PDF)
RoHS Certificate of Compliance (PDF)
Product Specification PS-83421-001 (PDF)

General

Product Family	Cable Assemblies
Series	83421
Connector to Connector	Commercial Micro-D-to-Pigtail
Overview	commercial_microd
Product Literature Order No	USA-063
Product Name	Commercial Micro-D

Physical

Cable Length	0.46m (1.50')
Circuits (Loaded)	9
Gender	Female-Pigtail
Lock to Mating Part	None
Material - Plating Mating	Gold
Material - Plating Termination	Tin
Packaging Type	Bag
Plating min: Mating (µin)	5
Plating min: Mating (µm)	0.125
Plating min: Termination (µin)	50
Plating min: Termination (µm)	1.25
Single Ended	Yes
Termination Interface: Style	Crimp or Compression
Wire Insulation Diameter	.225mm (5.720") max.
Wire Size AWG	28
Wire/Cable Type	N/A

Material Info

Reference - Drawing Numbers

Packaging Specification	PK-83422-001
Product Specification	PS-83421-001
Sales Drawing	SD-83421-9023

EU RoHS
ELV and RoHS Compliant
REACH SVHC
Not Reviewed
Halogen-Free Status
Not Reviewed

China RoHS

Need more information on product environmental compliance?

Email productcompliance@molex.com
For a multiple part number RoHS Certificate of Compliance, click here

Please visit the Contact Us section for any non-product compliance questions.

Search Parts in this Series
83421Series

This document was generated on 05/20/2010

PLEASE CHECK WWW.MOLEX.COM FOR LATEST PART INFORMATION

PART NUMBER	A (inch)	LENGTH TOL.
834219023	4.5"	+.5 -0
834219042	18.5"	+.5 -0
834219043	36.5"	+.75 -0
834219044	72.5"	+1.50 -0
834219060	300.0"	+6.25 -0

(E)

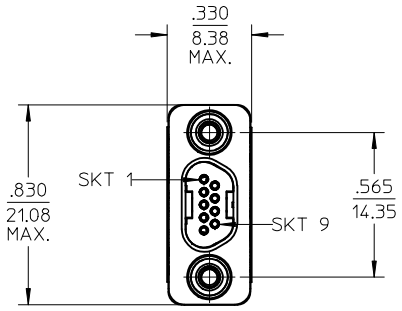

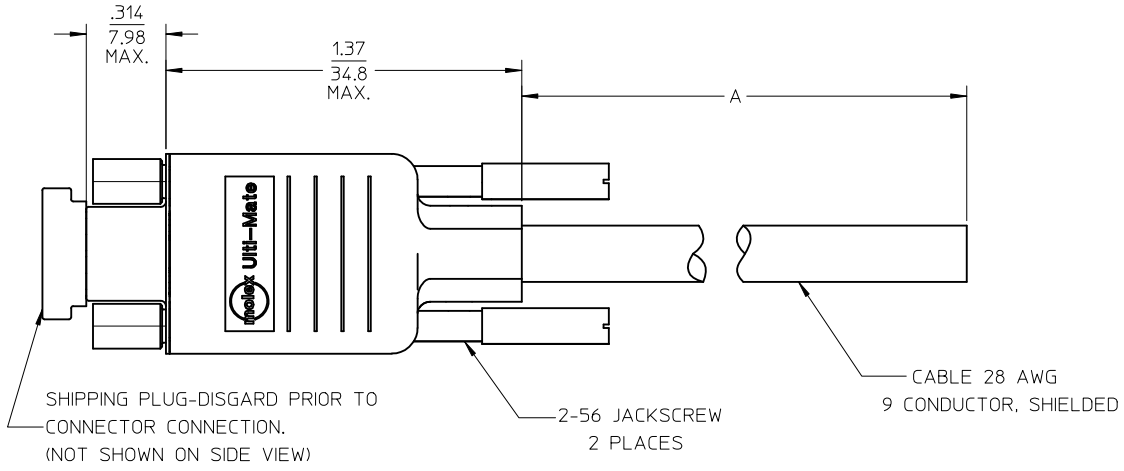

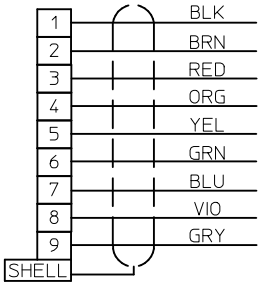

NOTES:

1) OVERMOLD ASSEMBLY
2) RoHS COMPLIANT

ADD PART NUM.
EC NO: WNA2010-0391 2010/01/29
DRWN:BRUPERT 2010/03/29
CH'KD:BRUPERT 2010/03/29
APPR: JFMURPHY 2010/03/29
DESCRIPTION
E
REV

QUALITY SYMBOLS
▼=0
Ⓒ=0

GENERAL TOLERANCES (UNLESS SPECIFIED)	mm	INCH
4 PLACES	± ---	± ---
3 PLACES	± ---	± .005
2 PLACES	± ---	± .01
1 PLACE	± ---	± ---
ANGULAR ± 2 °		

DRAFT WHERE APPLICABLE MUST REMAIN WITHIN DIMENSIONS

DIMENSION STYLE: IN/MM
SCALE: 2:1
DESIGN UNITS: INCH
THIRD ANGLE PROJECTION

DRAWN BY: D.URBACH DATE: 2AUG99
CHECKED BY: F.VAN WYK DATE:
APPROVED BY: JFMURPHY DATE: 2010/03/29
MATERIAL NO.: SEE CHART

TITLE: CMD CONNECTOR ASSEMBLY 9 CIRCUIT

MOLEX INCORPORATED

DOCUMENT NO.: SD-83421-9023
SHEET NO.: 1 OF 1
SIZE: A3

THIS DRAWING CONTAINS INFORMATION THAT IS PROPRIETARY TO MOLEX INCORPORATED AND SHOULD NOT BE USED WITHOUT WRITTEN PERMISSION