Aluminum Capacitors
+ 85 °C, Snap-In, General Purpose

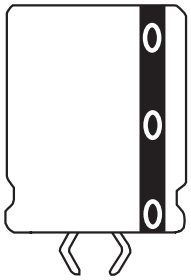

Fig.1 Component Outlines

FEATURES

- Economical
- General purpose design
- Wide voltage range

Pb-free Available

QUICK REFERENCE DATA	
DESCRIPTION	**VALUE**
Nominal case size ØD x L in mm	0.87" x 1.00" (22.0 x 25.0) to 1.38" x 3.15" (35.0 x 80.0)
Operating temperature	- 40 °C to + 85 °C
Rated capacitance range, C_R	39 µF to 180 000 µF
Tolerance on C_R	± 20 %
Rated voltage range, U_R	6.3 WVDC to 450 WVDC
Termination	Snap in
Life validation test at 85 °C	2000 hours: Δ CAP ≤ 15 % from initial measurement. Δ ESR ≤ 1.5 x initial specified limit. Δ DCL ≤ initial specified limit
Shelf life at 85 °C	500 hours: Δ CAP ≤ 15 % from initial measurement. Δ ESR ≤ 1.3 x initial specified limit. Δ DCL ≤ 2 x initial specified limit
DC leakage current	$I = K\sqrt{CV}$ K = 4.0 at + 25 °C I in µA, C in µF, V in Volts

RIPPLE CURRENT MULTIPLIERS				
TEMPERATURE				
AMBIENT TEMPERATURE		**MULTIPLIERS**		
+ 55 °C		2.0		
+ 65 °C		1.7		
+ 75 °C		1.4		
+ 85 °C		1.0		
FREQUENCY (Hz)				
WVDC		**50 TO 60**	**300 TO 1000**	**1000 AND UP**
16 - 49		0.85	1.10	1.15
50 - 199		0.83	1.15	1.20
200 - 400		0.80	1.30	1.40
ESL (TYPICAL VALUES AT 1 MHz TO 10 MHz)				
Nominal Diameter	0.87 (22.0)	0.98 (25.0)	1.18 (30.0)	1.38 (35.0)
Typical ESL (nH)	6.0	8.0	10.0	12.0

DIMENSIONS in inches (millimeters)

CASE CODE	DIAMETER	LENGTH	CASE CODE	DIAMETER	LENGTH
	D + 0.04 - 0 (+ 1.0 - 0)	L ± 0.08 (2.0)		D + 0.04 - 0 (+ 1.0 - 0)	L ± 0.08 (2.0)
HA	0.87 (22.0)	1.00 (25.0)	KC	1.18 (30.0)	1.38 (35.0)
HB	0.87 (22.0)	1.18 (30.0)	KD	1.18 (30.0)	1.57 (40.0)
HD	0.87 (22.0)	1.57 (40.0)	KE	1.18 (30.0)	2.00 (50.0)
JA	1.00 (25.0)	1.00 (25.0)	MB	1.38 (35.0)	1.18 (30.0)
JB	1.00 (25.0)	1.18 (30.0)	MC	1.38 (35.0)	1.38 (35.0)
JC	1.00 (25.0)	1.38 (35.0)	MD	1.38 (35.0)	1.57 (40.0)
JD	1.00 (25.0)	1.57 (40.0)	ME	1.38 (35.0)	2.00 (50.0)
JE	1.00 (25.0)	2.00 (50.0)	MF	1.38 (35.0)	2.50 (63.0)
KA	1.18 (30.0)	1.00 (25.0)	MG	1.38 (35.0)	3.18 (80.0)
KB	1.18 (30.0)	1.18 (30.0)			

DIMENSIONS in inches (millimeters)					
CIRCUIT BOARD MOUNT TERMINAL DIMENSIONS (1)					
DIAMETER		**STYLE A**			**STYLE B**
D	**CASE CODE**	**B**	**R**	**C**	**R**
1.00 (25.0)	J	0.093 (2.4)	0.301 (7.6)	140°	N/A
1.18 (30.0)	K	0.125 (3.2)	0.363 (9.2)	120°	0.391 (9.9)
1.38 (35.0)	M	0.125 (3.2)	0.458 (11.6)	120°	0.458 (11.6)

Note
(1) Style A and B not available in 0.87" (22.0mm) diameter units

DIMENSIONS AND AVAILABLE FORMS

Style A

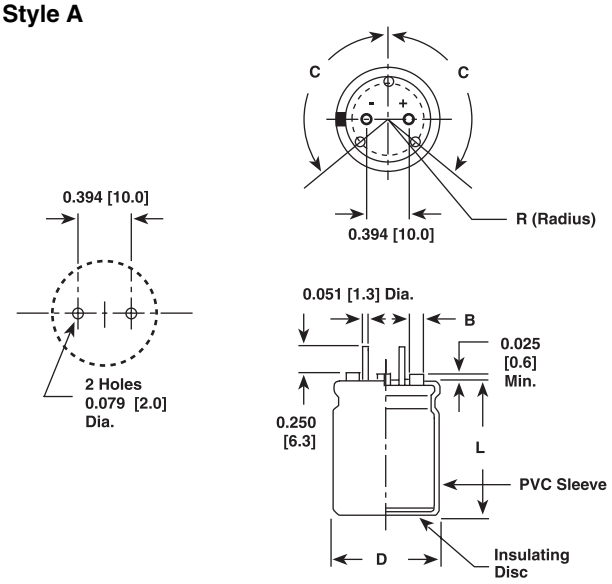

Style B

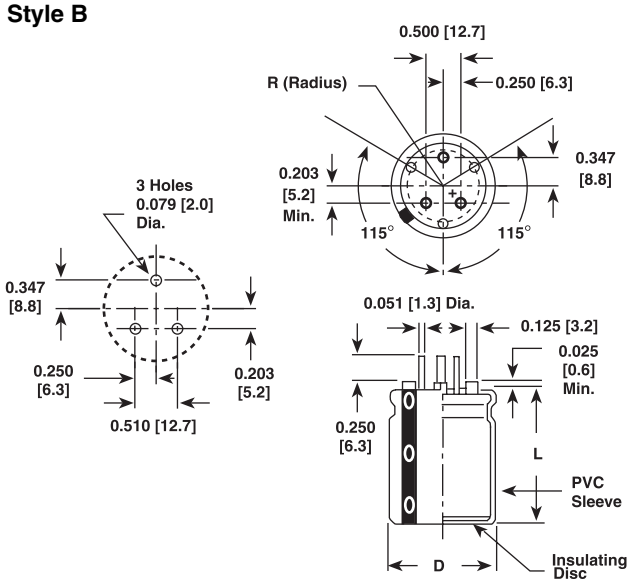

Style D

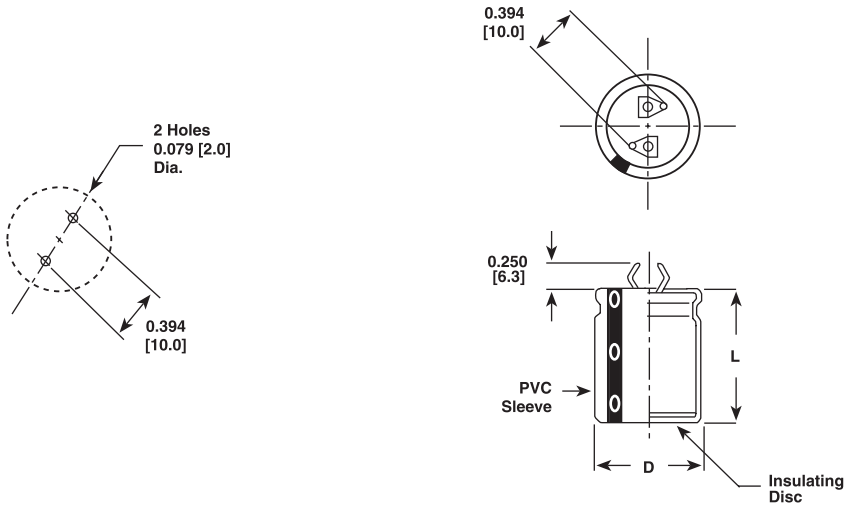

TERMINAL CONFIGURATION (numbers in brackets indicate millimeters)					
LEAD CODE	DESCRIPTION	OUTLINE DRAWINGS		AVAILABLE DIAMETERS	AVAILABLE VOLTAGES AND TYPES
		MOUNTING CONFIGURATION	TERMINAL CONFIGURATION		
D	Standard 2 pin snap-in	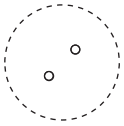	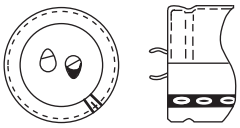	0.87 (22.0) - H 0.98 (25.0) - J 1.18 (30.0) - K 1.38 (35.0) - M	All voltages 81D, 81DA 82D, 82DA
A	2 straight wire lead molded cover with standoffs	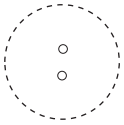	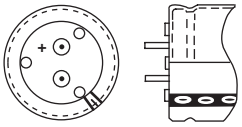	0.98 (25.0) - J 1.18 (30.0) - K 1.38 (35.0) - M	All voltages 82D, 82DA $V \leq 250\ V_{DC}$ 81D, 81DA
B	3 straight wire lead molded cover with standoffs	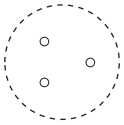	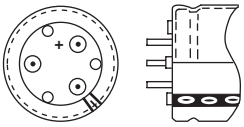	1.18 (30.0) - K 1.38 (35.0) - M	All voltages 82D, 82DA $V \leq 250\ V_{DC}$ 81D, 81DA

ORDERING EXAMPLE

Electrolytic capacitor 82D series: 82D 122 M 050 HA 2 D E3

DESCRIPTION	
CODE	EXPLANATION
82D	product type
122	capacitance value (1200 µF)
M	tolerance (M = ± 20 %)
50	voltage rating at 85 °C (50 V)
HA	can size (see dimensions table)
2	pvc insulating sleeve
D	terminal style (D = 2 pin snap-in)
E3	RoHS compliant

ELECTRICAL DATA AND ORDERING INFORMATION						
CAPACITANCE (µF)	PART NUMBER	NOMINAL CASE SIZE D x L	MAX. ESR at 25 °C (mΩ)		MAX. RIPPLE at + 85 °C (A)	
			120 Hz	20 to 40 kHz	120 Hz	20 to 40 kHz
16 WVDC at + 85 °C, SURGE = 20 V						
10 000.0	82D103M016HB2D	0.866 x 1.181 (22.0 x 30.0)	86.0	63.0	2.38	2.80
15 000.0	82D153M016HD2D	0.866 x 1.575 (22.0 x 40.0)	57.7	42.0	3.25	3.83
15 000.0 (1)	82D153M016JC2D	0.984 x 1.378 (25.0 x 35.0)	58.0	43.0	3.33	3.87
22 000.0	82D223M016KB2D	1.181 x 1.181 (30.0 x 30.0)	53.7	41.0	3.70	4.20
33 000.0	82D333M016KD2D	1.181 x 1.575 (30.0 x 40.0)	35.3	27.0	5.00	5.77
33 000.0	82D333M016MC2D	1.378 x 1.378 (35.0 x 35.0)	28.0	21.0	5.96	6.87
47 000.0	82D473M016MD2D	1.378 x 1.575 (35.0 x 40.0)	23.0	17.0	6.86	6.65

ELECTRICAL DATA AND ORDERING INFORMATION						
CAPACITANCE (µF)	PART NUMBER	NOMINAL CASE SIZE D x L	MAX. ESR at 25 °C (mΩ)		MAX. RIPPLE at + 85 °C (A)	
			120 Hz	20 to 40 kHz	120 Hz	20 to 40 kHz
25 WVDC at + 85 °C, SURGE = 30 V						
3300.0	82D332M025HA2D	0.866 x 0.984 (22.0 x 25.0)	110.0	76.0	1.98	2.39
4700.0 (1)	82D472M025HB2D	0.866 x 1.181 (22.0 x 30.0)	85.0	58.0	2.40	2.91
6800.0	82D682M025JB2D	0.984 x 1.181 (25.0 x 30.0)	67.0	47.0	2.94	3.49
10 000.0	82D103M025JD2D	0.984 x 1.545 (25.0 x 40.0)	43.4	31.0	4.22	4.96
15 000.0	82D153M025JE2D	0.984 x 1.969 (25.0 x 50.0)	33.9	24.0	4.97	5.96
6800.0	82D682M025KA2D	1.181 x 0.984 (30.0 x 25.0)	71.0	54.0	3.00	3.47
10 000.0	82D103M025KB2D	1.181 x 1.181 (30.0 x 30.0)	54.0	41.0	3.70	4.20
15 000.0	82D153M025KD2D	1.181 x 1.575 (30.0 x 40.0)	36.4	27.0	5.00	5.77
22 000.0	82D223M025MD2D	1.378 x 1.575 (35.0 x 40.0)	23.0	17.0	6.84	7.96
35 WVDC at + 85 °C, SURGE = 40 V						
2200.0	82D222M035HA2D	0.866 x 0.984 (22.0 x 25.0)	121.0	76.0	1.88	2.39
3300.0	82D332M035HB2D	0.866 x 1.181 (22.0 x 30.0)	92.0	57.0	2.30	2.94
4700.0	82D472M035JB2D	0.984 x 1.181 (25.0 x 30.0)	72.0	47.0	2.82	3.49
6800.0	82D682M035JD2D	0.984 x 1.575 (25.0 x 40.0)	46.6	30.0	4.08	5.08
10000.0	82D103M035JE2D	0.984 x 1.969 (25.0 x 50.0)	36.3	24.0	4.87	5.96
4700.0	82D472M035KA2D	1.181 x 0.984 (30.0 x 25.0)	75.0	54.0	2.92	3.42
12 000.0	82D123M035KD2D	1.181 x 1.575 (30.0 x 40.0)	37.7	27.0	4.89	5.77
10 000.0 (1)	82D103M035MB2D	1.378 x 1.181 (35.0 x 30.0)	36.0	24.0	4.97	6.10
15 000.0	82D153M035MD2D	1.378 x 1.575 (35.0 x 40.0)	25.0	16.3	6.57	8.13
50 WVDC at + 85 °C, SURGE = 63 V						
1200.0	82D122M050HA2D	0.866 x 0.984 (22.0 x 25.0)	148.0	79.0	1.71	2.32
1800.0	82D182M050HB2D	0.866 x 1.181 (22.0 x 30.0)	108.0	58.0	2.12	2.90
2200.0	82D222M050JB2D	0.984 x 1.181 (25.0 x 30.0)	85.0	48.0	2.61	3.49
3900.0	82D392M050JD2D	0.984 x 1.575 (25.0 x 40.0)	53.6	31.0	3.79	4.96
2700.0	82D272M050KA2D	1.181 x 0.984 (30.0 x 25.0)	85.0	54.0	2.73	3.42
4700.0 (1)	82D472M050MB2D	1.378 x 1.181 (35.0 x 30.0)	43.0	24.0	4.56	6.10
6800.0	82D682M050MD2D	1.378 x 1.575 (35.0 x 40.0)	28.0	16.0	6.21	8.21
10 000.0	82D103M050ME2D	1.378 x 1.969 (35.0 x 50.0)	22.0	13.0	7.60	9.87
63 WVDC at + 85 °C, SURGE = 79 V						
1000.0 (1)	82D102M063HA2D	0.866 x 0.984 (22.0 x 25.0)	151.0	75.0	1.69	2.39
1500.0	82D152M063JA2D	0.984 x 0.984 (25.0 x 25.0)	121.0	63.0	2.05	2.86
2200.0	82D222M063JC2D	0.984 x 1.378 (25.0 x 35.0)	72.0	38.0	2.97	4.09
3300.0	82D332M063JD2D	0.984 x 1.575 (25.0 x 40.0)	57.0	30.0	3.69	5.08
3300.0	82D332M063KB2D	1.181 x 1.181 (30.0 x 30.0)	68.0	41.0	3.28	4.20
6800.0	82D682M063KE2D	1.181 x 1.969 (30.0 x 50.0)	34.0	22.0	5.56	6.89
4700.0	82D472M063MC2D	1.378 x 1.378 (35.0 x 35.0)	36.0	20.0	5.24	7.04
100 WVDC at + 85 °C, SURGE = 125 V						
470.0	82D471M100HB2D	0.866 x 1.181 (22.0 x 30.0)	258.0	114.0	1.37	2.07
680.0	82D681M100JB2D	0.984 x 1.181 (25.0 x 30.0)	188.0	86.0	1.75	2.59
1000.0	82D102M100KB2D	1.181 x 1.181 (30.0 x 30.0)	136.0	66.0	2.31	3.31
1500.0	82D152M100KC2D	1.181 x 1.378 (30.0 x 35.0)	106.0	52.0	2.75	3.95
2200.0	82D222M100KE2D	1.181 x 1.969 (30.0 x 50.0)	66.0	33.0	4.02	5.69

ELECTRICAL DATA AND ORDERING INFORMATION

CAPACITANCE (µF)	PART NUMBER	NOMINAL CASE SIZE D x L	MAX. ESR at 25 °C (mΩ)		MAX. RIPPLE at + 85 °C (A)	
			120 Hz	20 to 40 kHz	120 Hz	20 to 40 kHz
200 WVDC at + 85 °C, SURGE = 250V						
150.0	82D151M200HA2D	0.866 x 0.984 (22.0 x 25.0)	1012.0	361.0	0.697	1.17
220.0	82D221M200HB2D	0.866 x 1.181 (22.0 x 30.0)	594.0	255.0	0.967	1.48
330.0	82D331M200HD2D	0.866 x 1.575 (22.0 x 40.0)	381.0	165.0	1.35	2.06
220.0	82D221M200JA2D	0.984 x 0.984 (25.0 x 25.0)	625.0	272.0	0.967	1.46
470.0	82D471M200JD2D	0.984 x 1.575 (25.0 x 40.0)	271.0	121.0	1.79	2.68
330.0	82D331M200KA2D	1.181 x 0.984 (30.0 x 25.0)	498.0	192.0	1.21	1.96
470.0	82D471M200KB2D	1.181 x 1.181 (30.0 x 30.0)	294.0	136.0	1.64	2.48
680.0	82D681M200KD2D	1.181 x 1575 (30.0 x 40.0)	221.0	87.0	2.14	3.41
1000.0	82D102M200KE2D	1.181 x 1.969 (30.0 x 50.0)	142.0	67.0	2.89	4.22
820.0	82D821M200MC2D	1.378 x 1.378 (35.0 x 35.0)	189.0	93.0	2.46	3.51
1000.0	82D102M200MD2D	1.378 x 1.575 (35.0 x 40.0)	149.0	74.0	2.88	3.41
250 WVDC at + 85 °C, SURGE = 300V						
120.0	82D121M250HA2D	0.866 x 0.984 (22.0 x 25.0)	1077.0	385.0	68.00	1.17
180.0	82D181M250HB2D	0.866 x 1.181 (22.0 x 30.0)	722.0	261.0	88.00	1.52
220.0	82D221M250JB2D	0.984 x 1.181 (25.0 x 30.0)	513.0	189.0	1.13	1.94
330.0	82D331M250JD2D	0.984 x 1.575 (25.0 x 40.0)	382.0	121.0	1.51	2.79
470.0	82D471M250MB2D	1.378 x 1.181 (35.0 x 30.0)	281.0	117.0	1.92	3.07
680.0	82D681M250MD2D	1.378 x 1.575 (35.0 x 40.0)	209.0	74.0	2.43	4.26
1000.0	82D102M250ME2D	1.378 x 1.969 (35.0 x 50.0)	132.0	58.0	3.32	5.21
400 WVDC at + 85°C, SURGE = 450 V						
47.0	82D470M400HA2D	0.866 x 0.984 (22.0 x 25.0)	4310.0	2450.0	0.34	0.45
68.0	82D680M400JA2D	0.984 x 0.984 (25.0 x 25.0)	3020.0	1720.0	0.44	0.58
100.0	82D101M400JB2D	0.984 x 1.181 (25.0 x 30.0)	2060.0	1176.0	0.56	0.74
150.0	82D151M400KB2D	1.181 x 1.181 (30.0 x 30.0)	1430.0	820.0	0.76	1.00
220.0	82D221M400KD2D	1.181 x 1.575 (30.0 x 40.0)	820.0	470.0	1.10	1.46
330.0	82D331M400MD2D	1.378 x 1.575 (35.0 x 40.0)	630.0	360.0	1.39	1.85
450 WVDC at + 85°C, SURGE = 500 V						
39.0	82D390M450HA2D	0.866 x 0.984 (22.0 x 25.0)	4690.0	2460.0	0.32	0.45
56.0	82D560M450JA2D	0.984 x 0.984 (25.0 x 25.0)	3280.0	1730.0	0.42	0.58
100.0	82D101M450JC2D	0.984 x 1.378 (25.0 x 35.0)	1730.0	915.0	0.65	0.89
150.0	82D151M450KC2D	1.181 x 1.378 (30.0 x 35.0)	1150.0	610.0	0.89	1.22
220.0	82D221M450MC2D	1.378 x 1.378 (35.0 x 35.0)	870.0	460.0	1.14	1.56
330.0	82D331M450ME2D	1.378 x 1.969 (35.0 x 50.0)	510.0	274.0	1.68	2.29

Note

- Additional Part Numbers in stock include 82D222M050HD2D, 82D472M050JE2D and 82D681M250MD2D. Many other capacitance ratings and voltages are available upon request. Please call for a quotation.

Disclaimer

All product specifications and data are subject to change without notice.

Vishay Intertechnology, Inc., its affiliates, agents, and employees, and all persons acting on its or their behalf (collectively, “Vishay”), disclaim any and all liability for any errors, inaccuracies or incompleteness contained herein or in any other disclosure relating to any product.

Vishay disclaims any and all liability arising out of the use or application of any product described herein or of any information provided herein to the maximum extent permitted by law. The product specifications do not expand or otherwise modify Vishay’s terms and conditions of purchase, including but not limited to the warranty expressed therein, which apply to these products.

No license, express or implied, by estoppel or otherwise, to any intellectual property rights is granted by this document or by any conduct of Vishay.

The products shown herein are not designed for use in medical, life-saving, or life-sustaining applications unless otherwise expressly indicated. Customers using or selling Vishay products not expressly indicated for use in such applications do so entirely at their own risk and agree to fully indemnify Vishay for any damages arising or resulting from such use or sale. Please contact authorized Vishay personnel to obtain written terms and conditions regarding products designed for such applications.

Product names and markings noted herein may be trademarks of their respective owners.