DIESES ZEICHNUNGSDOKUMENT WIRD DURCH TE INCORPORATED KONTROLLIERT. AENDERUNGEN, DIE DEM TECHNISCHEN FORTSCHRITT DIENEN, SIND VORBEHALTEN. DEN JEWEILS LETZTGUELTIGEN AENDERUNGSSTAND ERFAHREN SIE AUF ANFRAGE.

THIS DRAWING IS A CONTROLLED DOCUMENT FOR TE INCORPORATED. IT IS SUBJECT TO CHANGE AND THE CONTROLLING ENGINEERING ORGANIZATION SHOULD BE CONTACTED FOR THE LATEST REVISION.

| MATED WITH: PASSEND ZU: | LOC | DIST |
|---|---|---|
| - | AI | - |

PROJEKT NR.: E 75-9231

REVISIONS / AENDERUNGEN

| P | LTR | DESCRIPTION / BESCHREIBUNG | DATE | DWN | APVD |
|---|---|---|---|---|---|
| | B | MATERIAL CHANGED / WERKSTOFF GEÄNDERT | 23.09.96 | STEIN | - |
| | C | MATERIAL CHANGED / WERKSTOFF GEÄNDERT | 10.07.97 | ZITZ | - |
| | U1 | REV. CHANGED / REV. GEÄNDERT | 02.06.06 | HESS | MS |
| | U2 | REVISED PER ECO-09-027197 | 01FEB10 | KK | HMR |
| | U3 | ECR-10-022530 | 05FEB11 | KK | HMR |

| POLZ. | L±0.5 | BESTELL-NR. |
|---|---|---|
| - | - | - |
| 2 | 5.08 | 825 437 -2 |
| 3 | 7.62 | -3 |
| 4 | 10.16 | -4 |
| 5 | 12.70 | -5 |
| 6 | 15.24 | -6 |
| 7 | 17.78 | -7 |
| 8 | 20.32 | -8 |
| 9 | 22.86 | -9 |
| 10 | 25.40 | 1- -0 |
| 11 | 27.94 | 1- -1 |
| 12 | 30.48 | 1- -2 |
| 13 | 33.02 | 1- -3 |
| 14 | 35.56 | 1- -4 |
| 15 | 38.10 | 1- -5 |
| 16 | 40.64 | 1- -6 |
| 17 | 43.18 | 1- -7 |
| 18 | 45.72 | 1- -8 |
| 19 | 48.26 | 1- -9 |
| 20 | 50.80 | 2- -0 |
| 21 | 53.34 | ~~2- -1~~ |
| 22 | 55.88 | ~~2- -2~~ |
| 23 | 58.42 | ~~2- -3~~ |
| 24 | 60.96 | 2- -4 |
| 25 | 63.50 | 2- -5 |
| 26 | 66.04 | 2- -6 |
| 27 | 68.58 | ~~2- -7~~ |
| 28 | 71.12 | 2- -8 |
| 29 | 73.66 | ~~2- -9~~ |
| 30 | 76.20 | 3- -0 |
| 31 | 78.74 | 3- -1 |
| 32 | 81.28 | 3- -2 |
| 33 | 83.82 | ~~3- -3~~ |
| 34 | 86.36 | ~~3- -4~~ |
| 35 | 88.90 | ~~3- -5~~ OBSOLETE |
| 36 | 91.44 | 3- -6 |
| 37 | 93.98 | ~~3- -7~~ OBSOLETE |
| 38 | 96.52 | ~~3- -8~~ |
| 39 | 99.06 | ~~3- -9~~ |
| 40 | 101.60 | 4- -0 |
| 41 | 104.14 | ~~4- -1~~ |
| 42 | 106.68 | ~~4- -2~~ |
| 43 | 109.22 | ~~4- -3~~ OBSOLETE |
| 44 | 111.76 | ~~4- -4~~ |
| 45 | 114.30 | ~~4- -5~~ |
| 46 | 116.84 | ~~4- -6~~ |
| 47 | 119.38 | ~~4- -7~~ |
| 48 | 121.92 | ~~4- -8~~ |
| 49 | 124.46 | ~~4- -8~~ |
| 50 | 127.00 | 5- 825 437 -0 |

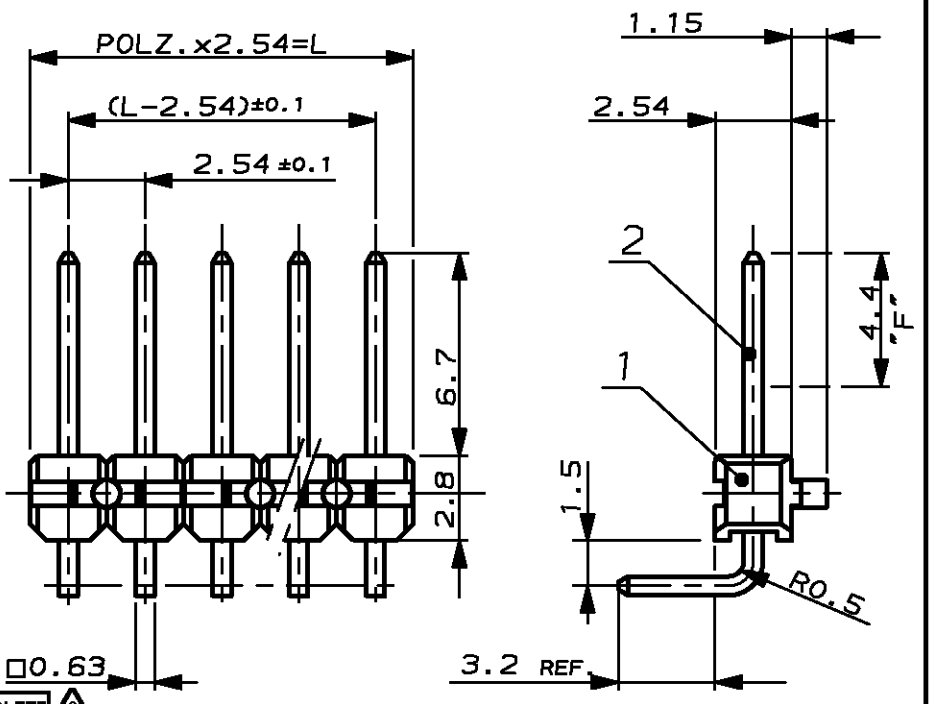


1 MATING SIDE: AREA "F" 0.8µm GOLD OVER 1.27µm NICKEL
SOLDER SIDE: MIN. 2.5µm TIN OVER 1.27µm NICKEL
STECKSEITE: IM BEREICH "F" 0.8µm GOLD ÜBER 1.27 µm NICKEL
LÖTSEITE: MIN. 2.5 µm ZINN ÜBER 1.27 µm NICKEL

2 OBSOLETE PARTS: OBSOLETE CIS STREAMLINING PER D.RENAUD/D.SINISI

3 OBSOLETE

| CUSTOMER PART NO | TE PART NO | REV. | PCS. | MATERIAL | SURFACE / COLOR | DESCRIPTION | ITEM NO |
|---|---|---|---|---|---|---|---|
| - | - | - | - | CuSn | 1 | CONTACT PIN / KONTAKTSTIFT | 2 |
| - | - | - | - | PBT GV | GREEN / GRÜN | PIN HOUSING / STIFTGEHÄUSE | 1 |

THIS DRAWING IS UNPUBLISHED. © COPYRIGHT 1975 BY TE INCORPORATED. ALL RIGHTS RESERVED.
VERTRAULICHE UNVEROEFFENTLICHTE ZEICHNUNG. ALLE RECHTE VORBEHALTEN.
RELEASED FOR PUBLICATION KW 39/96
FREI FUER VEROEFFENTLICHUNG

DIMENSIONS: DIMENSIONEN: mm

TOLERANCES UNLESS OTHERWISE SPECIFIED: ALLGEMEINTOLERANZEN
n. ISO 8015
n. ISO 2768 - mH -E
n. DIN 16901 - 140
0 PLC ±0.2
1-2 PLC ±0.2
3 PLC ±-
ANGLES/WINKEL ±1°

DWN DAHLHEIMER 05.12.75
CHK BÖCK 17.12.75
APVD -
PRODUCT SPEC / PRODUKTSPEZ. -
APPLICATION SPEC / VERARBEITUNGSSPEZ. -
WEIGHT / GEWICHT -

MATERIAL -
FINISH / OBERFLAECHE/FARBE -

TE Connectivity

NAME
AMPMODU II PIN HEADER 90° SINGLE ROW
AMPMODU II STIFTLEISTE 90° EINREIHIG

| SIZE | CAGE CODE | DRAWING NO / ZEICHNUNGS-NR. | RESTRICTED TO / NUR FUER |
|---|---|---|---|
| A4 | 00779 | C-825437 | - |

CUSTOMER DRAWING /KUNDENZEICHNUNG | MASSSTAB 4:1 | BLATT 1 OF / VON 1 | REV U3