Specification for release

Customer :

Ordercode: **82402304**

Description: **TVS Diode Array WE-TVS**

Package: **SOT23-6L**

compliant RoHS WÜRTH ELEKTRONIK

WÜRTH ELEKTRONIK

DATUM / DATE : 2010-01-27

A Features:

- ESD Protection for 4 Lines - unidirectional
- Provide ESD Protection for each line to
  IEC 61000-4-2 (ESD) ±15kV (air), ±8kV (contact)
  IEC 61000-4-4 (EFT) 35A (5/50ns)
  IEC 61000-4-5 (Lightning) 6A (8/20µs)
- Below 5V operating voltage: 2.5 - 3.3 - 4.2 - 5.0V
- Array of surge rated equivalent TVS diodes

Mechanical Characteristics:

- JEDEC SOT23-6L Package
- Molding compound flamability rating: UL94V-0
- Packaging: Tape & Reel

B Schematic and Pin Configuration:

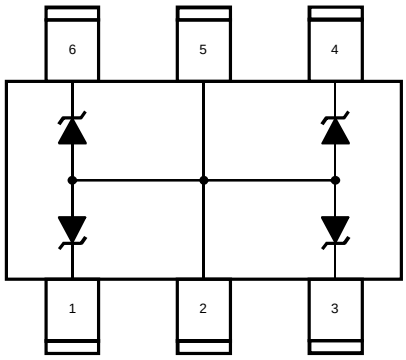

C Absolute Maximum Ratings:

	Symbol	Rating	Unit
Peak Pulse Current (tp = 8/20µs)	I_{PP}	6	A
ESD per IEC 61000-4-2 (Air / Contact)	V_{ESD}	16 / 10	kV
Operating Temperature	T_{Op}	-55 to +85	℃
Storage Temperature	T_{Sto}	-20 to +60	℃

D Electrical Characterisitcs:

Properties	Test Conditions	Value min	Value typ	Value max	Unit
V_{RWM}	Pin 1,3,4,6 to pin 2,5			5	V
V_{BV}	I_{BV}=1mA, pin 1,3,4,6 to pin 2,5	6.0			V
I_R	V_{RWM}=5V, pin 1,3,4,6 to pin 2,5			2.5	µA
V_F	I_F = 15mA, pin 2,5 to pin 1,3,4,6	0.6	0.8	1	V
v_C	I_{PP}=5A, tp=8/20µs, pin 1,3,4,6 to 2,5		6.8		V
v_{Cl}	I_{TLP} = 17A, pin 1,3,4,6 to pin 2,5		8.5		V
C_{IN}	V_{IO}=0V, f=1MHz, pin 1,3,4,6 to 2,5		13	17	pF

Würth Elektronik eiSos GmbH & Co. KG

D-74638 Waldenburg · Max-Eyth-Strasse 1 · Germany · Phone (+49) (0) 7942 - 945 - 0 · Fax (+49) (0) 7942 - 945 - 400

http://www.we-online.com

E Typical Characteristics:

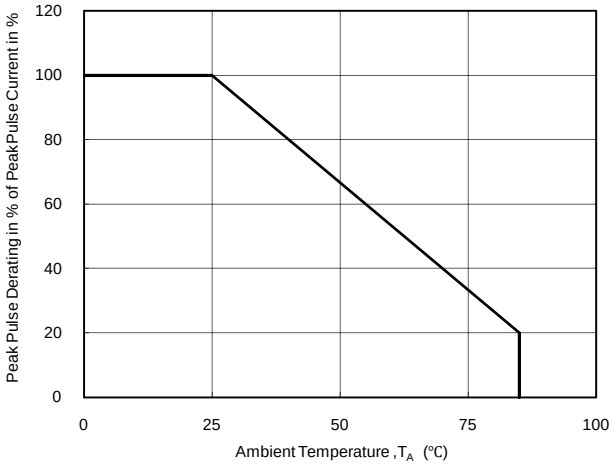

Power Derating Curve

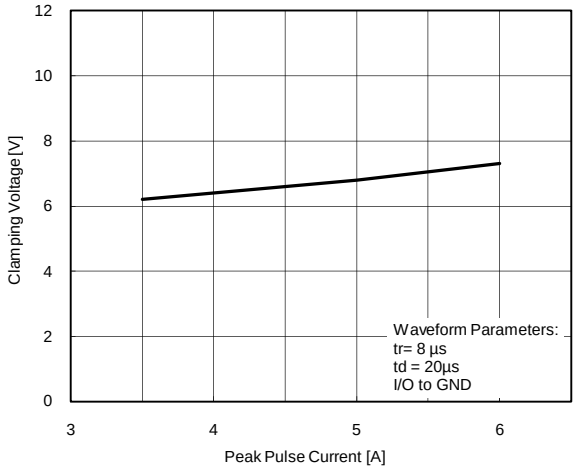

Clamping Voltage vs. Peak Pulse Current

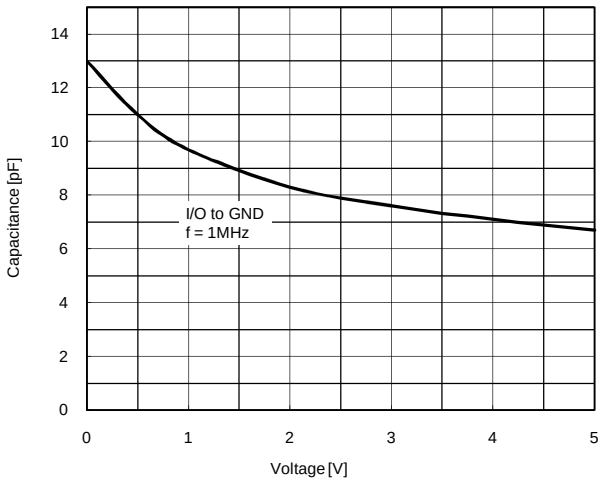

Variation of C_{IO} vs. V_{IO}

Specification for release

Customer :

Ordercode: **82402304**

Description : **TVS Diode Array WE-TVS**

Package: **SOT23-6L**

compliant RoHS WÜRTH ELEKTRONIK

WÜRTH ELEKTRONIK

DATUM / DATE : 2010-01-27

E Typical Characteristic:

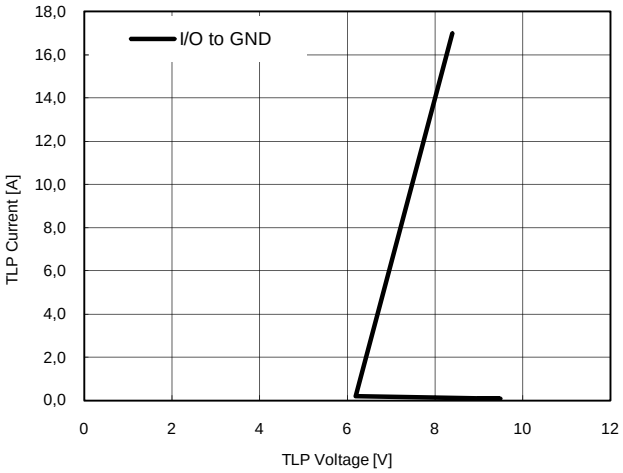

Transmission Line Pulsing (TLP) Measurement

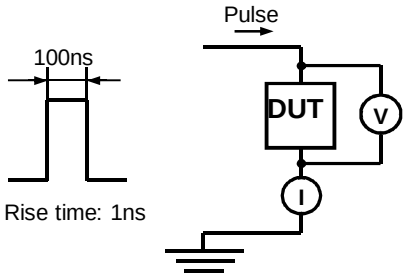

Transmission Line Pulsing System

F Recommended Land Layout:

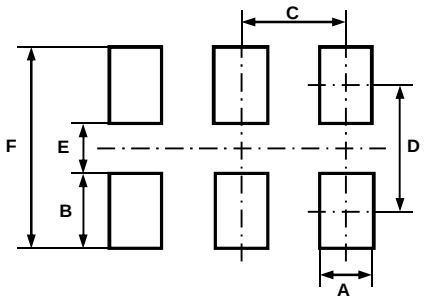

A	0.60	mm
B	1.10	mm
C	0.95	mm
D	2.50	mm
E	1.40	mm
F	3.60	mm

G Body Marking:

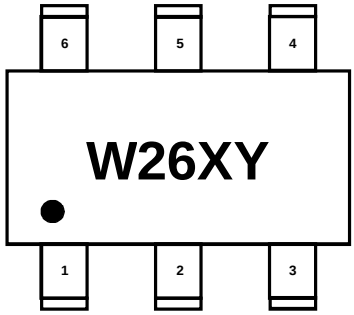

W26: Device Code

X: Date Code

Y: Control Code

Specification for release

Customer :

Ordercode: **82402304**

Description : **TVS Diode Array WE-TVS**

Package: **SOT23-6L**

compliant RoHS WÜRTH ELEKTRONIK

WÜRTH ELEKTRONIK

DATUM / DATE : 2010-01-27

H Dimensions:

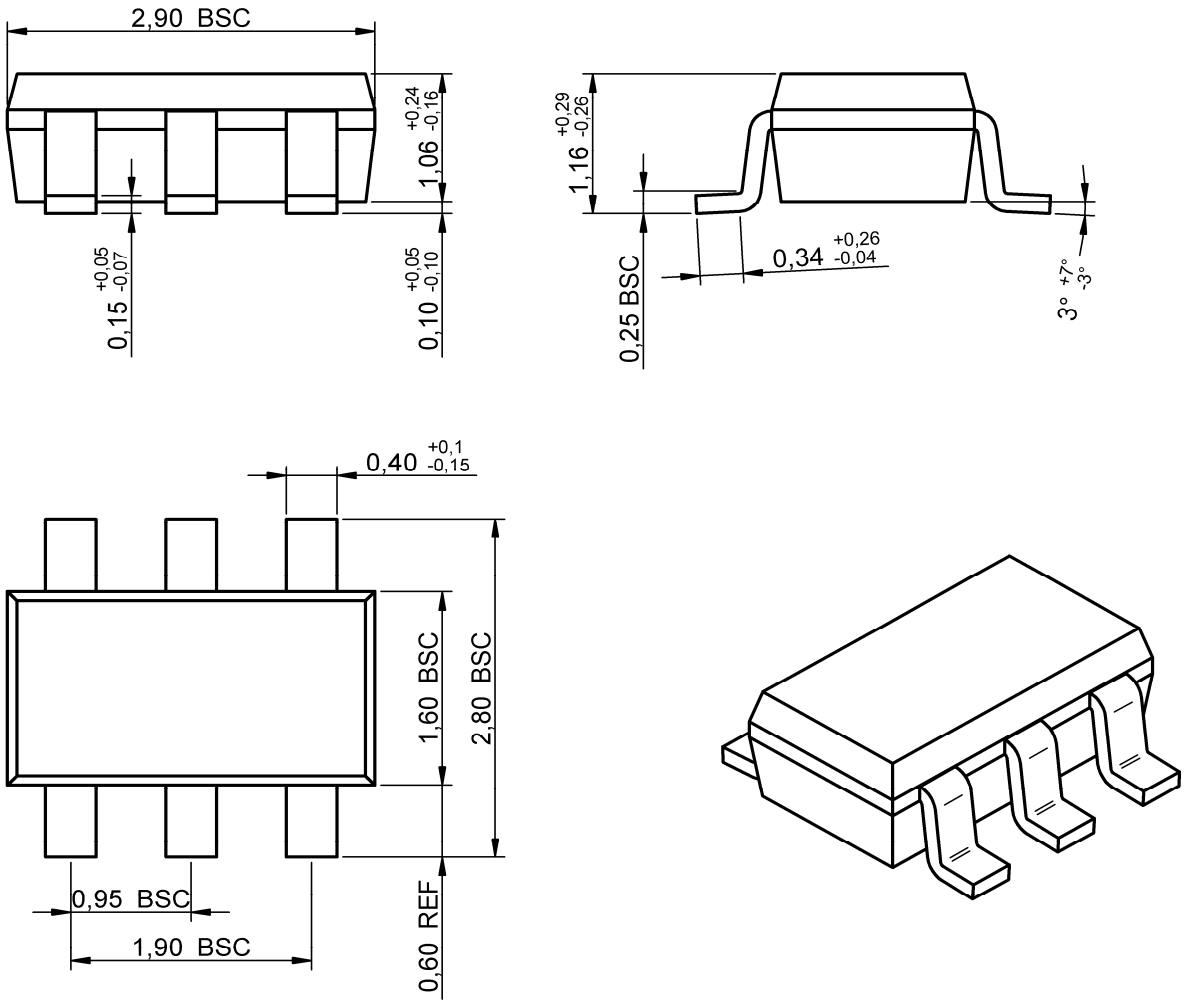

Scale - 10:1

Specification for release

Customer :
Ordercode: **82402304**
Description : **TVS Diode Array WE-TVS**
Package: **SOT23-6L**

I Tape:

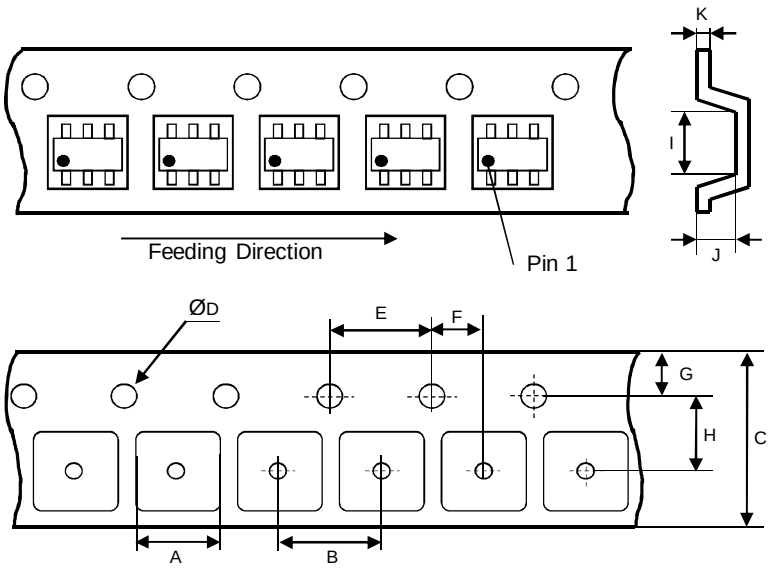

A	**3.15 ± 0.15**	mm
B	**4.00 ± 0.10**	mm
C	**8.00 ± 0.20**	mm
D	**1.55 ± 0.05**	mm
E	**4.00 ± 0.10**	mm
F	**2.00 ± 0.05**	mm
G	**1.75 ± 0.10**	mm
H	**3.50 ± 0.05**	mm
I	**3.25 ± 0.15**	mm
J	**1.35 ± 0.15**	mm
K	**0.25 ± 0.02**	mm

J Reel:

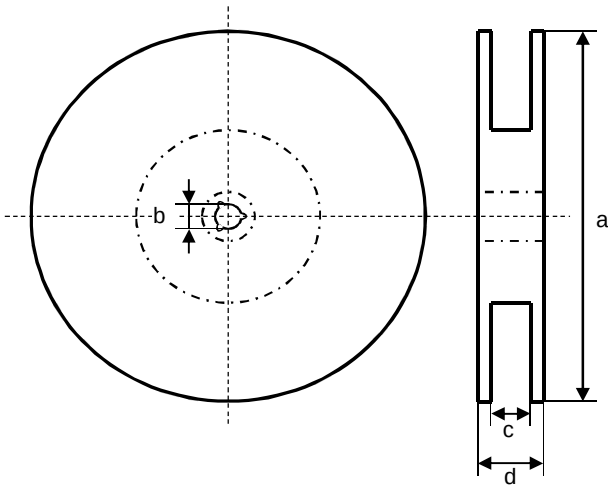

a	**178.0 ± 2.0**	mm
b	**13.0 ± 0.8**	mm
c	**10.0 ± 1.5**	mm
d	**12.5 ± 2.0**	mm

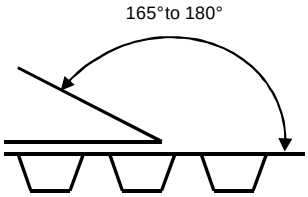

Quantity per Reel:	3000

General Release:

Customer				
Date	Signature			
Würth Elektronik				
		JB	Version 1	2010-01-27
Checked	Approved	Name	**Modification**	Date

This electronic component has been designed and developed for usage in general electronic equipment. Before incorporating this component into any equipment where higher safety and reliability is especially required or if there is the possibility of direct damage or injury to human body, for example in the range of aerospace, aviation, nuclear control, submarine, transportation, (automotive control, train control, ship control), transportation signal, disaster prevention, medical, public information network etc, Würth Elektronik eiSos GmbH must be informed before the design-in stage. In addition, sufficient reliability evaluation checks for safety must be performed on every electronic component which is used in electrical circuits that require high safety and reliability functions or performance.