## REVISIONS

| REV. | DESCRIPTION | ECN NO. | DATE |
|---|---|---|---|
| 01 | FIRST RELEASE | N/A | 05/06/14 |
| | | | |
| | | | |
| | | | |
| | | | |
| | | | |
| | | | |
| | | | |

When ordering, please add suffix “T” to the part number for tape & reel packaging (330mm reel).

PAGE 4 & 5 ARE FOR INTERNAL USE ONLY

| PART NUMBER | PART DESCRIPTION |
|---|---|
| 824-00485F | RoHS compliant per EU Directive 2011/65/EU |

TITLE

TRANSFORMER, 1000BASE-T(PoE), SINGLE, SMD, 24 PIN, EXT. TEMP.

## WARNING !

ALL SHEETS OF THIS DOCUMENT ARE CONTROLLED DOCUMENTATION AND ARE NOT TO BE RELEASED OUTSIDE OF E&E OR ITS SUB-CONTRACTORS WITHOUTAUTHORIZATION.

UNLESS OTHERWISE SPECIFIED, DIMENSIONS ARE IN INCH/mm.

TOLERANCE ARE:

| INCH | mm | ANGLE |
|---|---|---|
| .XXX ± .005 | .XX ± .13 | X.X ± 0.3 |
| .XX ± .02 | .X ± .5 | X. ± 1 |

| APPROVALS | | DATE |
|---|---|---|
| DRAWN BY | Y.L. YUNG | 05/06/14 |
| PROJ. ENG | Y.L. YUNG | 05/06/14 |
| APPROVED BY | D. YUNG | 05/06/14 |
| Q.A. | D. LUO | 05/06/14 |

E & E Magnetic Products Ltd.

DRAWING NO./MODEL: 824-00485F

REV: 01

SCALE: DO NOT SCALE

PAGE 1 OF 5

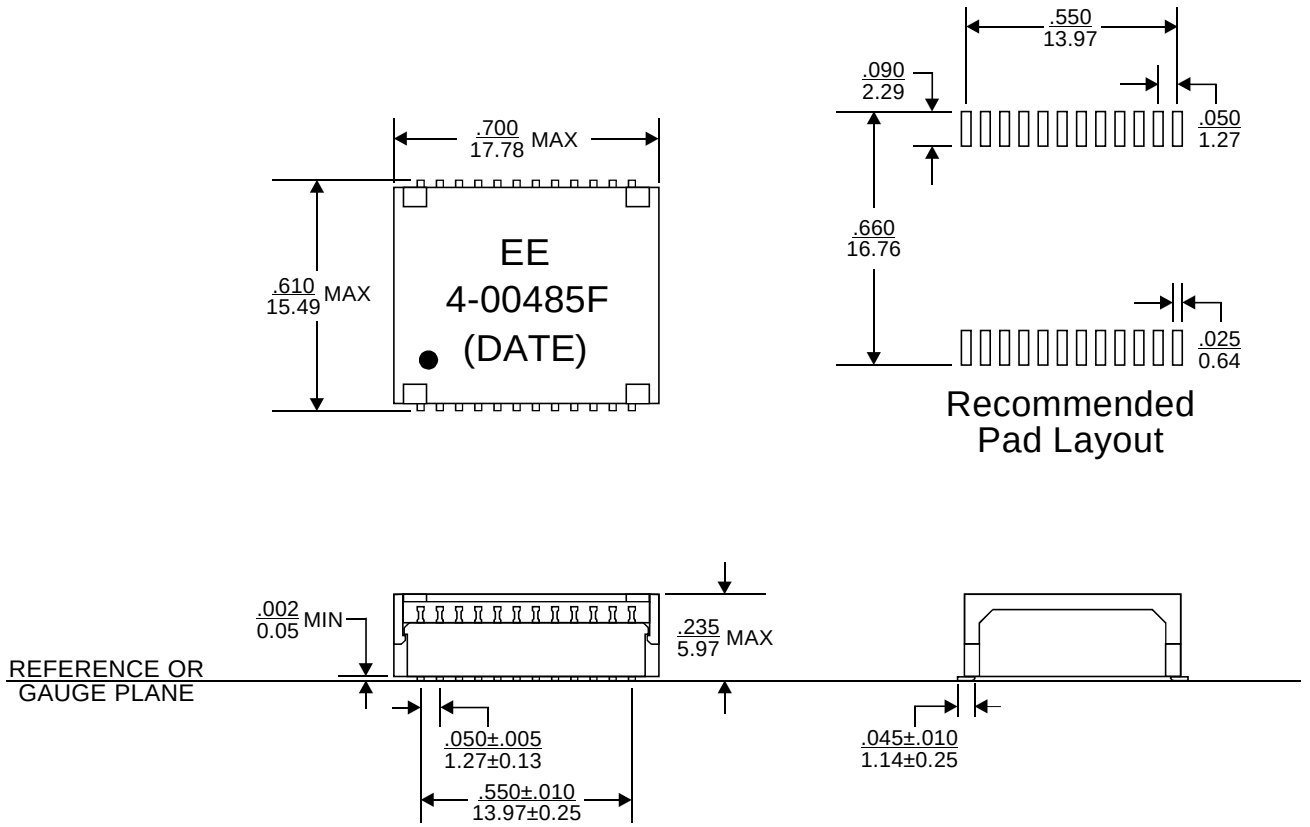


# MECHANICAL OUTLINE

1. Dimensions are specified in $\frac{\text{inches}}{\text{mm}}$ with higher precedence in inches.
2. Unless otherwise specified, all tolerances are ± $\frac{.010}{0.25}$.
3. Coplanarity: $\frac{.004}{0.10}$ max.
4. "(DATE)" includes at least the manufacturing date code(in YYWW format) plus two character country code.

E & E Magnetic Products Ltd.

| DRAWING NO./MODEL | REV |
|---|---|
| 824-00485F | 01 |

| SCALE | PAGE | OF |
|---|---|---|
| DO NOT SCALE | 2 | 5 |

## ELECTRICAL SPECIFICATION @25°C:

| PARAMETERS | UNIT | EACH CHANNEL |
|---|---|---|
| Turns Ratio (Primary):(Secondary) | - | 1CT:1CT ± 3% |
| Polarity (Primary):(Secondary) | - | Per Schematic |
| Inductance, Ls(Primary) @100kHz, 0.1Vrms, 8mADC | uH | 350 Min |
| Insertion Loss @1-100MHz | dB | 1.1 Max |
| Insertion Loss @100-125MHz | dB | 2.0 Max |
| Return Loss @1-40MHz | dB | 18.0 Min |
| Return Loss @50MHz | dB | 16.1 Min |
| Return Loss @60MHz | dB | 14.5 Min |
| Return Loss @80MHz | dB | 12.0 Min |
| Return Loss @100MHz | dB | 10.1 Min |
| CMRR @1-100MHz | dB | 33 Min |
| Crosstalk @1-100MHz, Between Channels | dB | 33 Min |
| HIPOT (Primary):(Secondary) | Vrms | 1500 Min |

5. Operating temperature: -40°C to +85°C.

6. Balanced DC line current capability (Line Side): 350mADC maximum.

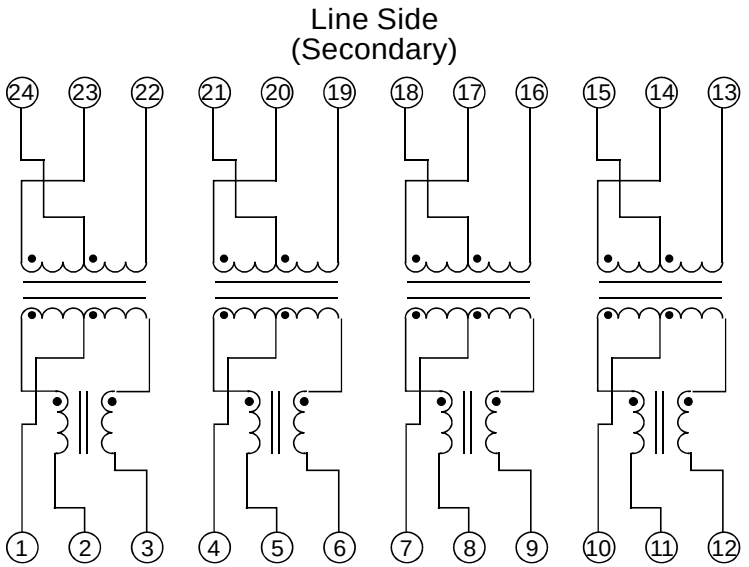


SCHEMATIC

E & E Magnetic Products Ltd.

| DRAWING NO./MODEL | REV |
|---|---|
| 824-00485F | 01 |

| SCALE | PAGE | OF |
|---|---|---|
| DO NOT SCALE | 3 | 5 |