Elec & Eltek依利安達
E & E Magnetic Products Limited

1000BASE-T SINGLE PORT MAGNETIC MODULE

- Compliant with IEEE802.3 standard including 350uH OCL
- Operating temperature 0°C to +70°C
- RoHS compliant

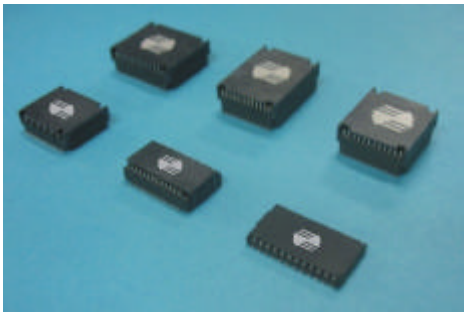

ELECTRICAL SPECIFICATION @ 25°C

Part Number	PoE	Insertion Loss (dB Max)		Return Loss (dB Min)				CMRR (dB Min)	Crosstalk (dB Min)			Hipot (Vrms)
		0.1-100MHz	100-125MHz	30MHz	60MHz	80MHz	100MHz	-	30MHz	60MHz	100MHz	
824-00418R	Yes	1.1	2.0	18	12	12	10	-	43	37	33	1500
		0.1-100MHz	100-125MHz	0.5-40MHz		40-100MHz		0.1-100MHz	0.1-100MHz			
824-00419R	No	1.1	1.5	18		12-20Log(F/80)		30	33-20Log(F/100)			1500
		0.1-100MHz		1-30MHz	40MHz	50MHz	60-80MHz	0.1-100MHz	30MHz	60MHz	100MHz	
824-00422F	No	1.0		18	14.5	13.1	12	35	45	40	33	1500
824-C0160F[1]	No	1.0		18	14.5	13.1	12	35	45	40	35	1500
		0.1-100MHz		1-40MHz		40-100MHz		1-100MHz	1-100MHz			
824-00444F	No	1.0		18		12-20Log(F/80)		33	35			1500
		0.1-100MHz		1-30MHz	40-50MHz	60-80MHz	100MHz	0.1-100MHz	0.1-100MHz			
824-00387R	No	1.0		18	16	12	10	33	33			1500
		1-100MHz		1-40MHz	50MHz	60-80MHz	100MHz	1-100MHz	1-100MHz			
824-00427R	No	1.0		18	16	12	10	33	33			1500
		0.1-100MHz		1-40MHz	50MHz	60MHz	80MHz	100MHz	1-100MHz	1-100MHz		
824-00451R	No	1.0		18	16.1	14.5	12	10.1	30	30		1500
824-C0328R[1]	No	1.0		18	16	14.5	12	10	33	33		1500
		0.1-100MHz	100-125MHz	1-40MHz	50MHz	60MHz	80MHz	100MHz	1-100MHz	1-100MHz		
824-C0332R[1]	No	1.0	1.5	18	16	14.5	12	10	30	33		1500

ELECTRICAL SPECIFICATION @ 25°C

Part Number	PoE	Insertion Loss (dB Max)	Return Loss (dB Min)				CMRR (dB Min)		Crosstalk (dB Min)	Hipot (Vrms)
		0.3-100MHz	0.5-40MHz	40-60MHz	60-80MHz	80-100MHz	0.3-32MHz	32-100MHz	0.3-100MHz	
824-00401F	No	1.0	18	15	12	10	42	33	35	1500

ELECTRICAL SPECIFICATION @ 25°C

Part Number	PoE	Insertion Loss (dB Max)				Return Loss (dB Min)		CMRR (dB Min)	Crosstalk (dB Typ)	Hipot (Vrms)
		1-100MHz				1-40MHz	40-100MHz	1-100MHz	1-100MHz	
824-00411F[1]	No	1.0				18	12-20Log(F/80)	30	33	1500
		0.1-1MHz	1-65MHz	65-100MHz	100-125MHz	0.5-40MHz	40-100MHz	0.1-100MHz	1-100MHz	
824-C0053F	No	1.1	0.5	0.8	1.2	18	12-20Log(F/80)	30	35-20Log(F/100)	1500

1/F., Harbour View 1, No.12 Science Park East Avenue, Phase II, Hong Kong Science Park, Shatin, N.T. Hong Kong
Tel: (852) 2954 3333 • Fax: (852) 2954 3304

ELECTRICAL SPECIFICATION @ 25°C

Part Number	PoE	Insertion Loss (dB Max)			Return Loss (dB Min)				CMRR (dB Min)	Crosstalk (dB Min)			Hipot (Vrms)
		1-65MHz	65-100MHz	100-125MHz	1-30MHz	40-50MHz	60-80MHz	100MHz	1-100MHz	1-40MHz	60MHz	100MHz	
824-00369R	No	1.0	1.1	1.5	18	16	12	10	30	40	35	30	1500

ELECTRICAL SPECIFICATION @ 25°C

Part Number	PoE	Insertion Loss (dB Max)	Return Loss (dB Min)		DM-CMRR (dB Min)		Crosstalk (dB Min)		Hipot (Vrms)
		1-100MHz	1-40MHz	40-100MHz	1-100MHz		1-100MHz		
824-00450R [1]	No	1.0	18	12-20Log(F/80)	33		33		1500
		1-100MHz	1-40MHz	50MHz	60-80MHz	100MHz	30MHz	60MHz	100MHz	30MHz	60MHz	100MHz	
824-00459F	No	1.0	18	16	12	10	43	37	33	45	40	35	1500

Notes:

1. Operating temperature range: -40°C to +85°C.
2. "F" represents the test frequency specified in MHz.

MECHANICAL DIMENSIONS

824-00418R / 824-00419R / 824-00422F / 824-C0053F / 824-C0160F / 824-C0328R / 824-C0332R

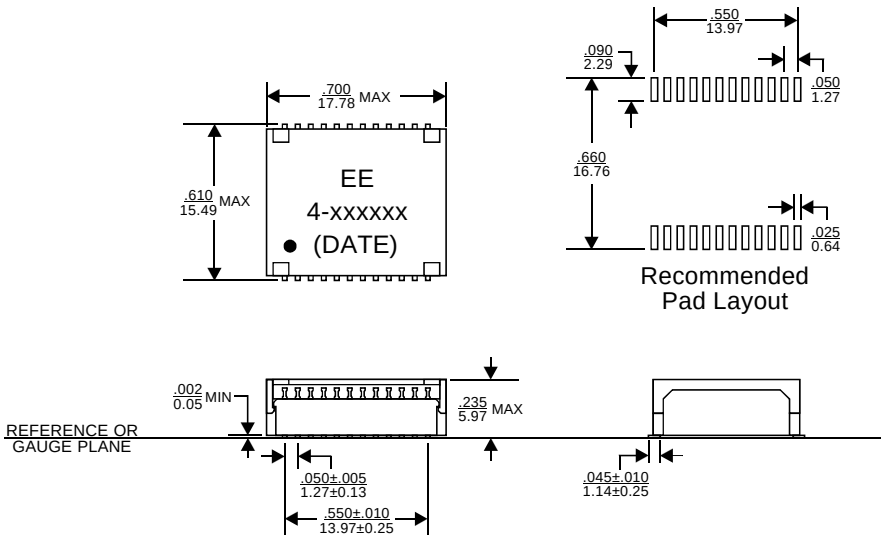

MECHANICAL DIMENSIONS

824-00411F / 824-00427R / 824-00444F / 824-00450R

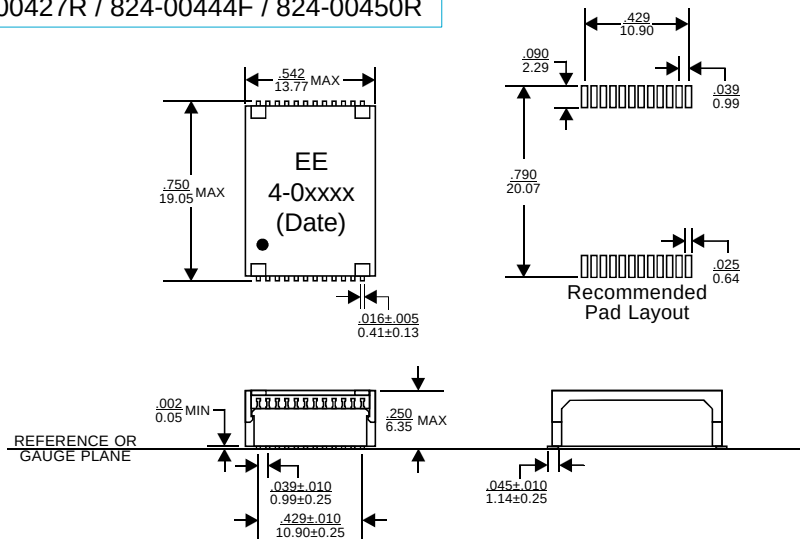

MECHANICAL DIMENSIONS

824-00451R

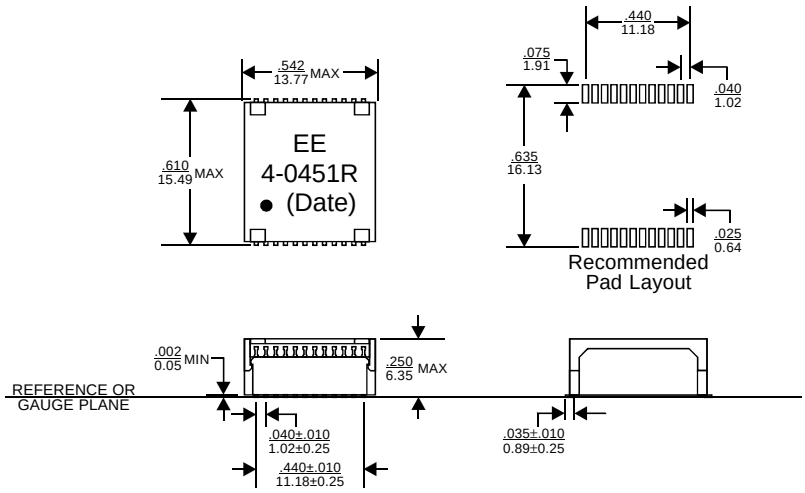

MECHANICAL DIMENSIONS

824-00369R

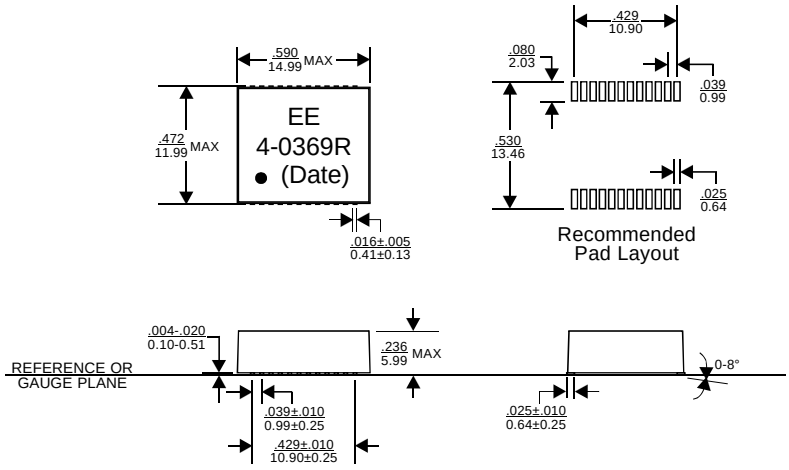

MECHANICAL DIMENSIONS

824-00387R

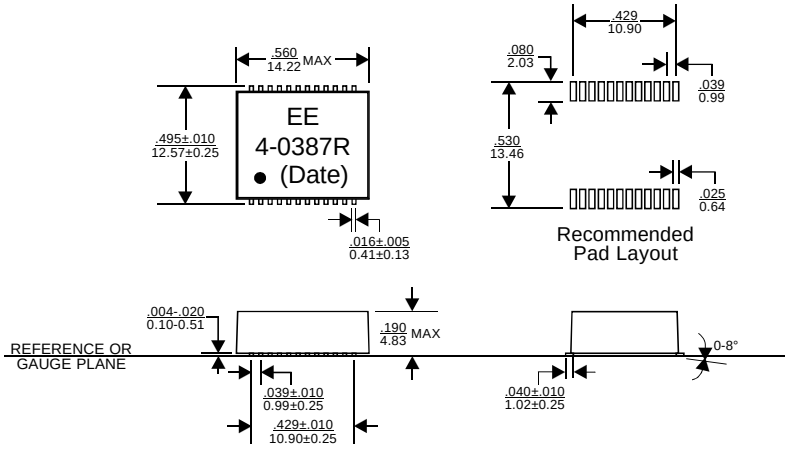

MECHANICAL DIMENSIONS

824-00401F

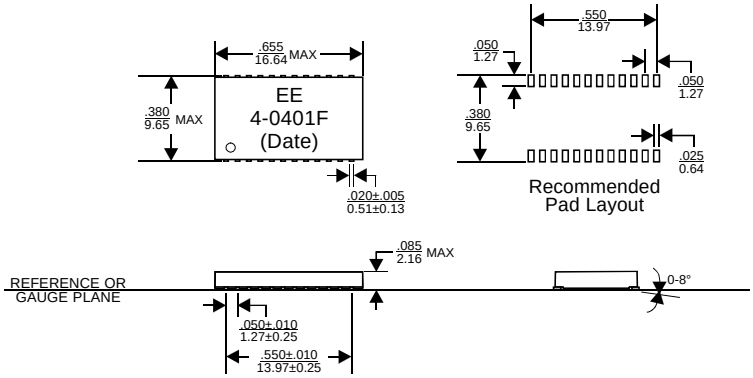

MECHANICAL DIMENSIONS

824-00459F

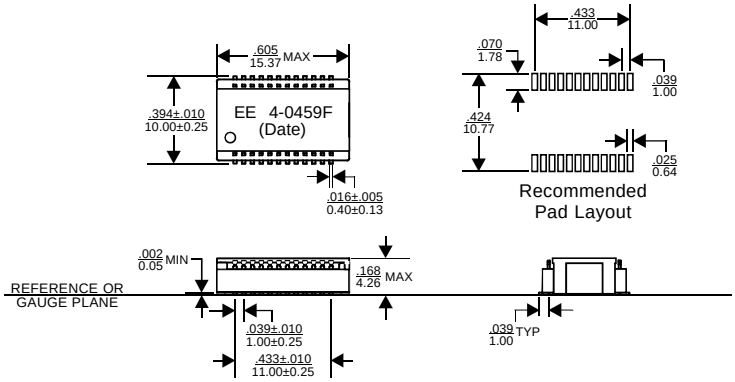

Notes:

3. Dimensions are specified in $\frac{\text{inches}}{\text{mm}}$ with higher precedence in inches.

4. Unless otherwise specified, all tolerance are $\pm \frac{.010}{0.25}$.

5. Coplanarity: $\frac{.004}{0.10}$ max.

6. "(DATE)" includes at least the manufacturing date code(in YYWW format) plus two character country code.

7. When ordering, please add suffix “T” to the part number for tape & reel packaging (330mm reel).

SCHEMATICS

824-00369R / 824-00411F / 824-00444F / 824-C0053F / 824-C0160F

LINE SIDE (Secondary)

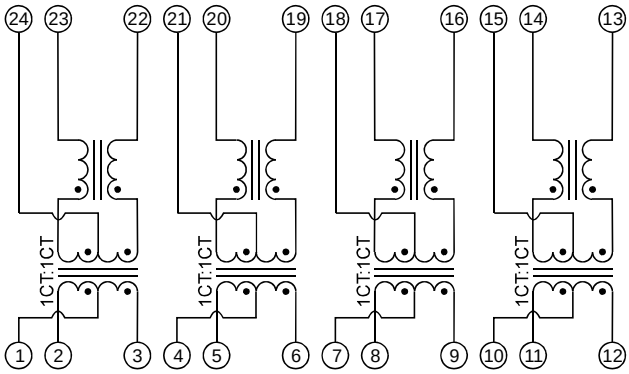

CHIP SIDE (Primary)

SCHEMATICS

824-00387R / 824-00418R / 824-00419R / 824-00451R / 824-C0332R

LINE SIDE (Secondary)

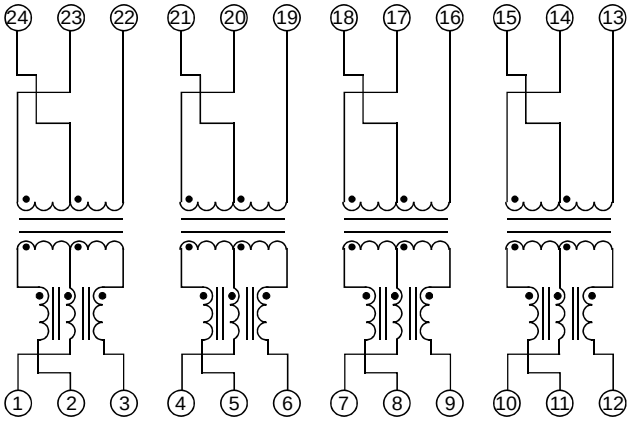

CHIP SIDE (Primary)

SCHEMATICS

824-00422F / 824-00427R / 824-00450R / 824-C0328R

LINE SIDE (Secondary)

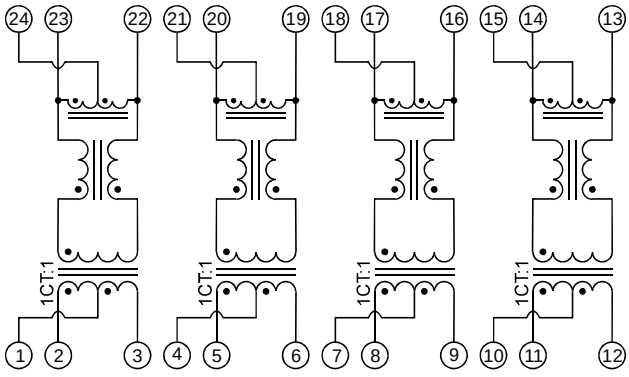

CHIP SIDE (Primary)

SCHEMATICS

824-00401F

LINE SIDE (Secondary)

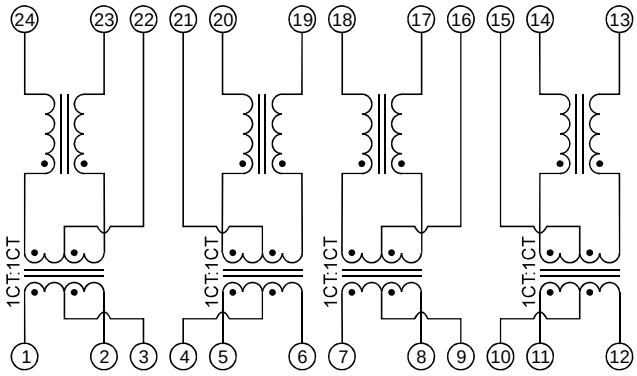

CHIP SIDE (Primary)

SCHEMATICS

824-00459F

LINE SIDE (Secondary)

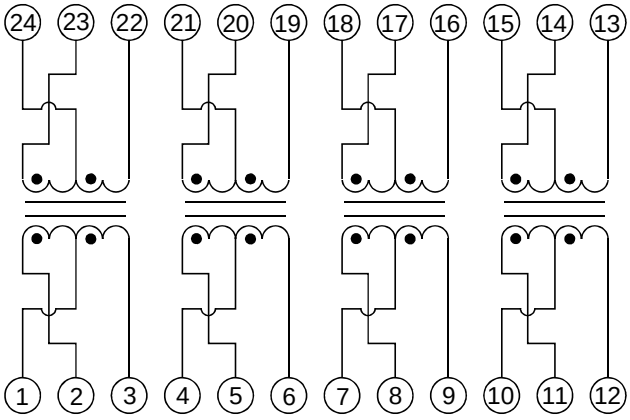

CHIP SIDE (Primary)

PACKAGING

824-00418R / 824-00419R / 824-00422F / 824-C0053F / 824-C0160F / 824-C0328R / 824-C0332R

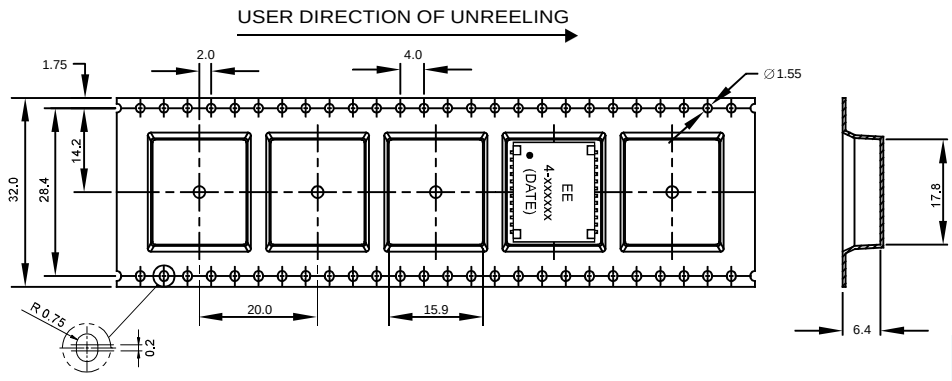

Weight (in gram) : 1.7 typ.

Tape & Reel : 450 / reel

PACKAGING

824-00411F / 824-00427R / 824-00444F / 824-00450R

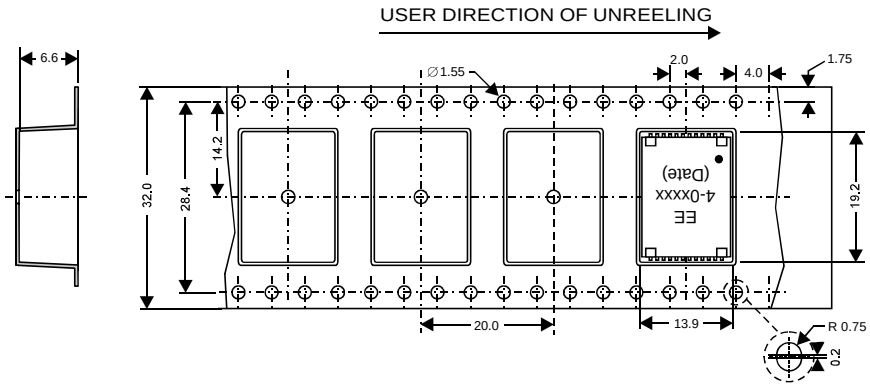

Weight (in gram) : 1.9 typ.
Tape & Reel : 450 / reel

PACKAGING

824-00451R

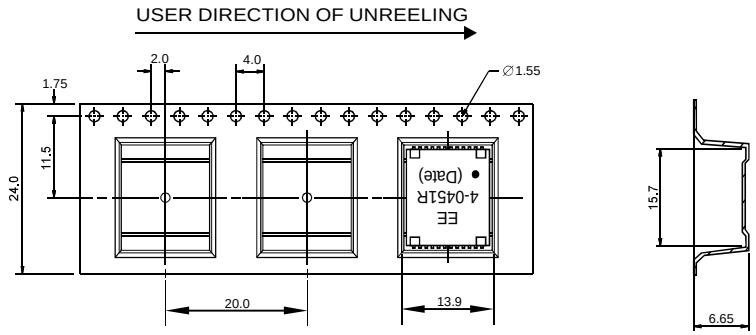

Weight (in gram) : 1.8 typ.
Tape & Reel : 450 / reel

PACKAGING

824-00369R

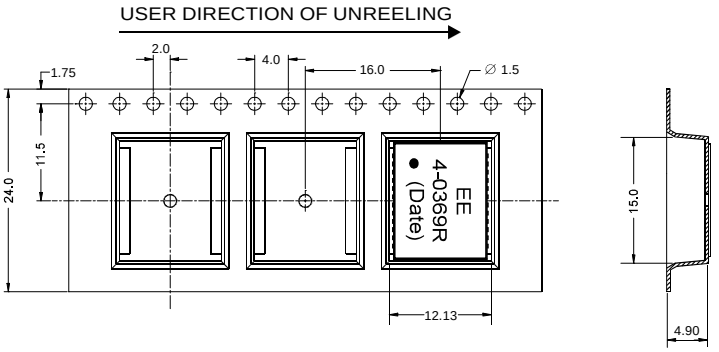

Tape & Reel : 750 / reel

PACKAGING

824-00387R

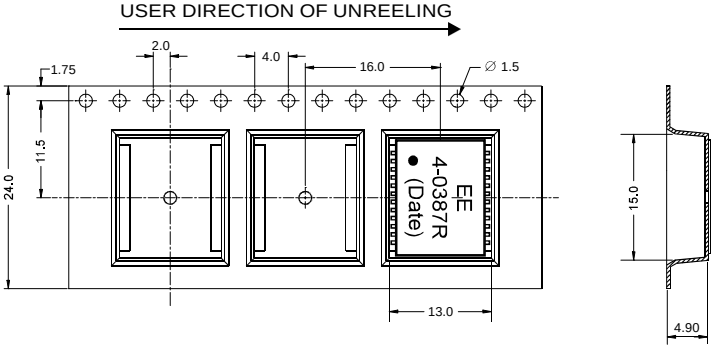

Tape & Reel : 750 / reel

PACKAGING

824-00459F

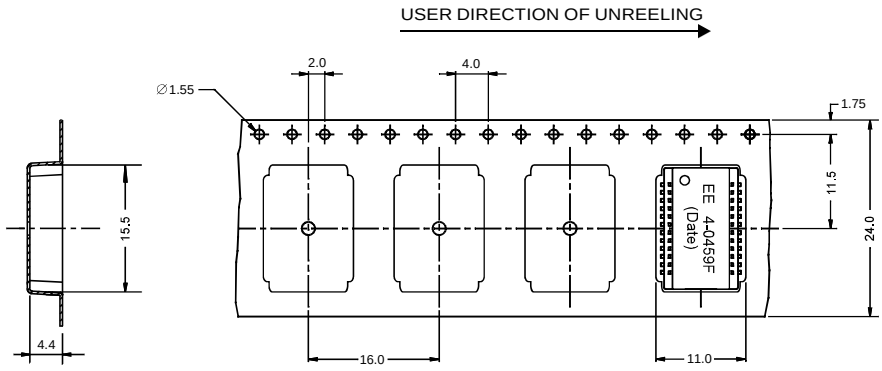

Weight (in gram) : 0.7 typ.

Tape & Reel : 850 / reel

FOR MORE INFORMATION, PLEASE CONTACT

HEADQUARTER
1/F., Harbour View 1, No.12 Science Park East Avenue,
Phase II, Hong Kong Science Park, Shatin, N.T.
Hong Kong
Tel: (852) 2954 3333 Fax: (852) 2954 3304
Email: eempl@eleceltek.com
Website: http://www.eleceltek.com / www.eemagnetic.com

Information herein is for reference only and subject to change without notice. It does not constitute any representation, warranty or commitment of the company in respect of the products in any aspect. All logos, brands and product names mentioned herein are trademarks or registered trademarks of their respective owners. The company does not assume any liability arising out of the application or use of any product or circuit described herein. Copyrights 2009, E & E Magnetic Products Limited.