Elec & Eltek依利安達
E & E Magnetic Products Limited

10GBASE-T SINGLE PORT MAGNETIC MODULE

- Compliant with IEEE802.3 standard
- Operating temperature 0°C to +70°C
- RoHS compliant



ELECTRICAL SPECIFICATION @ 25°C

Part Number	Insertion Loss (dB Max)	Return Loss (dB Min)		CM-DMRR (dB Min)		Crosstalk (dB Min)		Hipot (Vrms)
	1-500MHz	1-40MHz	40-500MHz	1-250MHz	250-500MHz	1-100MHz	100-500MHz	
824-00405R	1.5	18	17-10Log(F/40)	30	22	40	30	1500
824-00437R	1.5	18	17-10Log(F/40)	30	22	40	30	1500

Notes:

1. "F" represents the test frequency specified in MHz.

MECHANICAL DIMENSIONS

824-00405R / 824-00437R

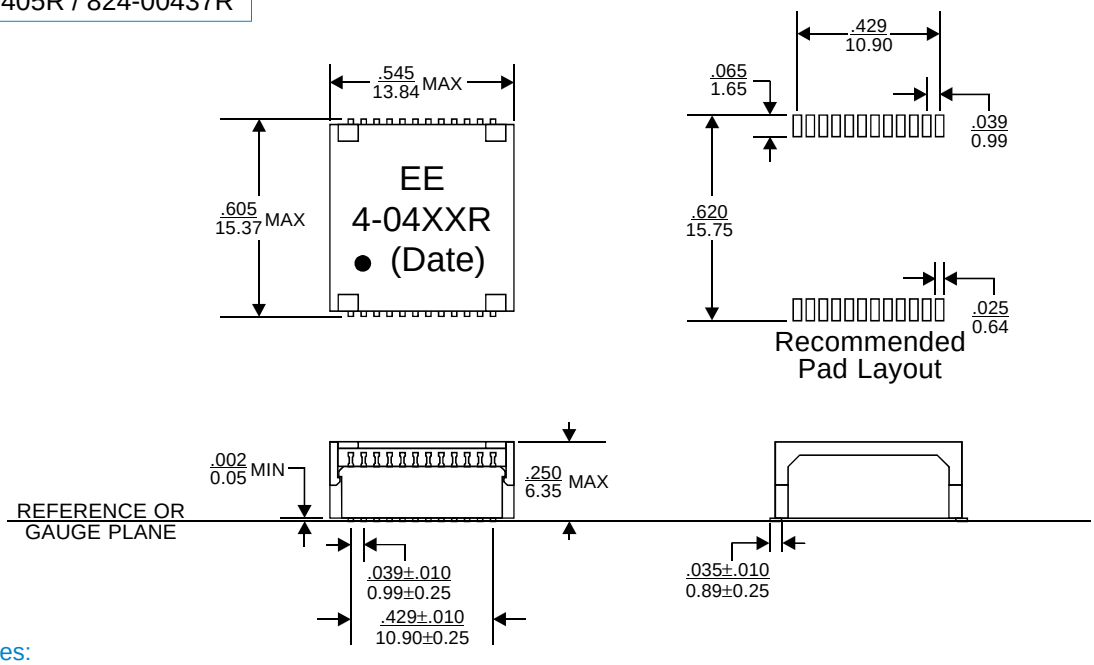

Notes:

2. Dimensions are specified in $\frac{\text{inches}}{\text{mm}}$ with higher precedence in inches.
3. Unless otherwise specified, all tolerance are $\pm \frac{.010}{0.25}$.
4. Coplanarity: $\frac{.004}{0.10}$ max.
5. "(DATE)" includes at least the manufacturing date code(in YYWW format) plus two character country code.
6. When ordering, please add suffix “T” to the part number for tape & reel packaging (330mm reel).

1/F., Harbour View 1, No.12 Science Park East Avenue, Phase II, Hong Kong Science Park, Shatin, N.T. Hong Kong
Tel: (852) 2954 3333 • Fax: (852) 2954 3304

10GBASE-T SINGLE PORT MAGNETIC MODULE

SCHEMATICS

824-00405R

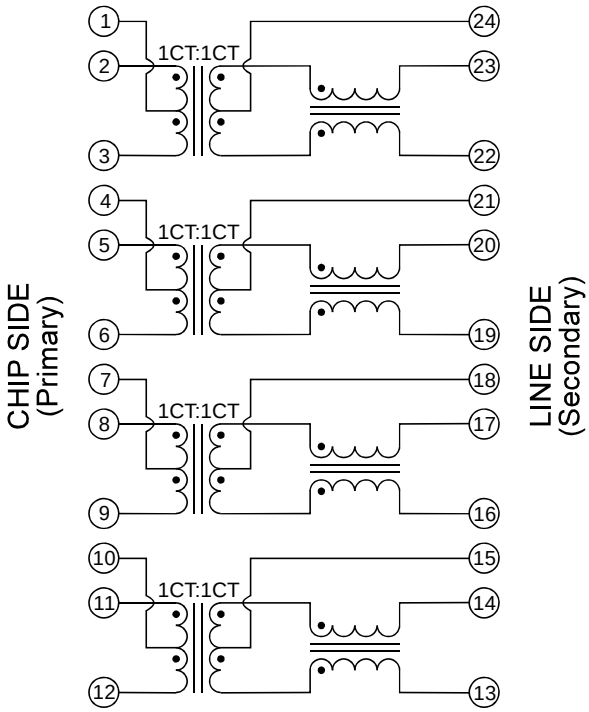

824-00437R

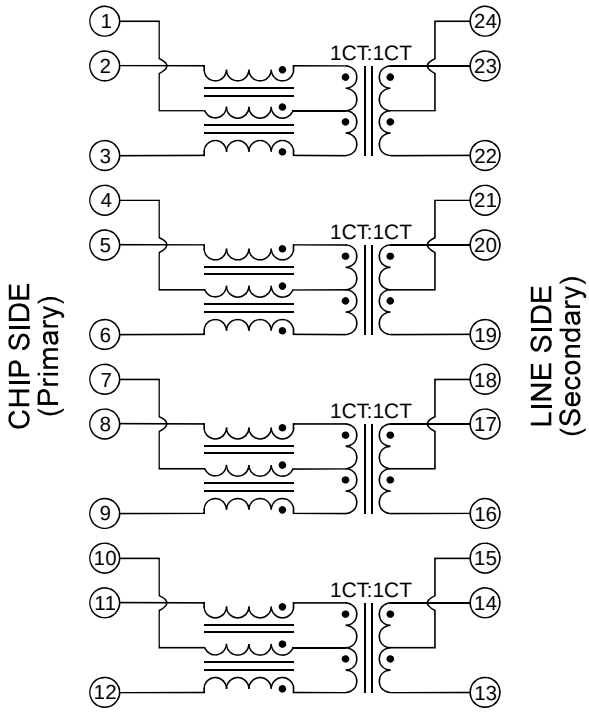

PACKAGING

824-00405R / 824-00437R

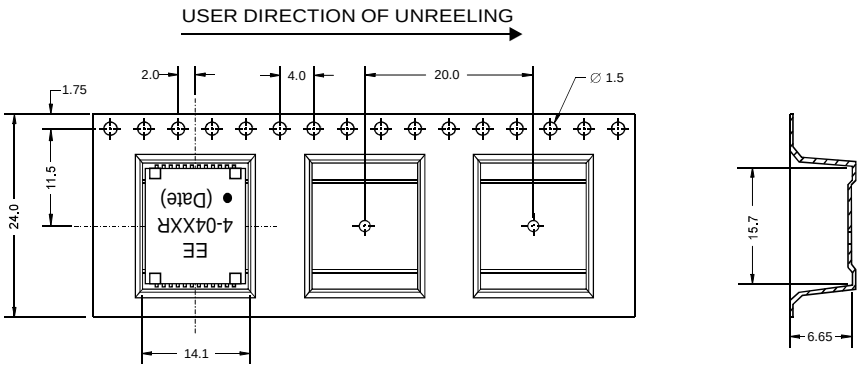

Weight (in gram) : 1.5 typ.

Tape & Reel : 450 / reel

FOR MORE INFORMATION, PLEASE CONTACT

HEADQUARTER
1/F., Harbour View 1, No.12 Science Park East Avenue,
Phase II, Hong Kong Science Park, Shatin, N.T.
Hong Kong
Tel: (852) 2954 3333 Fax: (852) 2954 3304
Email: eempl@eleceltek.com
Website: http://www.eleceltek.com / www.eemagnetic.com

Information herein is for reference only and subject to change without notice. It does not constitute any representation, warranty or commitment of the company in respect of the products in any aspect. All logos, brands and product names mentioned herein are trademarks or registered trademarks of their respective owners. The company does not assume any liability arising out of the application or use of any product or circuit described herein. Copyrights 2009, E & E Magnetic Products Limited.