REVISIONS			
REV.	DESCRIPTION	ECN NO.	DATE
01	FIRST RELEASE	N/A	06/28/10

PAGE 4 IS FOR PRODUCTION ONLY

PART NUMBER	PART DESCRIPTION
824-00404F	RoHS compliant per EU Directive 2002/95/EC(without exemption of solder content)

TITLE

TRANSFORMER, 100BASE-T, QUAD, SOIC, 40 PIN, EXT. TEMP.

WARNING !

ALL SHEETS OF THIS DOCUMENT ARE CONTROLLED DOCUMENTATION AND ARE NOT TO BE RELEASED OUTSIDE OF E&E OR ITS SUB-CONTRACTORS WITHOUTAUTHORIZATION.

UNLESS OTHERWISE SPECIFIED, DIMENSIONS ARE IN INCH/mm.

TOLERANCE ARE:

INCH	mm	ANGLE
.XXX ± .005	.XX ± .13	X.X ± 0.3
.XX ± .02	.X ± .5	X. ± 1.

APPROVALS		DATE
DRAWN BY	Y.L. YUNG	06/28/10
PROJ. ENG	D. YUNG	06/28/10
APPROVED BY	V. TSUI	06/28/10
Q.A.	C.M. TSUI	06/28/10

E & E Magnetic Products Ltd.

DRAWING NO./MODEL: 824-00404F

REV: 01

SCALE: DO NOT SCALE

PAGE 1 OF 4

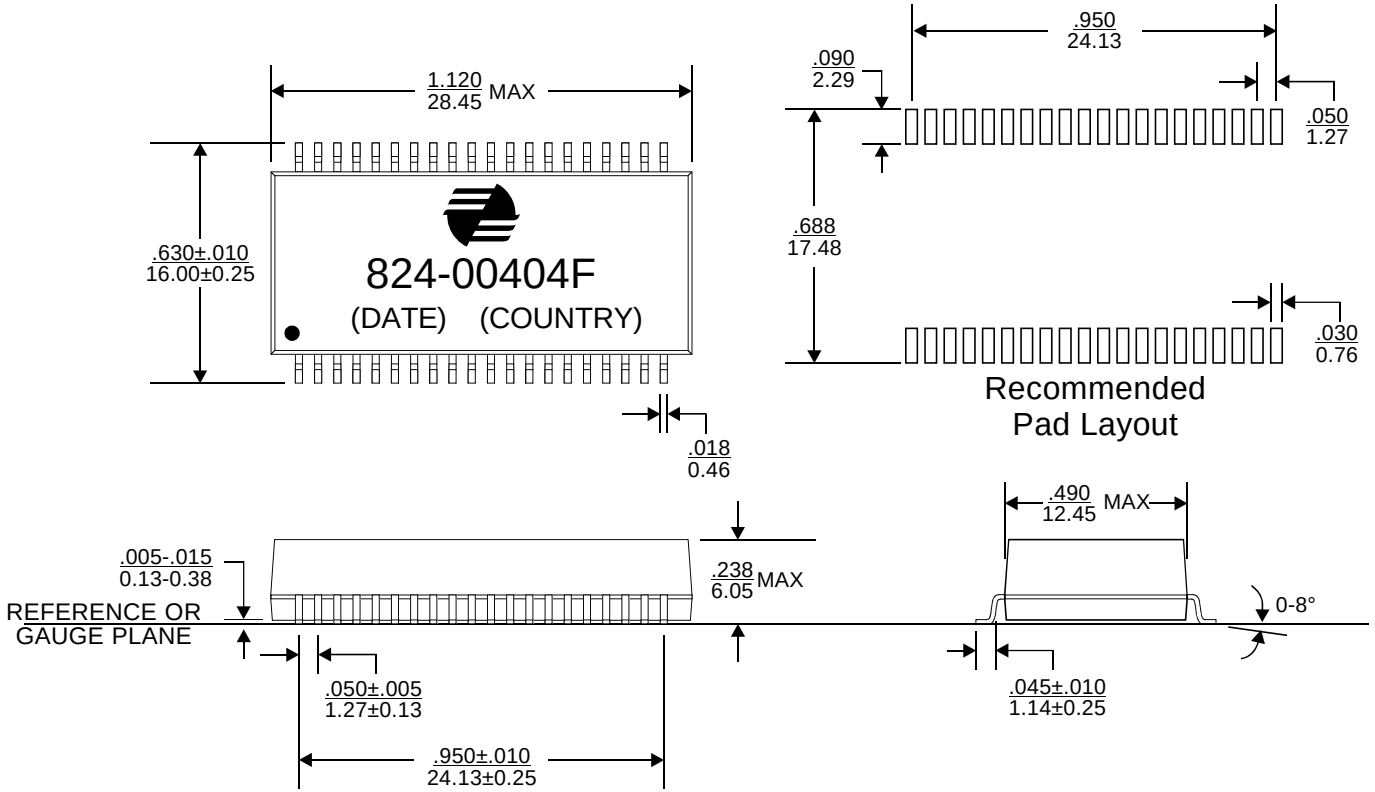

1. Dimensions are specified in $\frac{\text{inches}}{\text{mm}}$ with higher precedence in inches.
2. Unless otherwise specified, all tolerances are ± $\frac{.010}{0.25}$.
3. Coplanarity: $\frac{.004}{0.10}$ max.
4. "(DATE)" includes at least the manufacturing date code(in YYWW format) plus two character country code.
5. Dimensions are to be measured in accordance with JEDEC standard 95-1.

MECHANICAL OUTLINE

E & E Magnetic Products Ltd.

DRAWING NO./MODEL	REV
824-00404F	01

SCALE	PAGE	OF
DO NOT SCALE	2	4

LINE SIDE (Secondary)

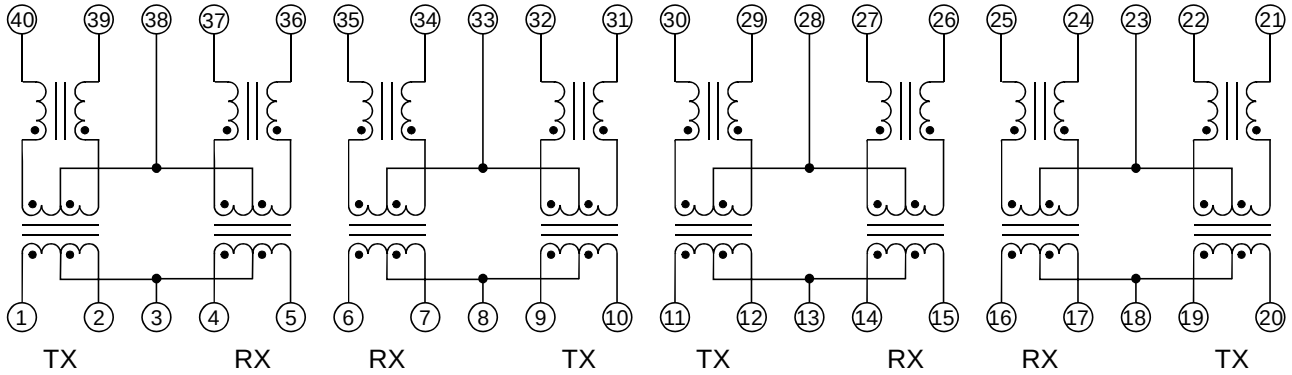

CHIP SIDE (Primary)

SCHEMATIC

ELECTRICAL SPECIFICATION @25°C:

PARAMETERS	UNIT	Tx-Side	Rx-Side
Turns Ratio (Primary):(Secondary)	-	1CT:1CT ± 2%	1CT:1CT ± 2%
Polarity (Primary):(Secondary)	-	Per Schematic	Per Schematic
Inductance, Ls (Primary) @100kHz, 0.1Vrms, 8mADC	uH	350 Min	350 Min
Insertion Loss @1-100MHz	dB	1.0 Max	1.0 Max
Return Loss @2-30MHz	dB	18 Min	18 Min
Return Loss @40MHz	dB	14.4 Min	14.4 Min
Return Loss @50MHz	dB	13.1 Min	13.1 Min
Return Loss @60-80MHz	dB	12 Min	12 Min
CMRR @1-100MHz	dB	30 Min	30 Min
CMRR @100-500MHz	dB	13 Min	13 Min
DM-CMRR @1-100MHz	dB	40 Min	40 Min
Crosstalk @1-100MHz (Tx<=>Rx)	dB	28 Min	
HIPOT (Primary):(Secondary)	Vrms	1500 Min	1500 Min

6. Operating temperature : -40°C to +85°C.

E & E Magnetic Products Ltd.

DRAWING NO./MODEL	REV
824-00404F	01

SCALE	PAGE	OF
DO NOT SCALE	3	4