Holder / No. 813

Not for new designs - refer to No. 862



Horizontal / 2-Pin

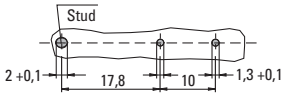

Holes in the printed circuit board: 1,3 +0,1

Cap / No. 815



For 5x20mm Fuses

Cap / No. 816



For 6.3x32mm Fuses

PC Mount, Shocksafe
5x20mm / 6.3x32mm Fuses

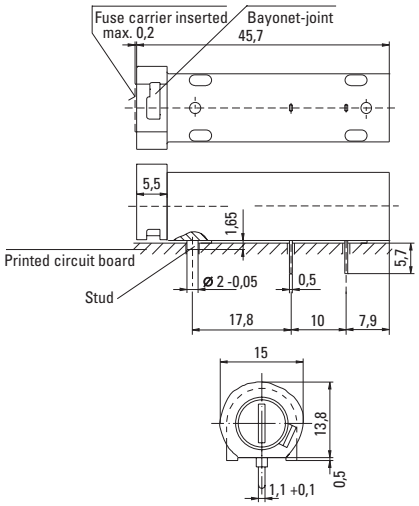

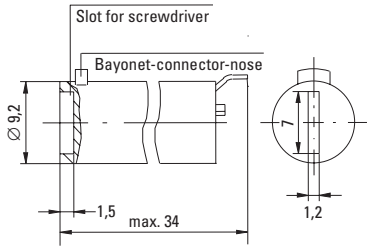

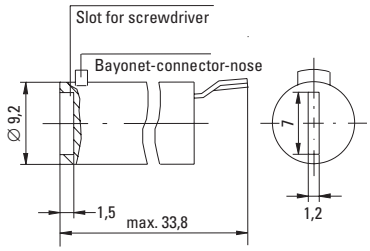

Order Information

Packaging
Bulk (100 pcs.)

Order Numbers

Holder	No. 813 0000 000
Cap, 5x20mm	No. 815 0000 000
Cap, 6.3x32mm	No. 816 0000 000

RoHS

Specifications

Standard
IEC 60127-6
UL 512
CSA C22.2. No.39

Approvals

Mounting
(2) Solder pins 0.5mm x 1.1mm and plastic stud

Protection Class & Category
IP 40 (IEC 60529)
PC2 (IEC 60127-6)

Materials

Holder/Cap:	Black Thermoplastic Polyamide PA 6.6, UL94 V-0
Metal Parts:	Copper alloy, corrosion protected
Terminals:	Solderable, tinned

Electrical Data (23°C)

Rated Voltage:	250V
Rated Current:	6.3A (VDE/SEMKO) 16A (UL/CSA)
Rated Power:	1.6W (813+815 - VDE/SEMKO) 2.5W (813+816 - VDE/SEMKO)

Operating Temperature
-25°C to +70°C (consider de-rating)

Climatic Test
-25°C/+70°C/21 days (IEC 60068-2-1...3)

Stock Conditions
+10°C to +60°C
relative humidity ≤ 75% yearly average,
without dew, maximum value for 30 days - 95%

Vibration Resistance
24 cycles at 15 min. each (IEC 60068-2-6)
10 - 60Hz at 0.75mm amplitude
60 - 2000Hz at 10g acceleration

Contact Resistance
≤ 5mΩ

Dielectric Strength
> 1.5 kV

Impulse Voltage
4 kV, 50 Hz, 1 min., dry

Insulation Resistance
> 10^3 MΩ (500 VDC, 1 min.)

Solderability
235°C, 3 sec. (Wave)
350°C, 1 sec. (Soldering Iron)

Soldering Heat Resistance
260°C, 5 sec. (IEC 60068-2-20)

Minimum Cross Section
Conducting path - 0.2mm^2

Marking
813, 250V, Approvals

Unit Weight
5.8g (Holder) / 2.5g (Cap)

Note: 1.00 means the number one with two decimal places. 1,000 means the number one thousand.

WICKMANN

In our continuing strategy to deliver unparalleled circuit protection solutions, technical expertise and application leadership, we proudly introduce the WICKMANN Group and its products to the Littelfuse portfolio.