- **Very Low Power Consumption**
- **Typical Supply Current . . . 200 μA (Per Amplifier)**
- **Wide Common-Mode and Differential Voltage Ranges**
- **Low Input Bias and Offset Currents**
- **Common-Mode Input Voltage Range Includes V_{CC+}**
- **Output Short-Circuit Protection**
- **High Input Impedance . . . JFET-Input Stage**
- **Internal Frequency Compensation**
- **Latch-Up-Free Operation**
- **High Slew Rate . . . 3.5 V/μs Typ**

TL061, TL061A . . . D, P, OR PS PACKAGE
TL061B . . . P PACKAGE
(TOP VIEW)

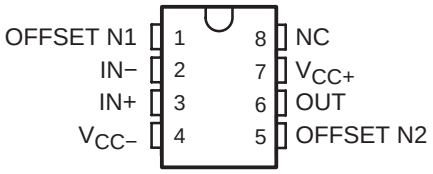

TL062 . . . D, JG, P, PS, OR PW PACKAGE
TL062A . . . D, P, OR PS PACKAGE
TL062B . . . D OR P PACKAGE
(TOP VIEW)

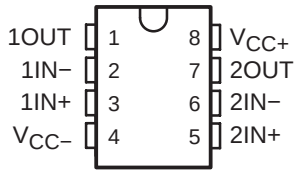

TL064 . . . D, J, N, NS, PW, OR W PACKAGE
TL064A, TL064B . . . D OR N PACKAGE
(TOP VIEW)

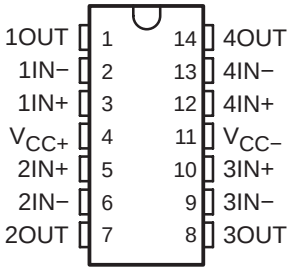

NC − No internal connection

TL062 . . . FK PACKAGE
(TOP VIEW)

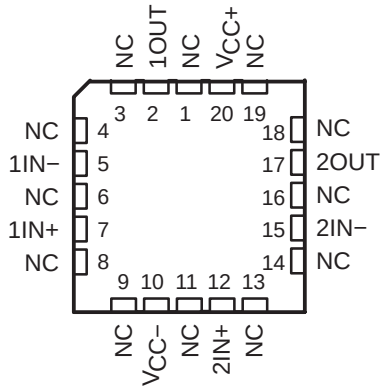

TL064 . . . FK PACKAGE
(TOP VIEW)

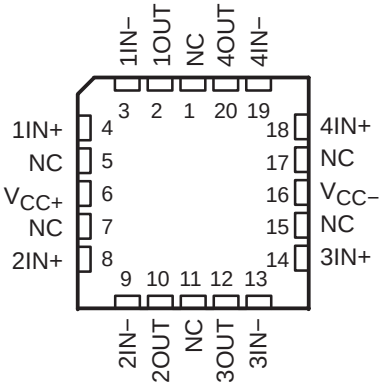

description/ordering information

The JFET-input operational amplifiers of the TL06_ series are designed as low-power versions of the TL08_ series amplifiers. They feature high input impedance, wide bandwidth, high slew rate, and low input offset and input bias currents. The TL06_ series features the same terminal assignments as the TL07_ and TL08_ series. Each of these JFET-input operational amplifiers incorporates well-matched, high-voltage JFET and bipolar transistors in an integrated circuit.

The C-suffix devices are characterized for operation from 0°C to 70°C. The I-suffix devices are characterized for operation from −40°C to 85°C, and the M-suffix devices are characterized for operation over the full military temperature range of −55°C to 125°C.

Please be aware that an important notice concerning availability, standard warranty, and use in critical applications of Texas Instruments semiconductor products and disclaimers thereto appears at the end of this data sheet.

PRODUCTION DATA information is current as of publication date. Products conform to specifications per the terms of Texas Instruments standard warranty. Production processing does not necessarily include testing of all parameters.

Copyright © 2004, Texas Instruments Incorporated
On products compliant to MIL-PRF-38535, all parameters are tested unless otherwise noted. On all other products, production processing does not necessarily include testing of all parameters.

description/ordering information (continued)

ORDERING INFORMATION

T_A	V_{IO}MAX AT 25°C	PACKAGE†		ORDERABLE PART NUMBER	TOP-SIDE MARKING
0°C to 70°C	15 mV	PDIP (P)	Tube of 50	TL061CP	TL061CP
				TL062CP	TL062CP
		PDIP (N)	Tube of 25	TL064CN	TL064CN
		SOIC (D)	Tube of 75	TL061CD	TL061C
			Reel of 2500	TL061CDR	
			Tube of 75	TL062CD	TL062C
			Reel of 2500	TL062CDR	
			Tube of 50	TL064CD	TL064C
			Reel of 2500	TL064CDR	
		SOP (PS)	Reel of 2000	TL061CPSR	T061
				TL062CPSR	T062
		SOP (NS)	Reel of 2000	TL064CNSR	TL064
		TSSOP (PW)	Tube of 150	TL062CPW	T062
			Reel of 2000	TL062CPWR	
			Tube of 90	TL064CPW	T064
			Reel of 2000	TL064CPWR	
	6 mV	PDIP (P)	Tube of 50	TL061ACP	TL061ACP
				TL062ACP	TL062ACP
		PDIP (N)	Tube of 25	TL064ACN	TL064ACN
		SOIC (D)	Tube of 75	TL061ACD	061AC
			Reel of 2500	TL061ACDR	
			Tube of 75	TL062ACD	062AC
			Reel of 2500	TL062ACDR	
			Tube of 50	TL064ACD	TL064AC
			Reel of 2500	TL064ACDR	
		SOP (PS)	Reel of 2000	TL061ACPSR	T061A
				TL062ACPSR	T062A
	3 mV	PDIP (P)	Tube of 50	TL061BCP	TL061BCP
				TL062BCP	TL062BCP
		PDIP (N)	Tube of 25	TL064BCN	TL064BCN
		SOIC (D)	Tube of 75	TL062BCD	062BC
			Reel of 2500	TL062BCDR	
			Tube of 50	TL064BCD	TL064BC
			Reel of 2500	TL064BCDR	

† Package drawings, standard packing quantities, thermal data, symbolization, and PCB design guidelines are available at www.ti.com/sc/package.

description/ordering information (continued)

ORDERING INFORMATION (continued)

T_A	V_{IO}MAX AT 25°C	PACKAGE†		ORDERABLE PART NUMBER	TOP-SIDE MARKING
−40°C to 85°C	6 mV	PDIP (P)	Tube of 50	TL061IP	TL061IP
				TL062IP	TL062IP
		PDIP (N)	Tube of 25	TL064IN	TL064IN
		SOIC (D)	Tube of 75	TL061ID	TL061I
			Reel of 2000	TL061IDR	
			Tube of 75	TL062ID	TL062I
			Reel of 2000	TL062IDR	
			Tube of 50	TL064ID	TL064I
			Reel of 2500	TL064IDR	
		TSSOP (PW)	Reel of 2000	TL062IPWR	TL062I
−55°C to 125°C	6 mV	CDIP (JG)	Tube of 50	TL062MJG	TL062MJG
		LCCC (FK)	Tube of 55	TL062MFK	TL062MFK
	9 mV	CDIP (J)	Tube of 25	TL064MJ	TL064MJ
		CFP (W)	Tube of 150	TL064MW	TL064MW
		LCCC (FK)	Tube of 55	TL064MFK	TL064MFK

† Package drawings, standard packing quantities, thermal data, symbolization, and PCB design guidelines are available at www.ti.com/sc/package.

symbol (each amplifier)

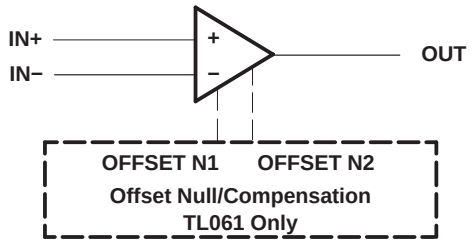

schematic (each amplifier)

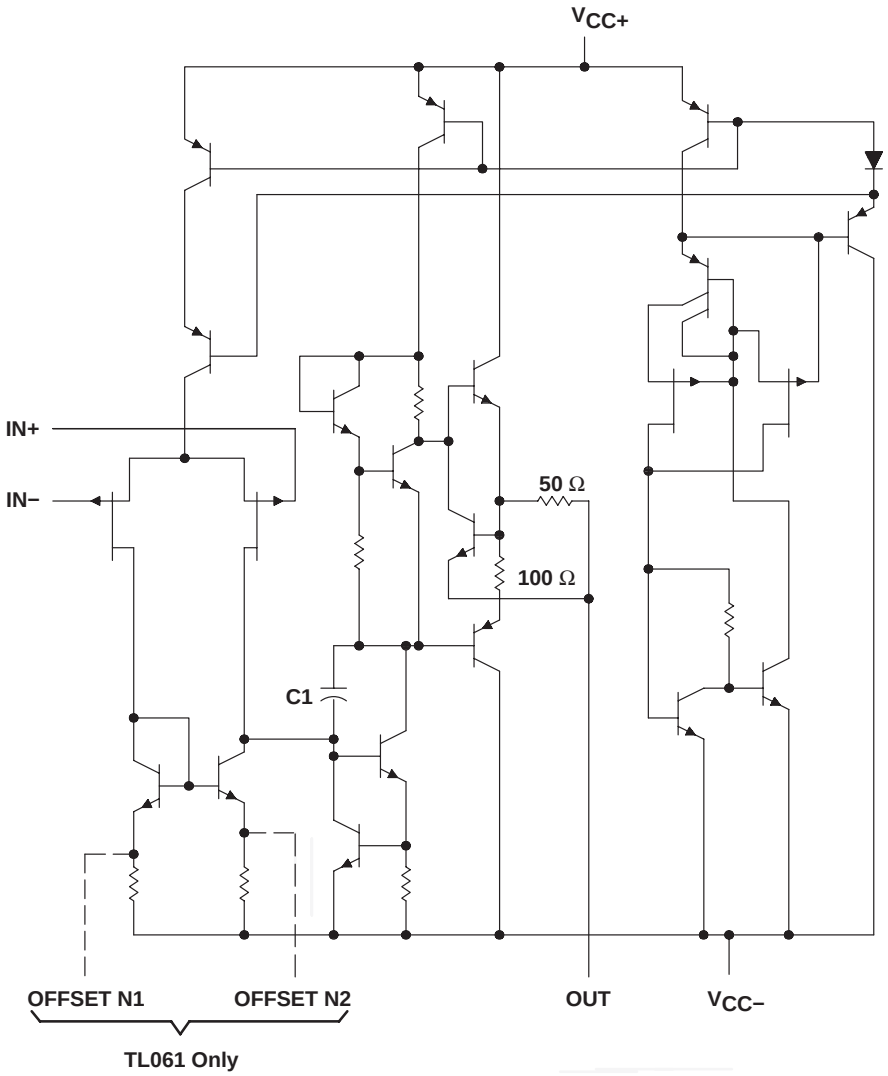

C1 = 10 pF on TL061, TL062, and TL064
Component values shown are nominal.

absolute maximum ratings over operating free-air temperature range (unless otherwise noted)†

		TL06_C TL06_AC TL06_BC	TL06_I	TL06_M	UNIT
Supply voltage, V_{CC+} (see Note 1)		18	18	18	V
Supply voltage, V_{CC-} (see Note 1)		−18	−18	−18	V
Differential input voltage, V_{ID} (see Note 2)		±30	±30	±30	V
Input voltage, V_I (see Notes 1 and 3)		±15	±15	±15	V
Duration of output short circuit (see Note 4)		Unlimited	Unlimited	Unlimited	
Package thermal impedance, θ_{JA} (see Notes 5 and 6)	D (8-pin) package	97	97		°C/W
	D (14-pin) package	86	86		
	N package	80	80		
	NS package	76	76		
	P package	85	85		
	PS package	95	95		
	PW (8-pin) package	149	149		
	PW (14-pin) package	113	113		
Package thermal impedance, θ_{JC} (see Notes 7 and 8)	FK package			5.61	°C/W
	J package			15.05	
	JG package			14.5	
	W package			14.65	
Operating virtual junction temperature, T_J		150	150	150	°C
Case temperature for 60 seconds	FK package			260	°C
Lead temperature 1,6 mm (1/16 inch) from case for 60 seconds	J, JG, U, or W package			300	°C
Lead temperature 1,6 mm (1/6 inch) from case for 10 seconds	D, N, NS, P, PS, or PW package	260	260		°C
Storage temperature range, T_{stg}		−65 to 150	−65 to 150	−65 to 150	°C

† Stresses beyond those listed under “absolute maximum ratings” may cause permanent damage to the device. These are stress ratings only, and functional operation of the device at these or any other conditions beyond those indicated under “recommended operating conditions” is not implied. Exposure to absolute-maximum-rated conditions for extended periods may affect device reliability.

NOTES:
1. All voltage values except differential voltages are with respect to the midpoint between V_{CC+} and V_{CC-}.
2. Differential voltages are at IN+ with respect to IN−.
3. The magnitude of the input voltage should never exceed the magnitude of the supply voltage or 15 V, whichever is less.
4. The output may be shorted to ground or to either supply. Temperature and/or supply voltages must be limited to ensure that the dissipation rating is not exceeded.
5. Maximum power dissipation is a function of $T_J(max)$, θ_{JA}, and T_A. The maximum allowable power dissipation at any allowable ambient temperature is $P_D = (T_J(max) - T_A)/\theta_{JA}$. Operating at the absolute maximum T_J of 150°C can affect reliability.
6. The package thermal impedance is calculated in accordance with JESD 51-7.
7. Maximum power dissipation is a function of $T_J(max)$, θ_{JC}, and T_C. The maximum allowable power dissipation at any allowable case temperature is $P_D = (T_J(max) - T_C)/\theta_{JC}$. Operating at the absolute maximum T_J of 150°C can affect reliability.
8. The package thermal impedance is calculated in accordance with MIL-STD-883.

electrical characteristics, $V_{CC\pm}$ = ±15 V (unless otherwise noted)

PARAMETER		TEST CONDITIONS†		TL061C TL062C TL064C			TL061AC TL062AC TL064AC			UNIT
				MIN	TYP	MAX	MIN	TYP	MAX	
V_{IO}	Input offset voltage	V_O = 0, R_S = 50 Ω	T_A = 25°C		3	15		3	6	mV
			T_A = Full range			20			7.5	
$\alpha_{V_{IO}}$	Temperature coefficient of input offset voltage	V_O = 0, R_S = 50 Ω, T_A = Full range			10			10		µV/°C
I_{IO}	Input offset current	V_O = 0	T_A = 25°C		5	200		5	100	pA
			T_A = Full range			5			3	nA
I_{IB}	Input bias current‡	V_O = 0	T_A = 25°C		30	400		30	200	pA
			T_A = Full range			10			7	nA
V_{ICR}	Common-mode input voltage range	T_A = 25°C		±11	−12 to 15		±11	−12 to 15		V
V_{OM}	Maximum peak output voltage swing	R_L = 10 kΩ,	T_A = 25°C	±10	±13.5		±10	±13.5		V
		R_L ≥ 10 kΩ,	T_A = Full range	±10			±10			
A_{VD}	Large-signal differential voltage amplification	V_O = ± 10 V, R_L ≥ 10 kΩ	T_A = 25°C	3	6		4	6		V/mV
			T_A = Full range	3			4			
B_1	Unity-gain bandwidth	R_L = 10 kΩ,	T_A = 25°C		1			1		MHz
r_i	Input resistance	T_A = 25°C			10^{12}			10^{12}		Ω
CMRR	Common-mode rejection ratio	V_{IC} = V_{ICR}min, V_O = 0, R_S = 50 Ω, T_A = 25°C		70	86		80	86		dB
k_{SVR}	Supply-voltage rejection ratio ($\Delta V_{CC\pm}/\Delta V_{IO}$)	V_{CC} = ± 9 V to ± 15 V, V_O = 0, R_S = 50 Ω, T_A = 25°C		70	95		80	95		dB
P_D	Total power dissipation (each amplifier)	V_O = 0, No load	T_A = 25°C,		6	7.5		6	7.5	mW
I_{CC}	Supply current (each amplifier)	V_O = 0, No load	T_A = 25°C,		200	250		200	250	µA
V_{O1}/V_{O2}	Crosstalk attenuation	A_{VD} = 100,	T_A = 25°C		120			120		dB

† All characteristics are measured under open-loop conditions with zero common-mode input voltage unless otherwise specified. Full range for T_A is 0°C to 70°C for TL06_C, TL06_AC, and TL06_BC and −40°C to 85°C for TL06_I.

‡ Input bias currents of an FET-input operational amplifier are normal junction reverse currents, which are temperature sensitive, as shown in Figure 15. Pulse techniques are used to maintain the junction temperature as close to the ambient temperature as possible.

electrical characteristics, $V_{CC\pm}$ = ±15 V (unless otherwise noted)

PARAMETER		TEST CONDITIONS†		TL061BC TL062BC TL064BC			TL061I TL062I TL064I			UNIT
				MIN	TYP	MAX	MIN	TYP	MAX	
V_{IO}	Input offset voltage	V_O = 0, R_S = 50 Ω	T_A = 25°C		2	3		3	6	mV
			T_A = Full range			5			9	
$\alpha_{V_{IO}}$	Temperature coefficient of input offset voltage	V_O = 0, R_S = 50 Ω, T_A = Full range			10			10		µV/°C
I_{IO}	Input offset current	V_O = 0	T_A = 25°C		5	100		5	100	pA
			T_A = Full range			3			10	nA
I_{IB}	Input bias current‡	V_O = 0	T_A = 25°C		30	200		30	200	pA
			T_A = Full range			7			20	nA
V_{ICR}	Common-mode input voltage range	T_A = 25°C		±11	−12 to 15		±11	−12 to 15		V
V_{OM}	Maximum peak output voltage swing	R_L = 10 kΩ,	T_A = 25°C	±10	±13.5		±10	±13.5		V
		R_L ≥ 10 kΩ,	T_A = Full range	±10			±10			
A_{VD}	Large-signal differential voltage amplification	V_O = ± 10 V, R_L ≥ 10 kΩ	T_A = 25°C	4	6		4	6		V/mV
			T_A = Full range	4			4			
B_1	Unity-gain bandwidth	R_L = 10 kΩ,	T_A = 25°C		1			1		MHz
r_i	Input resistance	T_A = 25°C			10^{12}			10^{12}		Ω
CMRR	Common-mode rejection ratio	V_{IC} = V_{ICR}min, V_O = 0, R_S = 50 Ω, T_A = 25°C		80	86		80	86		dB
k_{SVR}	Supply-voltage rejection ratio ($\Delta V_{CC\pm}/\Delta V_{IO}$)	V_{CC} = ± 9 V to ± 15 V, V_O = 0, R_S = 50 Ω, T_A = 25°C		80	95		80	95		dB
P_D	Total power dissipation (each amplifier)	V_O = 0, No load	T_A = 25°C,		6	7.5		6	7.5	mW
I_{CC}	Supply current (each amplifier)	V_O = 0, No load	T_A = 25°C,		200	250		200	250	µA
V_{O1}/V_{O2}	Crosstalk attenuation	A_{VD} = 100,	T_A = 25°C		120			120		dB

† All characteristics are measured under open-loop conditions with zero common-mode input voltage, unless otherwise specified. Full range for T_A is 0°C to 70°C for TL06_C, TL06_AC, and TL06_BC and −40°C to 85°C for TL06_I.

‡ Input bias currents of an FET-input operational amplifier are normal junction reverse currents, which are temperature sensitive, as shown in Figure 15. Pulse techniques are used to maintain the junction temperature as close to the ambient temperature as possible.

electrical characteristics, $V_{CC\pm}$ = ±15 V (unless otherwise noted)

PARAMETER		TEST CONDITIONS†		TL061M TL062M			TL064M			UNIT
				MIN	TYP	MAX	MIN	TYP	MAX	
V_{IO}	Input offset voltage	V_O = 0, R_S = 50 Ω	T_A = 25°C		3	6		3	9	mV
			T_A = −55°C to 125°C			9			15	
$\alpha_{V_{IO}}$	Temperature coefficient of input offset voltage	V_O = 0, R_S = 50 Ω, T_A = −55°C to 125°C			10			10		µV/°C
I_{IO}	Input offset current	V_O = 0	T_A = 25°C		5	100		5	100	pA
			T_A = −55°C			20*			20*	nA
			T_A = 125°C			20			20	
I_{IB}	Input bias current‡	V_O = 0	T_A = 25°C		30	200		30	200	pA
			T_A = −55°C			50*			50*	nA
			T_A = 125°C			50			50	
V_{ICR}	Common-mode input voltage range	T_A = 25°C		±11.5	−12 to 15		±11.5	−12 to 15		V
V_{OM}	Maximum peak output voltage swing	R_L = 10 kΩ,	T_A = 25°C	±10	±13.5		±10	±13.5		V
		R_L ≥ 10 kΩ,	T_A = −55°C to 125°C	±10			±10			
A_{VD}	Large-signal differential voltage amplification	V_O = ±10 V, R_L ≥ 10 kΩ	T_A = 25°C	4	6		4	6		V/mV
			T_A = −55°C to 125°C	4			4			
B_1	Unity-gain bandwidth	R_L = 10 kΩ,	T_A = 25°C							MHz
r_i	Input resistance	T_A = 25°C			10^{12}			10^{12}		Ω
CMRR	Common-mode rejection ratio	V_{IC} = V_{ICR}min, V_O = 0, R_S = 50 Ω, T_A = 25°C		80	86		80	86		dB
k_{SVR}	Supply-voltage rejection ratio ($\Delta V_{CC\pm}/\Delta V_{IO}$)	V_{CC} = ±9 V to ±15 V, V_O = 0, R_S = 50 Ω, T_A = 25°C		80	95		80	95		dB
P_D	Total power dissipation (each amplifier)	V_O = 0, No load	T_A = 25°C,		6	7.5		6	7.5	mW
I_{CC}	Supply current (each amplifier)	V_O = 0, No load	T_A = 25°C,		200	250		200	250	µA
V_{O1}/V_{O2}	Crosstalk attenuation	A_{VD} = 100,	T_A = 25°C		120			120		dB

* This parameter is not production tested.
† All characteristics are measured under open-loop conditions, with zero common-mode voltage, unless otherwise specified.
‡ Input bias currents of an FET-input operational amplifier are normal junction reverse currents, which are temperature sensitive, as shown in Figure 15. Pulse techniques are used to maintain the junction temperature as close to the ambient temperature as possible.

operating characteristics, $V_{CC\pm}$ = ±15 V, T_A = 25°C

PARAMETER		TEST CONDITIONS		MIN	TYP	MAX	UNIT
SR	Slew rate at unity gain (see Note 5)	V_I = 10 V, R_L = 10 kΩ,	C_L = 100 pF, See Figure 1	1.5	3.5		V/µs
t_r	Rise time	V_I = 20 mV, C_L = 100 pF,	R_L = 10 kΩ, See Figure 1		0.2		µs
	Overshoot factor				10%		
V_n	Equivalent input noise voltage	R_S = 20 Ω,	f = 1 kHz		42		nV/√Hz

NOTE 5: Slew rate at −55°C to 125°C is 0.7 V/µs min.

PARAMETER MEASUREMENT INFORMATION

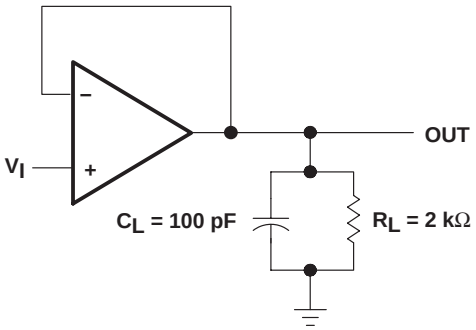

Figure 1. Unity-Gain Amplifier

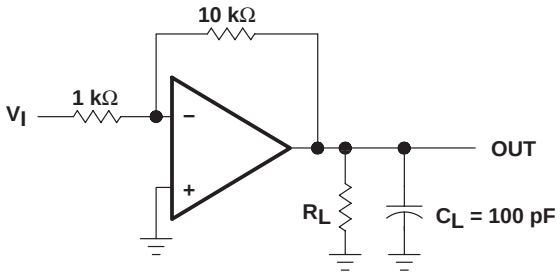

Figure 2. Gain-of-10 Inverting Amplifier

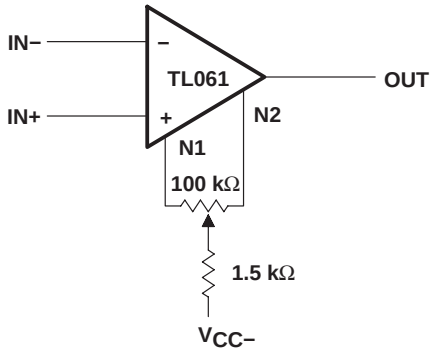

Figure 3. Input Offset-Voltage Null Circuit

TYPICAL CHARACTERISTICS

Table of Graphs

	FIGURE
Maximum peak output voltage vs Supply voltage	4
Maximum peak output voltage vs Free-air temperature	5
Maximum peak output voltage vs Load resistance	6
Maximum peak output voltage vs Frequency	7
Differential voltage amplification vs Free-air temperature	8
Large-signal differential voltage amplification vs Frequency	9
Phase shift vs Frequency	9
Supply current vs Supply voltage	10
Supply current vs Free-air temperature	11
Total power dissipation vs Free-air temperature	12
Common-mode rejection ratio vs Free-air temperature	13
Normalized unity-gain bandwidth vs Free-air temperature	14
Normalized slew rate vs Free-air temperature	14
Normalized phase shift vs Free-air temperature	14
Input bias current vs Free-air temperature	15
Voltage-follower large-signal pulse response vs Time	16
Output voltage vs Elapsed time	17
Equivalent input noise voltage vs Frequency	18

TYPICAL CHARACTERISTICS†

MAXIMUM PEAK OUTPUT VOLTAGE vs SUPPLY VOLTAGE

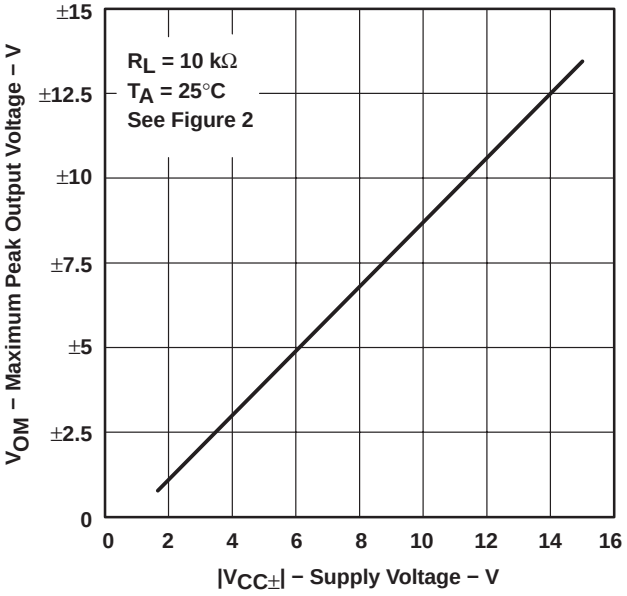

Figure 4

MAXIMUM PEAK OUTPUT VOLTAGE vs FREE-AIR TEMPERATURE

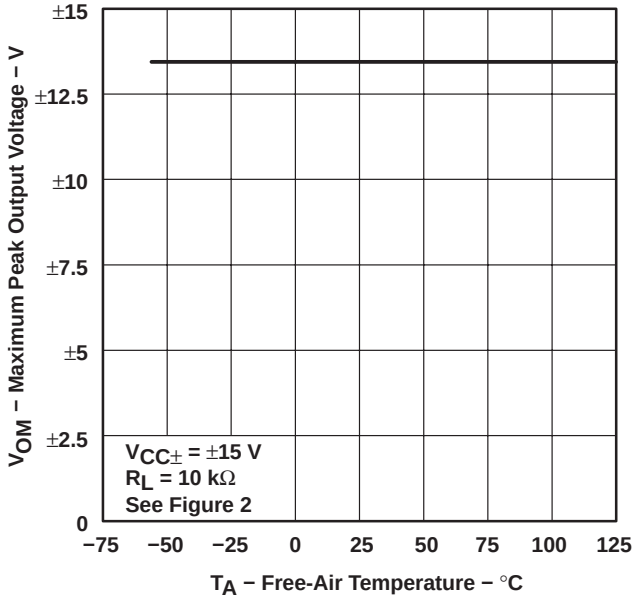

Figure 5

MAXIMUM PEAK OUTPUT VOLTAGE vs LOAD RESISTANCE

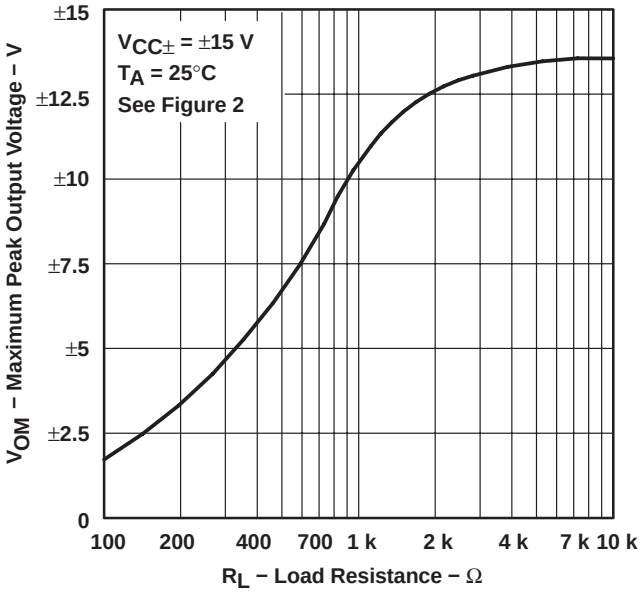

Figure 6

MAXIMUM PEAK OUTPUT VOLTAGE vs FREQUENCY

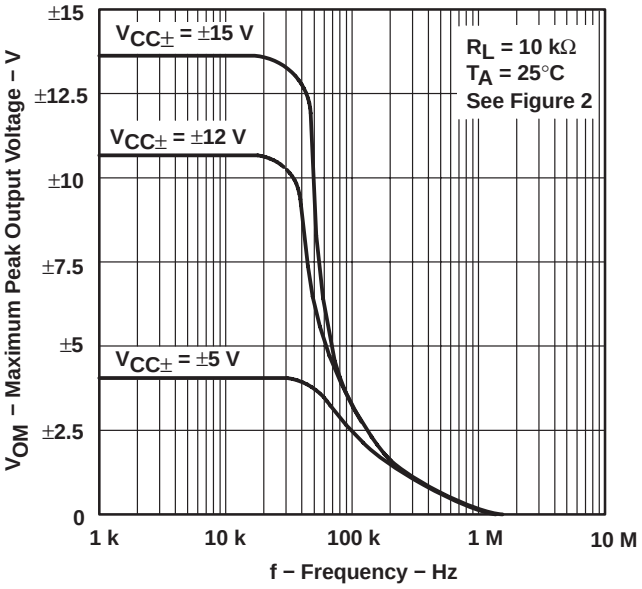

Figure 7

† Data at high and low temperatures are applicable only within the specified operating free-air temperature ranges of the various devices.

TYPICAL CHARACTERISTICS†

DIFFERENTIAL VOLTAGE AMPLIFICATION vs FREE-AIR TEMPERATURE

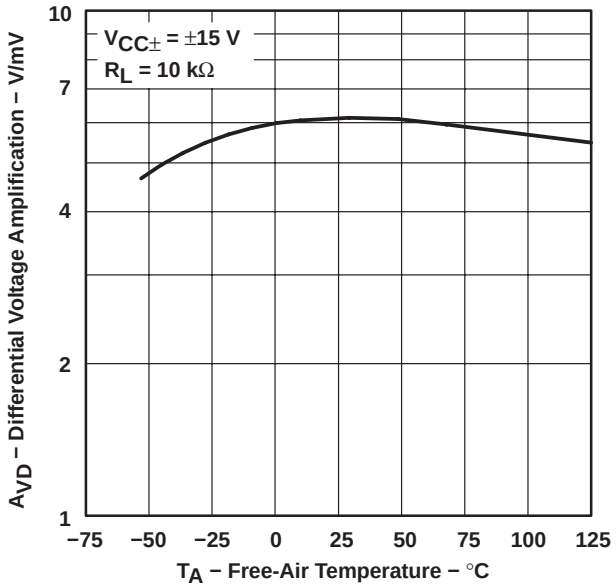

Figure 8

LARGE-SIGNAL DIFFERENTIAL VOLTAGE AMPLIFICATION AND PHASE SHIFT vs FREQUENCY

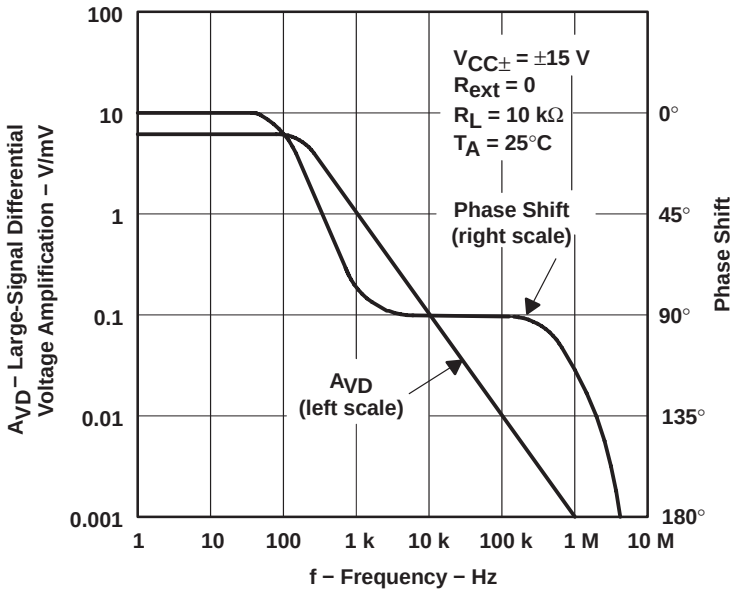

Figure 9

† Data at high and low temperatures are applicable only within the specified operating free-air temperature ranges of the various devices.

TYPICAL CHARACTERISTICS†

SUPPLY CURRENT vs SUPPLY VOLTAGE

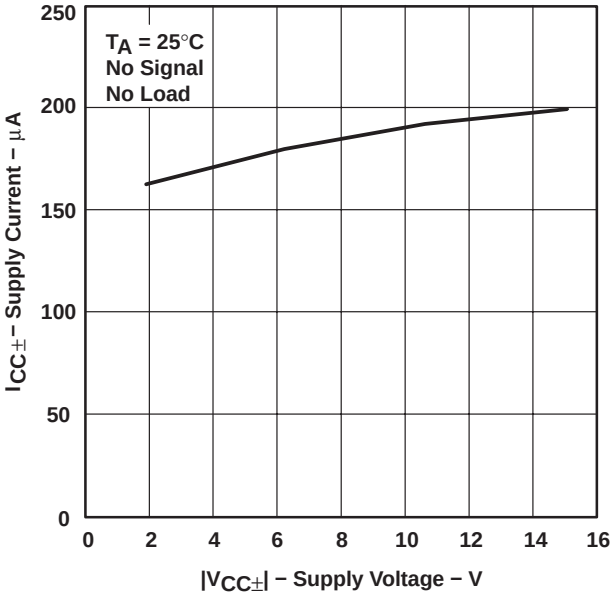

Figure 10

SUPPLY CURRENT vs FREE-AIR TEMPERATURE

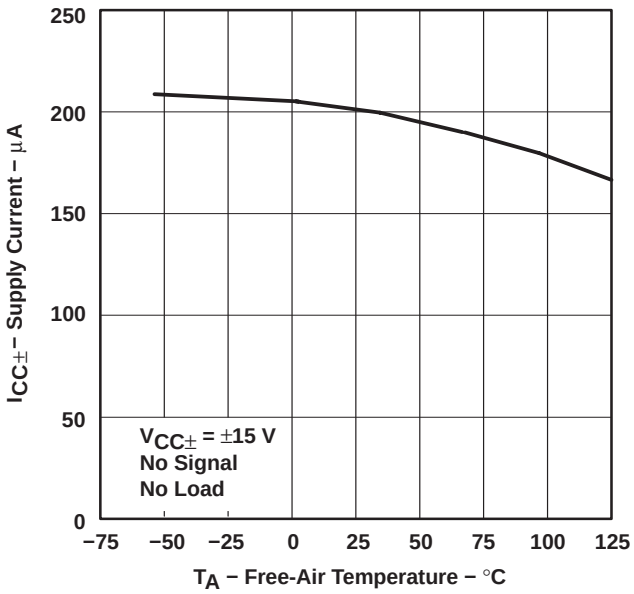

Figure 11

TOTAL POWER DISSIPATION vs FREE-AIR TEMPERATURE

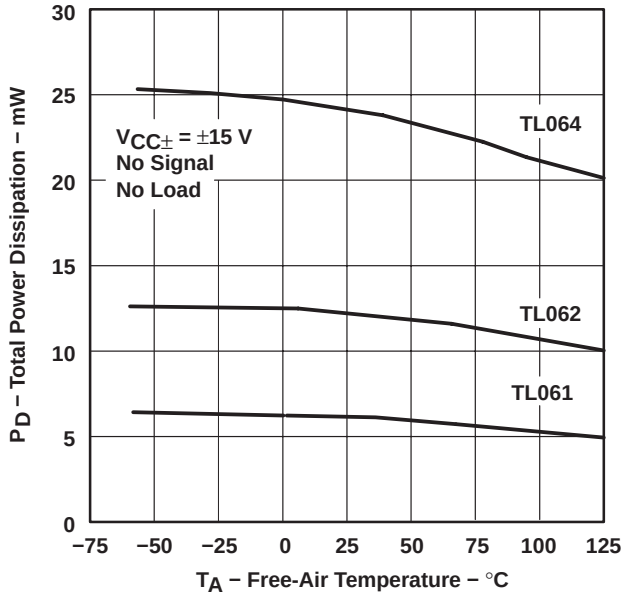

Figure 12

ALL EXCEPT TL06_C COMMON-MODE REJECTION RATIO vs FREE-AIR TEMPERATURE

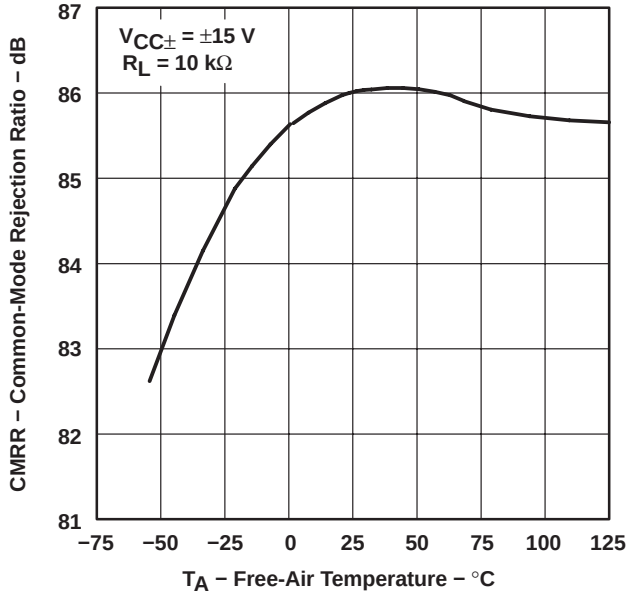

Figure 13

† Data at high and low temperatures are applicable only within the specified operating free-air temperature ranges of the various devices.

TYPICAL CHARACTERISTICS

NORMALIZED UNITY-GAIN BANDWIDTH, SLEW RATE, AND PHASE SHIFT vs FREE-AIR TEMPERATURE

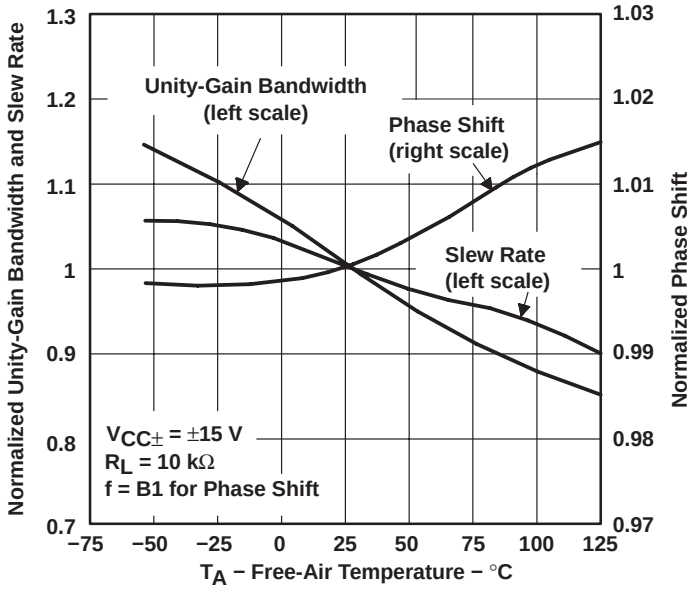

Figure 14

INPUT BIAS CURRENT vs FREE-AIR TEMPERATURE

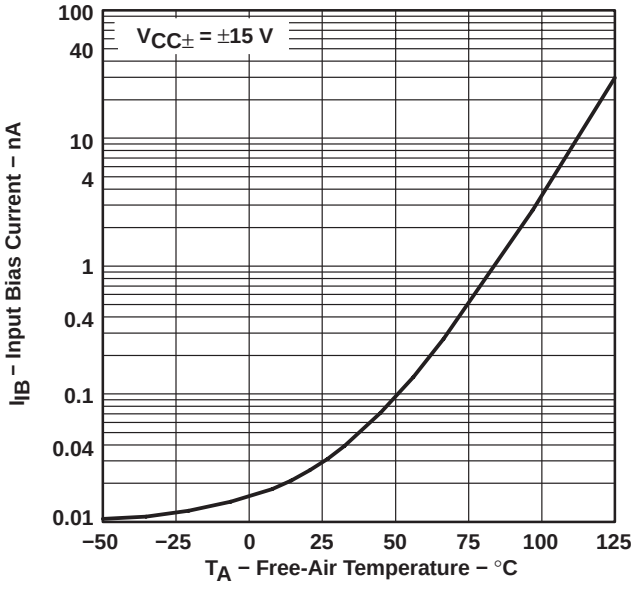

Figure 15

VOLTAGE-FOLLOWER LARGE-SIGNAL PULSE RESPONSE vs TIME

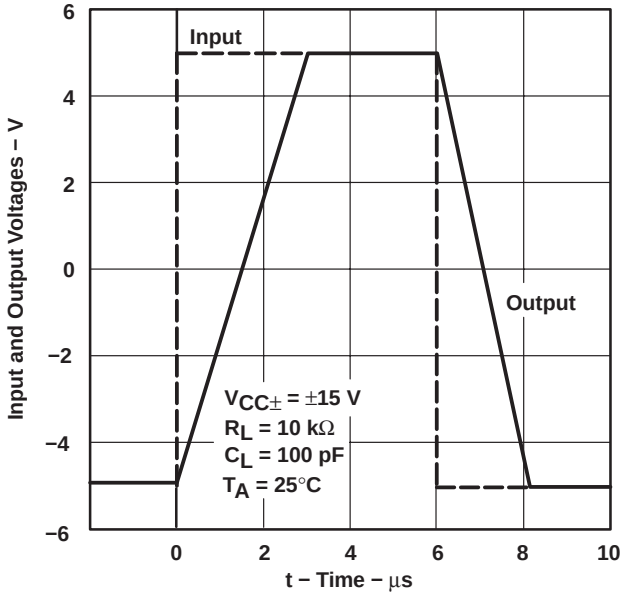

Figure 16

TYPICAL CHARACTERISTICS

OUTPUT VOLTAGE vs ELAPSED TIME

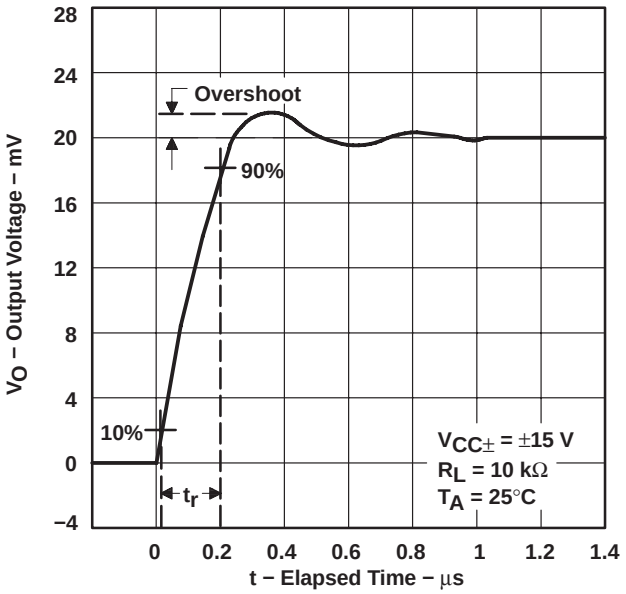

Figure 17

EQUIVALENT INPUT NOISE VOLTAGE vs FREQUENCY

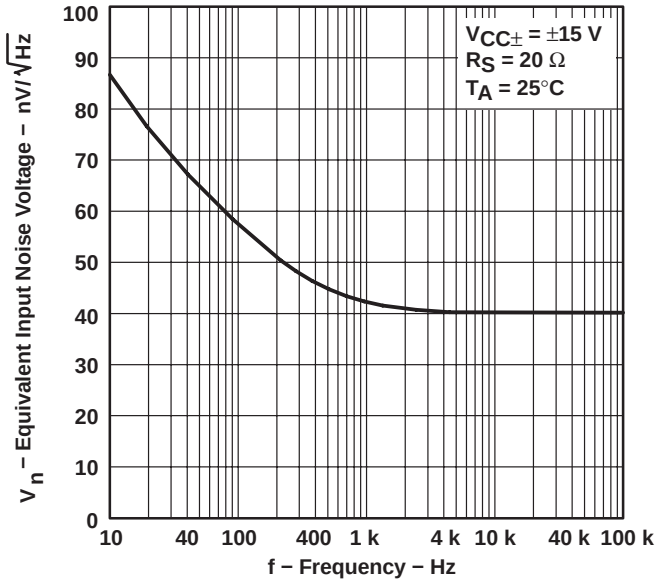

Figure 18

APPLICATION INFORMATION

Table of Application Diagrams

APPLICATION DIAGRAM	PART NUMBER	FIGURE
Instrumentation amplifier	TL064	19
0.5-Hz square-wave oscillator	TL061	20
High-Q notch filter	TL061	21
Audio-distribution amplifier	TL064	22
Low-level light detector preamplifier	TL061	23
AC amplifier	TL061	24
Microphone preamplifier with tone control	TL061	25
Instrumentation amplifier	TL062	26
IC preamplifier	TL062	27

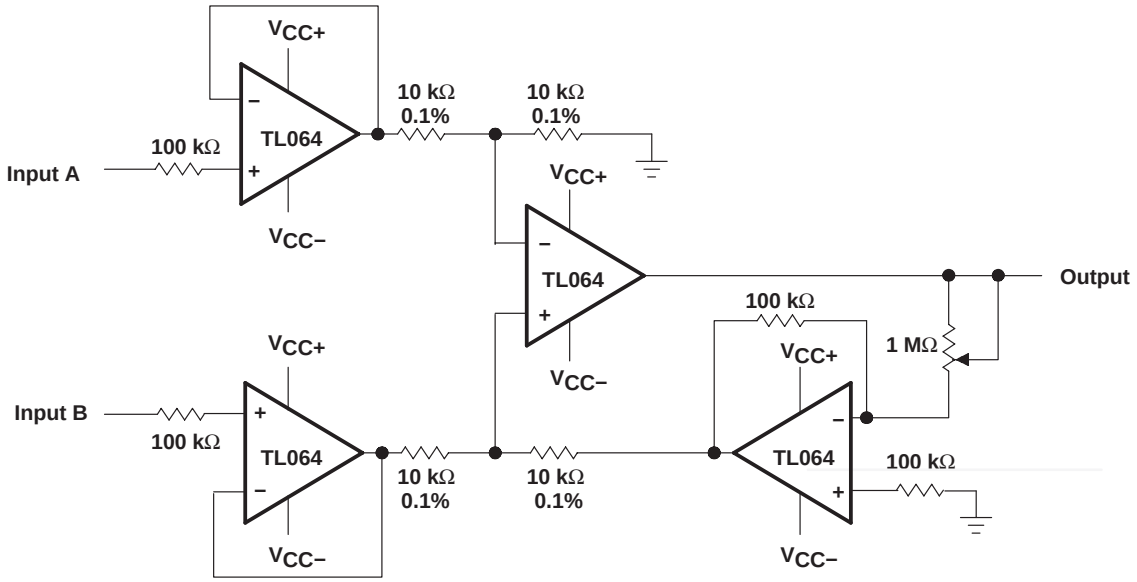

Figure 19. Instrumentation Amplifier

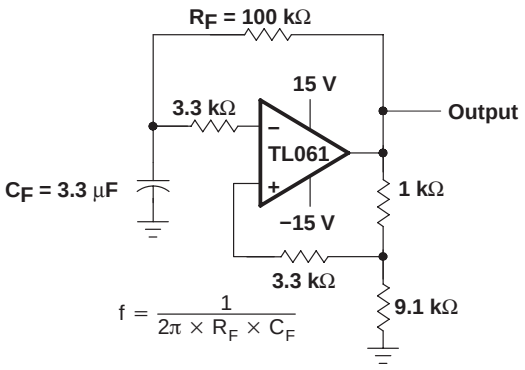

Figure 20. 0.5-Hz Square-Wave Oscillator

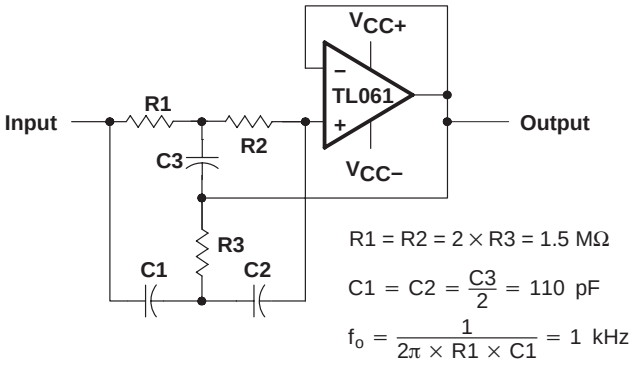

Figure 21. High-Q Notch Filter

APPLICATION INFORMATION

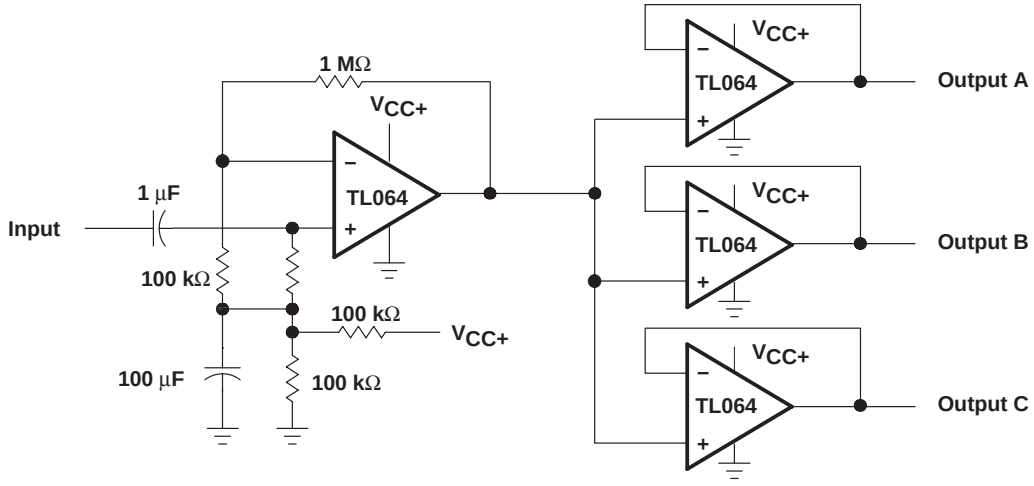

Figure 22. Audio-Distribution Amplifier

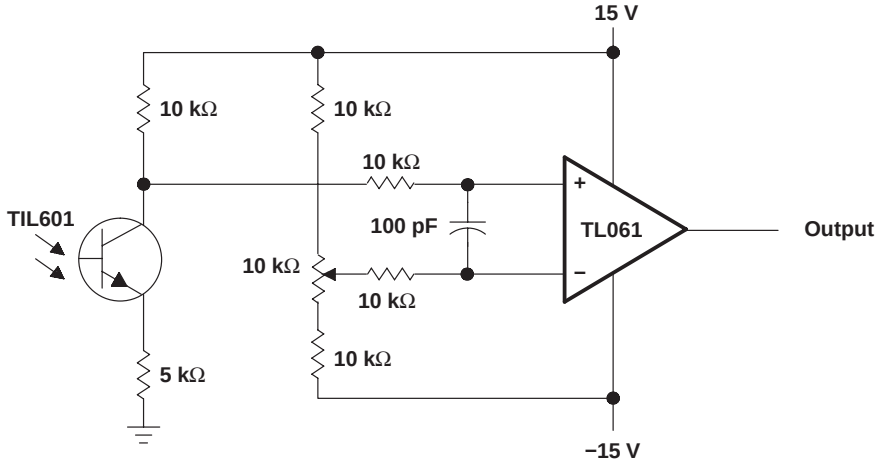

Figure 23. Low-Level Light Detector Preamplifier

APPLICATION INFORMATION

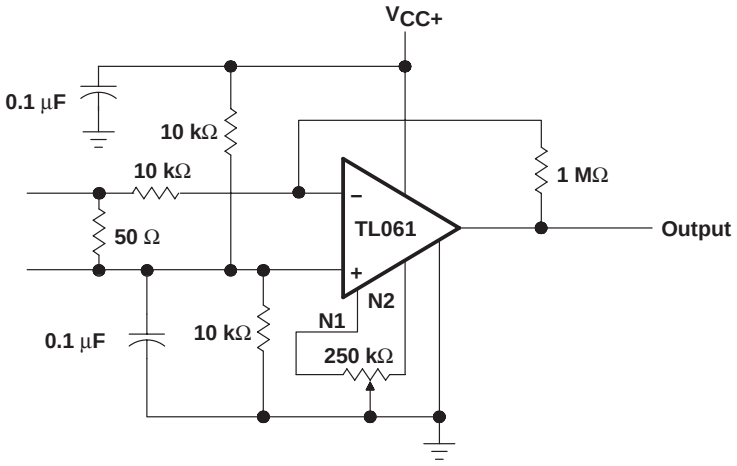

Figure 24. AC Amplifier

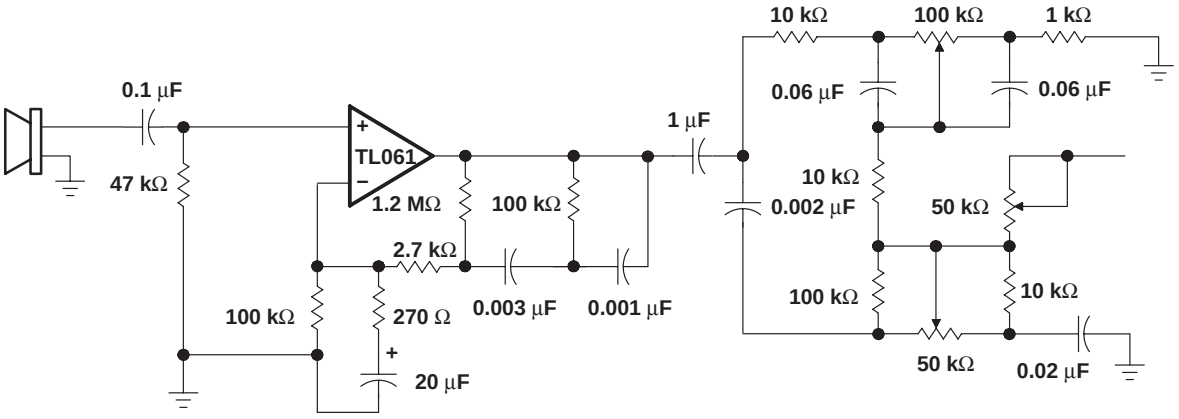

Figure 25. Microphone Preamplifier With Tone Control

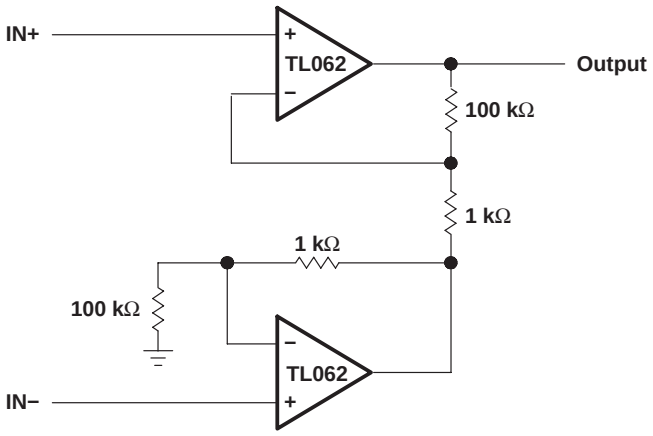

Figure 26. Instrumentation Amplifier

TEXAS INSTRUMENTS
POST OFFICE BOX 655303 • DALLAS, TEXAS 75265

APPLICATION INFORMATION

IC PREAMPLIFIER RESPONSE CHARACTERISTICS

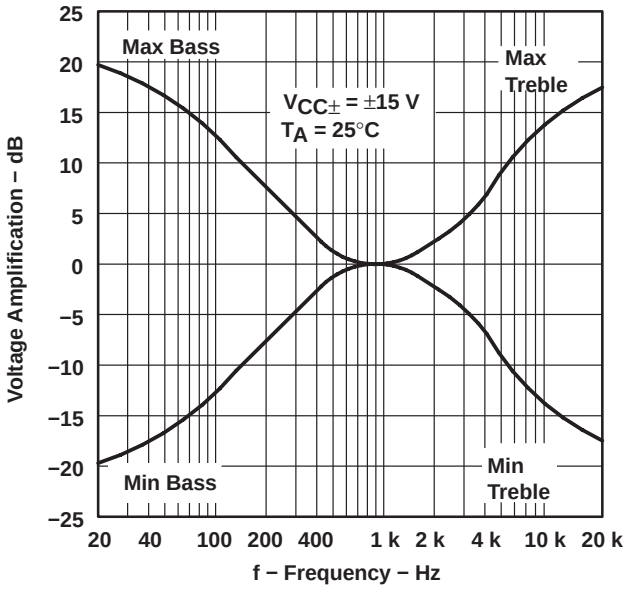

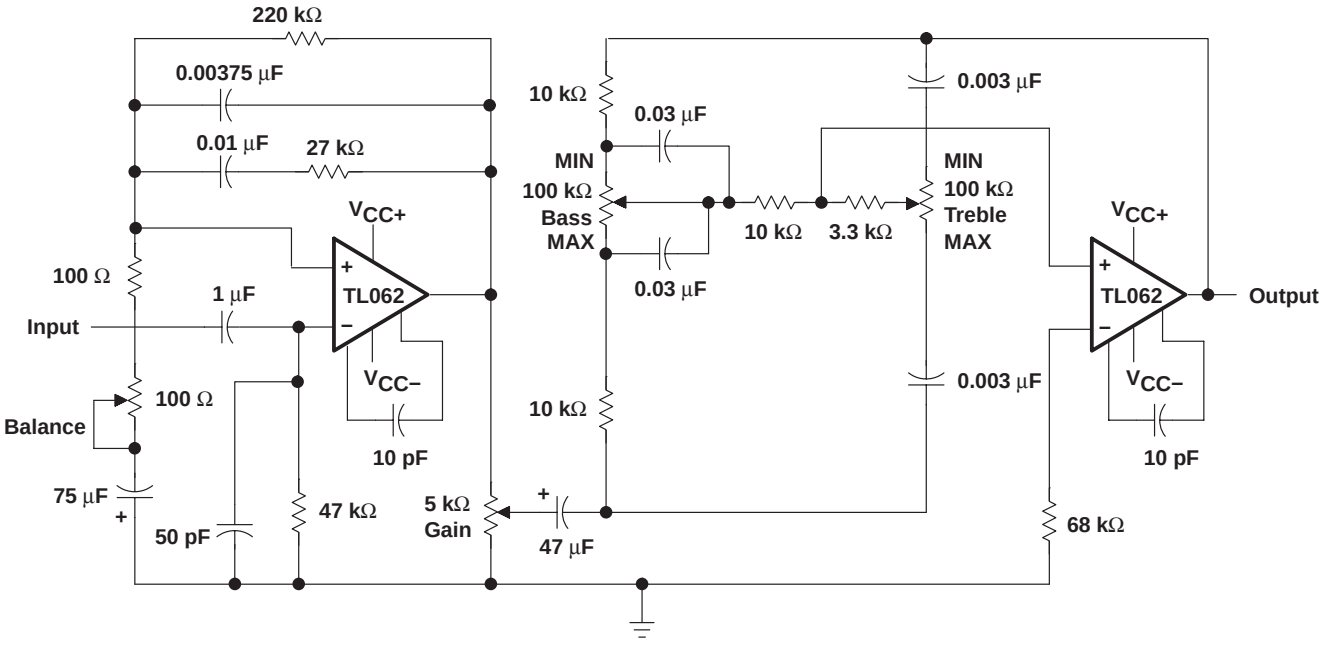

Figure 27. IC Preamplifier

PACKAGING INFORMATION

Orderable Device	Status (1)	Package Type	Package Drawing	Pins	Package Qty	Eco Plan (2)	Lead/Ball Finish	MSL Peak Temp (3)
81023012A	OBSOLETE	LCCC	FK	20		TBD	Call TI	Call TI
81023022A	ACTIVE	LCCC	FK	20	1	TBD	POST-PLATE	N / A for Pkg Type
8102302HA	ACTIVE	CFP	U	10	1	TBD	A42	N / A for Pkg Type
8102302PA	ACTIVE	CDIP	JG	8	1	TBD	A42	N / A for Pkg Type
81023032A	ACTIVE	LCCC	FK	20	1	TBD	POST-PLATE	N / A for Pkg Type
8102303CA	ACTIVE	CDIP	J	14	1	TBD	A42	N / A for Pkg Type
8102303DA	ACTIVE	CFP	W	14	1	TBD	A42	N / A for Pkg Type
TL061ACD	ACTIVE	SOIC	D	8	75	Green (RoHS & no Sb/Br)	CU NIPDAU	Level-1-260C-UNLIM
TL061ACDE4	ACTIVE	SOIC	D	8	75	Green (RoHS & no Sb/Br)	CU NIPDAU	Level-1-260C-UNLIM
TL061ACDG4	ACTIVE	SOIC	D	8	75	Green (RoHS & no Sb/Br)	CU NIPDAU	Level-1-260C-UNLIM
TL061ACDR	ACTIVE	SOIC	D	8	2500	Green (RoHS & no Sb/Br)	CU NIPDAU	Level-1-260C-UNLIM
TL061ACDRE4	ACTIVE	SOIC	D	8	2500	Green (RoHS & no Sb/Br)	CU NIPDAU	Level-1-260C-UNLIM
TL061ACDRG4	ACTIVE	SOIC	D	8	2500	Green (RoHS & no Sb/Br)	CU NIPDAU	Level-1-260C-UNLIM
TL061ACP	ACTIVE	PDIP	P	8	50	Pb-Free (RoHS)	CU NIPDAU	N / A for Pkg Type
TL061ACPE4	ACTIVE	PDIP	P	8	50	Pb-Free (RoHS)	CU NIPDAU	N / A for Pkg Type
TL061BCD	OBSOLETE	SOIC	D	8		TBD	Call TI	Call TI
TL061BCP	ACTIVE	PDIP	P	8	50	Pb-Free (RoHS)	CU NIPDAU	N / A for Pkg Type
TL061BCPE4	ACTIVE	PDIP	P	8	50	Pb-Free (RoHS)	CU NIPDAU	N / A for Pkg Type
TL061CD	ACTIVE	SOIC	D	8	75	Green (RoHS & no Sb/Br)	CU NIPDAU	Level-1-260C-UNLIM
TL061CDE4	ACTIVE	SOIC	D	8	75	Green (RoHS & no Sb/Br)	CU NIPDAU	Level-1-260C-UNLIM
TL061CDG4	ACTIVE	SOIC	D	8	75	Green (RoHS & no Sb/Br)	CU NIPDAU	Level-1-260C-UNLIM
TL061CDR	ACTIVE	SOIC	D	8	2500	Green (RoHS & no Sb/Br)	CU NIPDAU	Level-1-260C-UNLIM
TL061CDRE4	ACTIVE	SOIC	D	8	2500	Green (RoHS & no Sb/Br)	CU NIPDAU	Level-1-260C-UNLIM
TL061CDRG4	ACTIVE	SOIC	D	8	2500	Green (RoHS & no Sb/Br)	CU NIPDAU	Level-1-260C-UNLIM
TL061CP	ACTIVE	PDIP	P	8	50	Pb-Free (RoHS)	CU NIPDAU	N / A for Pkg Type
TL061CPE4	ACTIVE	PDIP	P	8	50	Pb-Free (RoHS)	CU NIPDAU	N / A for Pkg Type
TL061CPSR	ACTIVE	SO	PS	8	2000	Green (RoHS & no Sb/Br)	CU NIPDAU	Level-1-260C-UNLIM
TL061CPSRE4	ACTIVE	SO	PS	8	2000	Green (RoHS & no Sb/Br)	CU NIPDAU	Level-1-260C-UNLIM

Orderable Device	Status (1)	Package Type	Package Drawing	Pins	Package Qty	Eco Plan (2)	Lead/Ball Finish	MSL Peak Temp (3)
TL061CPSRG4	ACTIVE	SO	PS	8	2000	Green (RoHS & no Sb/Br)	CU NIPDAU	Level-1-260C-UNLIM
TL061CPWLE	OBSOLETE	TSSOP	PW	8		TBD	Call TI	Call TI
TL061ID	ACTIVE	SOIC	D	8	75	Green (RoHS & no Sb/Br)	CU NIPDAU	Level-1-260C-UNLIM
TL061IDE4	ACTIVE	SOIC	D	8	75	Green (RoHS & no Sb/Br)	CU NIPDAU	Level-1-260C-UNLIM
TL061IDG4	ACTIVE	SOIC	D	8	75	Green (RoHS & no Sb/Br)	CU NIPDAU	Level-1-260C-UNLIM
TL061IDR	ACTIVE	SOIC	D	8	2500	Green (RoHS & no Sb/Br)	CU NIPDAU	Level-1-260C-UNLIM
TL061IDRE4	ACTIVE	SOIC	D	8	2500	Green (RoHS & no Sb/Br)	CU NIPDAU	Level-1-260C-UNLIM
TL061IDRG4	ACTIVE	SOIC	D	8	2500	Green (RoHS & no Sb/Br)	CU NIPDAU	Level-1-260C-UNLIM
TL061IP	ACTIVE	PDIP	P	8	50	Pb-Free (RoHS)	CU NIPDAU	N / A for Pkg Type
TL061IPE4	ACTIVE	PDIP	P	8	50	Pb-Free (RoHS)	CU NIPDAU	N / A for Pkg Type
TL061MJG	OBSOLETE	CDIP	JG	8		TBD	Call TI	Call TI
TL061MJGB	OBSOLETE	CDIP	JG	8		TBD	Call TI	Call TI
TL062ACD	ACTIVE	SOIC	D	8	75	Green (RoHS & no Sb/Br)	CU NIPDAU	Level-1-260C-UNLIM
TL062ACDE4	ACTIVE	SOIC	D	8	75	Green (RoHS & no Sb/Br)	CU NIPDAU	Level-1-260C-UNLIM
TL062ACDG4	ACTIVE	SOIC	D	8	75	Green (RoHS & no Sb/Br)	CU NIPDAU	Level-1-260C-UNLIM
TL062ACDR	ACTIVE	SOIC	D	8	2500	Green (RoHS & no Sb/Br)	CU NIPDAU	Level-1-260C-UNLIM
TL062ACDRE4	ACTIVE	SOIC	D	8	2500	Green (RoHS & no Sb/Br)	CU NIPDAU	Level-1-260C-UNLIM
TL062ACDRG4	ACTIVE	SOIC	D	8	2500	Green (RoHS & no Sb/Br)	CU NIPDAU	Level-1-260C-UNLIM
TL062ACJG	OBSOLETE	CDIP	JG	8		TBD	Call TI	Call TI
TL062ACP	ACTIVE	PDIP	P	8	50	Pb-Free (RoHS)	CU NIPDAU	N / A for Pkg Type
TL062ACPE4	ACTIVE	PDIP	P	8	50	Pb-Free (RoHS)	CU NIPDAU	N / A for Pkg Type
TL062ACPSR	ACTIVE	SO	PS	8	2000	Green (RoHS & no Sb/Br)	CU NIPDAU	Level-1-260C-UNLIM
TL062ACPSRE4	ACTIVE	SO	PS	8	2000	Green (RoHS & no Sb/Br)	CU NIPDAU	Level-1-260C-UNLIM
TL062ACPSRG4	ACTIVE	SO	PS	8	2000	Green (RoHS & no Sb/Br)	CU NIPDAU	Level-1-260C-UNLIM
TL062BCD	ACTIVE	SOIC	D	8	75	Green (RoHS & no Sb/Br)	CU NIPDAU	Level-1-260C-UNLIM
TL062BCDE4	ACTIVE	SOIC	D	8	75	Green (RoHS & no Sb/Br)	CU NIPDAU	Level-1-260C-UNLIM
TL062BCDG4	ACTIVE	SOIC	D	8	75	Green (RoHS & no Sb/Br)	CU NIPDAU	Level-1-260C-UNLIM
TL062BCDR	ACTIVE	SOIC	D	8	2500	Green (RoHS &	CU NIPDAU	Level-1-260C-UNLIM

Orderable Device	Status (1)	Package Type	Package Drawing	Pins	Package Qty	Eco Plan (2)	Lead/Ball Finish	MSL Peak Temp (3)
						no Sb/Br)		
TL062BCDRE4	ACTIVE	SOIC	D	8	2500	Green (RoHS & no Sb/Br)	CU NIPDAU	Level-1-260C-UNLIM
TL062BCDRG4	ACTIVE	SOIC	D	8	2500	Green (RoHS & no Sb/Br)	CU NIPDAU	Level-1-260C-UNLIM
TL062BCP	ACTIVE	PDIP	P	8	50	Pb-Free (RoHS)	CU NIPDAU	N / A for Pkg Type
TL062BCPE4	ACTIVE	PDIP	P	8	50	Pb-Free (RoHS)	CU NIPDAU	N / A for Pkg Type
TL062CD	ACTIVE	SOIC	D	8	75	Green (RoHS & no Sb/Br)	CU NIPDAU	Level-1-260C-UNLIM
TL062CDE4	ACTIVE	SOIC	D	8	75	Green (RoHS & no Sb/Br)	CU NIPDAU	Level-1-260C-UNLIM
TL062CDG4	ACTIVE	SOIC	D	8	75	Green (RoHS & no Sb/Br)	CU NIPDAU	Level-1-260C-UNLIM
TL062CDR	ACTIVE	SOIC	D	8	2500	Green (RoHS & no Sb/Br)	CU NIPDAU	Level-1-260C-UNLIM
TL062CDRE4	ACTIVE	SOIC	D	8	2500	Green (RoHS & no Sb/Br)	CU NIPDAU	Level-1-260C-UNLIM
TL062CDRG4	ACTIVE	SOIC	D	8	2500	Green (RoHS & no Sb/Br)	CU NIPDAU	Level-1-260C-UNLIM
TL062CJG	OBSOLETE	CDIP	JG	8		TBD	Call TI	Call TI
TL062CP	ACTIVE	PDIP	P	8	50	Pb-Free (RoHS)	CU NIPDAU	N / A for Pkg Type
TL062CPE4	ACTIVE	PDIP	P	8	50	Pb-Free (RoHS)	CU NIPDAU	N / A for Pkg Type
TL062CPSLE	OBSOLETE	SO	PS	8		TBD	Call TI	Call TI
TL062CPSR	ACTIVE	SO	PS	8	2000	Green (RoHS & no Sb/Br)	CU NIPDAU	Level-1-260C-UNLIM
TL062CPSRE4	ACTIVE	SO	PS	8	2000	Green (RoHS & no Sb/Br)	CU NIPDAU	Level-1-260C-UNLIM
TL062CPSRG4	ACTIVE	SO	PS	8	2000	Green (RoHS & no Sb/Br)	CU NIPDAU	Level-1-260C-UNLIM
TL062CPW	ACTIVE	TSSOP	PW	8	150	Green (RoHS & no Sb/Br)	CU NIPDAU	Level-1-260C-UNLIM
TL062CPWE4	ACTIVE	TSSOP	PW	8	150	Green (RoHS & no Sb/Br)	CU NIPDAU	Level-1-260C-UNLIM
TL062CPWG4	ACTIVE	TSSOP	PW	8	150	Green (RoHS & no Sb/Br)	CU NIPDAU	Level-1-260C-UNLIM
TL062CPWLE	OBSOLETE	TSSOP	PW	8		TBD	Call TI	Call TI
TL062CPWR	ACTIVE	TSSOP	PW	8	2000	Green (RoHS & no Sb/Br)	CU NIPDAU	Level-1-260C-UNLIM
TL062CPWRE4	ACTIVE	TSSOP	PW	8	2000	Green (RoHS & no Sb/Br)	CU NIPDAU	Level-1-260C-UNLIM
TL062CPWRG4	ACTIVE	TSSOP	PW	8	2000	Green (RoHS & no Sb/Br)	CU NIPDAU	Level-1-260C-UNLIM
TL062ID	ACTIVE	SOIC	D	8	75	Green (RoHS & no Sb/Br)	CU NIPDAU	Level-1-260C-UNLIM
TL062IDE4	ACTIVE	SOIC	D	8	75	Green (RoHS & no Sb/Br)	CU NIPDAU	Level-1-260C-UNLIM
TL062IDG4	ACTIVE	SOIC	D	8	75	Green (RoHS &	CU NIPDAU	Level-1-260C-UNLIM

Orderable Device	Status (1)	Package Type	Package Drawing	Pins	Package Qty	Eco Plan (2)	Lead/Ball Finish	MSL Peak Temp (3)
						no Sb/Br)		
TL062IDR	ACTIVE	SOIC	D	8	2500	Green (RoHS & no Sb/Br)	CU NIPDAU	Level-1-260C-UNLIM
TL062IDRE4	ACTIVE	SOIC	D	8	2500	Green (RoHS & no Sb/Br)	CU NIPDAU	Level-1-260C-UNLIM
TL062IDRG4	ACTIVE	SOIC	D	8	2500	Green (RoHS & no Sb/Br)	CU NIPDAU	Level-1-260C-UNLIM
TL062IJG	OBSOLETE	CDIP	JG	8		TBD	Call TI	Call TI
TL062IP	ACTIVE	PDIP	P	8	50	Pb-Free (RoHS)	CU NIPDAU	N / A for Pkg Type
TL062IPE4	ACTIVE	PDIP	P	8	50	Pb-Free (RoHS)	CU NIPDAU	N / A for Pkg Type
TL062IPWR	ACTIVE	TSSOP	PW	8	2000	Green (RoHS & no Sb/Br)	CU NIPDAU	Level-1-260C-UNLIM
TL062IPWRE4	ACTIVE	TSSOP	PW	8	2000	Green (RoHS & no Sb/Br)	CU NIPDAU	Level-1-260C-UNLIM
TL062IPWRG4	ACTIVE	TSSOP	PW	8	2000	Green (RoHS & no Sb/Br)	CU NIPDAU	Level-1-260C-UNLIM
TL062MFKB	ACTIVE	LCCC	FK	20	1	TBD	POST-PLATE	N / A for Pkg Type
TL062MJG	ACTIVE	CDIP	JG	8	1	TBD	A42	N / A for Pkg Type
TL062MJGB	ACTIVE	CDIP	JG	8	1	TBD	A42	N / A for Pkg Type
TL064ACD	ACTIVE	SOIC	D	14	50	Green (RoHS & no Sb/Br)	CU NIPDAU	Level-1-260C-UNLIM
TL064ACDE4	ACTIVE	SOIC	D	14	50	Green (RoHS & no Sb/Br)	CU NIPDAU	Level-1-260C-UNLIM
TL064ACDG4	ACTIVE	SOIC	D	14	50	Green (RoHS & no Sb/Br)	CU NIPDAU	Level-1-260C-UNLIM
TL064ACDR	ACTIVE	SOIC	D	14	2500	Green (RoHS & no Sb/Br)	CU NIPDAU	Level-1-260C-UNLIM
TL064ACDRE4	ACTIVE	SOIC	D	14	2500	Green (RoHS & no Sb/Br)	CU NIPDAU	Level-1-260C-UNLIM
TL064ACDRG4	ACTIVE	SOIC	D	14	2500	Green (RoHS & no Sb/Br)	CU NIPDAU	Level-1-260C-UNLIM
TL064ACN	ACTIVE	PDIP	N	14	25	Pb-Free (RoHS)	CU NIPDAU	N / A for Pkg Type
TL064ACNE4	ACTIVE	PDIP	N	14	25	Pb-Free (RoHS)	CU NIPDAU	N / A for Pkg Type
TL064BCD	ACTIVE	SOIC	D	14	50	Green (RoHS & no Sb/Br)	CU NIPDAU	Level-1-260C-UNLIM
TL064BCDE4	ACTIVE	SOIC	D	14	50	Green (RoHS & no Sb/Br)	CU NIPDAU	Level-1-260C-UNLIM
TL064BCDG4	ACTIVE	SOIC	D	14	50	Green (RoHS & no Sb/Br)	CU NIPDAU	Level-1-260C-UNLIM
TL064BCDR	ACTIVE	SOIC	D	14	2500	Green (RoHS & no Sb/Br)	CU NIPDAU	Level-1-260C-UNLIM
TL064BCDRE4	ACTIVE	SOIC	D	14	2500	Green (RoHS & no Sb/Br)	CU NIPDAU	Level-1-260C-UNLIM
TL064BCDRG4	ACTIVE	SOIC	D	14	2500	Green (RoHS & no Sb/Br)	CU NIPDAU	Level-1-260C-UNLIM
TL064BCN	ACTIVE	PDIP	N	14	25	Pb-Free (RoHS)	CU NIPDAU	N / A for Pkg Type

Orderable Device	Status (1)	Package Type	Package Drawing	Pins	Package Qty	Eco Plan (2)	Lead/Ball Finish	MSL Peak Temp (3)
TL064BCNE4	ACTIVE	PDIP	N	14	25	Pb-Free (RoHS)	CU NIPDAU	N / A for Pkg Type
TL064CD	ACTIVE	SOIC	D	14	50	Green (RoHS & no Sb/Br)	CU NIPDAU	Level-1-260C-UNLIM
TL064CDBR	ACTIVE	SSOP	DB	14	2000	Green (RoHS & no Sb/Br)	CU NIPDAU	Level-1-260C-UNLIM
TL064CDBRE4	ACTIVE	SSOP	DB	14	2000	Green (RoHS & no Sb/Br)	CU NIPDAU	Level-1-260C-UNLIM
TL064CDBRG4	ACTIVE	SSOP	DB	14	2000	Green (RoHS & no Sb/Br)	CU NIPDAU	Level-1-260C-UNLIM
TL064CDE4	ACTIVE	SOIC	D	14	50	Green (RoHS & no Sb/Br)	CU NIPDAU	Level-1-260C-UNLIM
TL064CDG4	ACTIVE	SOIC	D	14	50	Green (RoHS & no Sb/Br)	CU NIPDAU	Level-1-260C-UNLIM
TL064CDR	ACTIVE	SOIC	D	14	2500	Green (RoHS & no Sb/Br)	CU NIPDAU	Level-1-260C-UNLIM
TL064CDRE4	ACTIVE	SOIC	D	14	2500	Green (RoHS & no Sb/Br)	CU NIPDAU	Level-1-260C-UNLIM
TL064CDRG4	ACTIVE	SOIC	D	14	2500	Green (RoHS & no Sb/Br)	CU NIPDAU	Level-1-260C-UNLIM
TL064CN	ACTIVE	PDIP	N	14	25	Pb-Free (RoHS)	CU NIPDAU	N / A for Pkg Type
TL064CNE4	ACTIVE	PDIP	N	14	25	Pb-Free (RoHS)	CU NIPDAU	N / A for Pkg Type
TL064CNSR	ACTIVE	SO	NS	14	2000	Green (RoHS & no Sb/Br)	CU NIPDAU	Level-1-260C-UNLIM
TL064CNSRE4	ACTIVE	SO	NS	14	2000	Green (RoHS & no Sb/Br)	CU NIPDAU	Level-1-260C-UNLIM
TL064CNSRG4	ACTIVE	SO	NS	14	2000	Green (RoHS & no Sb/Br)	CU NIPDAU	Level-1-260C-UNLIM
TL064CPW	ACTIVE	TSSOP	PW	14	90	Green (RoHS & no Sb/Br)	CU NIPDAU	Level-1-260C-UNLIM
TL064CPWE4	ACTIVE	TSSOP	PW	14	90	Green (RoHS & no Sb/Br)	CU NIPDAU	Level-1-260C-UNLIM
TL064CPWG4	ACTIVE	TSSOP	PW	14	90	Green (RoHS & no Sb/Br)	CU NIPDAU	Level-1-260C-UNLIM
TL064CPWLE	OBSOLETE	TSSOP	PW	14		TBD	Call TI	Call TI
TL064CPWR	ACTIVE	TSSOP	PW	14	2000	Green (RoHS & no Sb/Br)	CU NIPDAU	Level-1-260C-UNLIM
TL064CPWRE4	ACTIVE	TSSOP	PW	14	2000	Green (RoHS & no Sb/Br)	CU NIPDAU	Level-1-260C-UNLIM
TL064CPWRG4	ACTIVE	TSSOP	PW	14	2000	Green (RoHS & no Sb/Br)	CU NIPDAU	Level-1-260C-UNLIM
TL064ID	ACTIVE	SOIC	D	14	50	Green (RoHS & no Sb/Br)	CU NIPDAU	Level-1-260C-UNLIM
TL064IDE4	ACTIVE	SOIC	D	14	50	Green (RoHS & no Sb/Br)	CU NIPDAU	Level-1-260C-UNLIM
TL064IDG4	ACTIVE	SOIC	D	14	50	Green (RoHS & no Sb/Br)	CU NIPDAU	Level-1-260C-UNLIM
TL064IDR	ACTIVE	SOIC	D	14	2500	Green (RoHS & no Sb/Br)	CU NIPDAU	Level-1-260C-UNLIM

Orderable Device	Status [1]	Package Type	Package Drawing	Pins	Package Qty	Eco Plan [2]	Lead/Ball Finish	MSL Peak Temp [3]
TL064IDRE4	ACTIVE	SOIC	D	14	2500	Green (RoHS & no Sb/Br)	CU NIPDAU	Level-1-260C-UNLIM
TL064IDRG4	ACTIVE	SOIC	D	14	2500	Green (RoHS & no Sb/Br)	CU NIPDAU	Level-1-260C-UNLIM
TL064IN	ACTIVE	PDIP	N	14	25	Pb-Free (RoHS)	CU NIPDAU	N / A for Pkg Type
TL064INE4	ACTIVE	PDIP	N	14	25	Pb-Free (RoHS)	CU NIPDAU	N / A for Pkg Type
TL064INS	ACTIVE	SO	NS	14	50	Green (RoHS & no Sb/Br)	CU NIPDAU	Level-1-260C-UNLIM
TL064INSG4	ACTIVE	SO	NS	14	50	Green (RoHS & no Sb/Br)	CU NIPDAU	Level-1-260C-UNLIM
TL064INSR	ACTIVE	SO	NS	14	2000	Green (RoHS & no Sb/Br)	CU NIPDAU	Level-1-260C-UNLIM
TL064INSRG4	ACTIVE	SO	NS	14	2000	Green (RoHS & no Sb/Br)	CU NIPDAU	Level-1-260C-UNLIM
TL064MFK	ACTIVE	LCCC	FK	20	1	TBD	POST-PLATE	N / A for Pkg Type
TL064MFKB	ACTIVE	LCCC	FK	20	1	TBD	POST-PLATE	N / A for Pkg Type
TL064MJ	ACTIVE	CDIP	J	14	1	TBD	A42	N / A for Pkg Type
TL064MJB	ACTIVE	CDIP	J	14	1	TBD	A42	N / A for Pkg Type
TL064MWB	ACTIVE	CFP	W	14	1	TBD	A42	N / A for Pkg Type

[1] The marketing status values are defined as follows:
ACTIVE: Product device recommended for new designs.
LIFEBUY: TI has announced that the device will be discontinued, and a lifetime-buy period is in effect.
NRND: Not recommended for new designs. Device is in production to support existing customers, but TI does not recommend using this part in a new design.
PREVIEW: Device has been announced but is not in production. Samples may or may not be available.
OBSOLETE: TI has discontinued the production of the device.

[2] Eco Plan - The planned eco-friendly classification: Pb-Free (RoHS), Pb-Free (RoHS Exempt), or Green (RoHS & no Sb/Br) - please check http://www.ti.com/productcontent for the latest availability information and additional product content details.
TBD: The Pb-Free/Green conversion plan has not been defined.
Pb-Free (RoHS): TI's terms "Lead-Free" or "Pb-Free" mean semiconductor products that are compatible with the current RoHS requirements for all 6 substances, including the requirement that lead not exceed 0.1% by weight in homogeneous materials. Where designed to be soldered at high temperatures, TI Pb-Free products are suitable for use in specified lead-free processes.
Pb-Free (RoHS Exempt): This component has a RoHS exemption for either 1) lead-based flip-chip solder bumps used between the die and package, or 2) lead-based die adhesive used between the die and leadframe. The component is otherwise considered Pb-Free (RoHS compatible) as defined above.
Green (RoHS & no Sb/Br): TI defines "Green" to mean Pb-Free (RoHS compatible), and free of Bromine (Br) and Antimony (Sb) based flame retardants (Br or Sb do not exceed 0.1% by weight in homogeneous material)

[3] MSL, Peak Temp. -- The Moisture Sensitivity Level rating according to the JEDEC industry standard classifications, and peak solder temperature.

Important Information and Disclaimer: The information provided on this page represents TI's knowledge and belief as of the date that it is provided. TI bases its knowledge and belief on information provided by third parties, and makes no representation or warranty as to the accuracy of such information. Efforts are underway to better integrate information from third parties. TI has taken and continues to take reasonable steps to provide representative and accurate information but may not have conducted destructive testing or chemical analysis on incoming materials and chemicals. TI and TI suppliers consider certain information to be proprietary, and thus CAS numbers and other limited information may not be available for release.

In no event shall TI's liability arising out of such information exceed the total purchase price of the TI part(s) at issue in this document sold by TI to Customer on an annual basis.

TAPE AND REEL INFORMATION

REEL DIMENSIONS

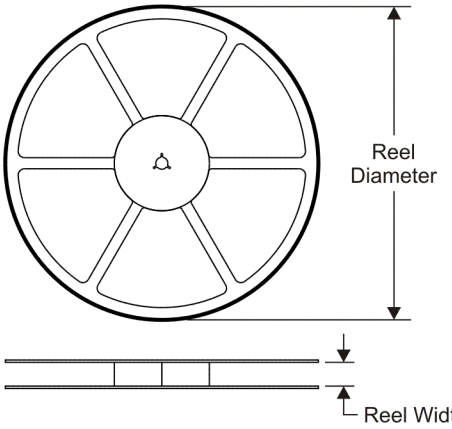

TAPE DIMENSIONS

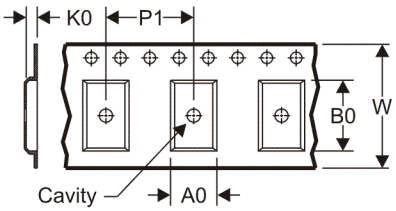

A0	Dimension designed to accommodate the component width
B0	Dimension designed to accommodate the component length
K0	Dimension designed to accommodate the component thickness
W	Overall width of the carrier tape
P1	Pitch between successive cavity centers

QUADRANT ASSIGNMENTS FOR PIN 1 ORIENTATION IN TAPE

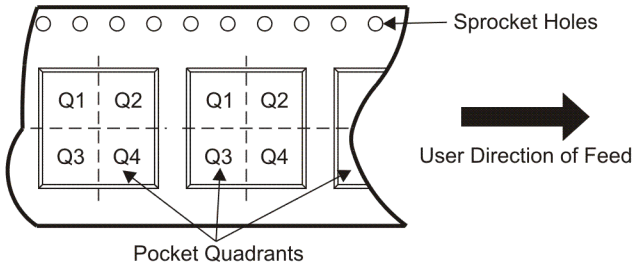

*All dimensions are nominal

Device	Package Type	Package Drawing	Pins	SPQ	Reel Diameter (mm)	Reel Width W1 (mm)	A0 (mm)	B0 (mm)	K0 (mm)	P1 (mm)	W (mm)	Pin1 Quadrant
TL061ACDR	SOIC	D	8	2500	330.0	12.4	6.4	5.2	2.1	8.0	12.0	Q1
TL061CDR	SOIC	D	8	2500	330.0	12.4	6.4	5.2	2.1	8.0	12.0	Q1
TL061CDR	SOIC	D	8	2500	330.0	12.4	6.4	5.2	2.1	8.0	12.0	Q1
TL061CPSR	SO	PS	8	2000	330.0	16.4	8.2	6.6	2.5	12.0	16.0	Q1
TL061IDR	SOIC	D	8	2500	330.0	12.4	6.4	5.2	2.1	8.0	12.0	Q1
TL061IDR	SOIC	D	8	2500	330.0	12.4	6.4	5.2	2.1	8.0	12.0	Q1
TL062ACDR	SOIC	D	8	2500	330.0	12.4	6.4	5.2	2.1	8.0	12.0	Q1
TL062ACPSR	SO	PS	8	2000	330.0	16.4	8.2	6.6	2.5	12.0	16.0	Q1
TL062BCDR	SOIC	D	8	2500	330.0	12.4	6.4	5.2	2.1	8.0	12.0	Q1
TL062CDR	SOIC	D	8	2500	330.0	12.4	6.4	5.2	2.1	8.0	12.0	Q1
TL062CDR	SOIC	D	8	2500	330.0	12.4	6.4	5.2	2.1	8.0	12.0	Q1
TL062CPSR	SO	PS	8	2000	330.0	16.4	8.2	6.6	2.5	12.0	16.0	Q1
TL062CPWR	TSSOP	PW	8	2000	330.0	12.4	7.0	3.6	1.6	8.0	12.0	Q1
TL062IDR	SOIC	D	8	2500	330.0	12.4	6.4	5.2	2.1	8.0	12.0	Q1
TL062IDR	SOIC	D	8	2500	330.0	12.4	6.4	5.2	2.1	8.0	12.0	Q1
TL062IPWR	TSSOP	PW	8	2000	330.0	12.4	7.0	3.6	1.6	8.0	12.0	Q1
TL064ACDR	SOIC	D	14	2500	330.0	16.4	6.5	9.0	2.1	8.0	16.0	Q1
TL064BCDR	SOIC	D	14	2500	330.0	16.4	6.5	9.0	2.1	8.0	16.0	Q1

Device	Package Type	Package Drawing	Pins	SPQ	Reel Diameter (mm)	Reel Width W1 (mm)	A0 (mm)	B0 (mm)	K0 (mm)	P1 (mm)	W (mm)	Pin1 Quadrant
TL064CDBR	SSOP	DB	14	2000	330.0	16.4	8.2	6.6	2.5	12.0	16.0	Q1
TL064CDR	SOIC	D	14	2500	330.0	16.4	6.5	9.0	2.1	8.0	16.0	Q1
TL064CNSR	SO	NS	14	2000	330.0	16.4	8.2	10.5	2.5	12.0	16.0	Q1
TL064CPWR	TSSOP	PW	14	2000	330.0	12.4	6.9	5.6	1.6	8.0	12.0	Q1
TL064IDR	SOIC	D	14	2500	330.0	16.4	6.5	9.0	2.1	8.0	16.0	Q1
TL064INSR	SO	NS	14	2000	330.0	16.4	8.2	10.5	2.5	12.0	16.0	Q1

TAPE AND REEL BOX DIMENSIONS

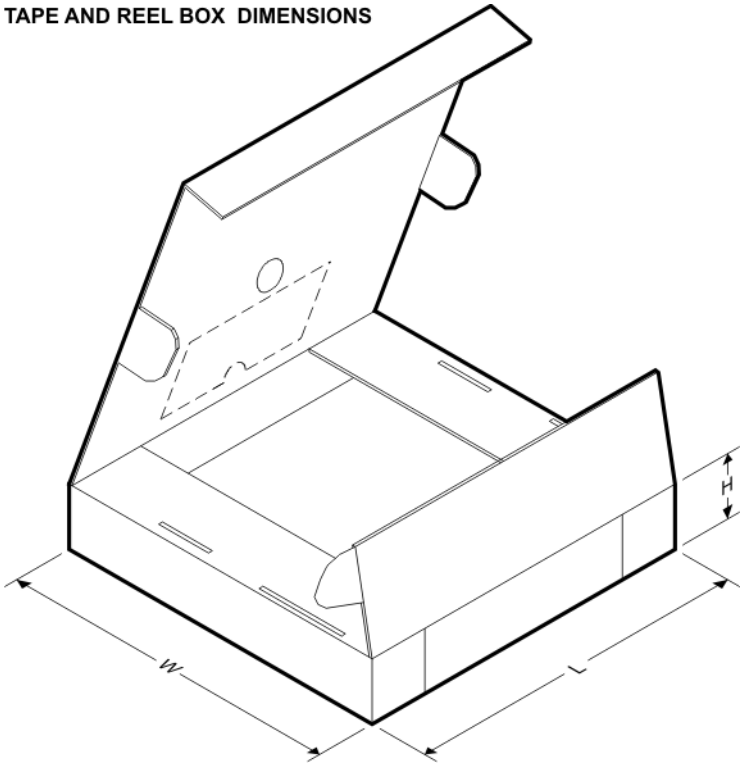

*All dimensions are nominal

Device	Package Type	Package Drawing	Pins	SPQ	Length (mm)	Width (mm)	Height (mm)
TL061ACDR	SOIC	D	8	2500	340.5	338.1	20.6
TL061CDR	SOIC	D	8	2500	340.5	338.1	20.6
TL061CDR	SOIC	D	8	2500	346.0	346.0	29.0
TL061CPSR	SO	PS	8	2000	346.0	346.0	33.0
TL061IDR	SOIC	D	8	2500	340.5	338.1	20.6
TL061IDR	SOIC	D	8	2500	346.0	346.0	29.0
TL062ACDR	SOIC	D	8	2500	340.5	338.1	20.6
TL062ACPSR	SO	PS	8	2000	346.0	346.0	33.0
TL062BCDR	SOIC	D	8	2500	340.5	338.1	20.6
TL062CDR	SOIC	D	8	2500	340.5	338.1	20.6
TL062CDR	SOIC	D	8	2500	346.0	346.0	29.0

Device	Package Type	Package Drawing	Pins	SPQ	Length (mm)	Width (mm)	Height (mm)
TL062CPSR	SO	PS	8	2000	346.0	346.0	33.0
TL062CPWR	TSSOP	PW	8	2000	346.0	346.0	29.0
TL062IDR	SOIC	D	8	2500	340.5	338.1	20.6
TL062IDR	SOIC	D	8	2500	346.0	346.0	29.0
TL062IPWR	TSSOP	PW	8	2000	346.0	346.0	29.0
TL064ACDR	SOIC	D	14	2500	346.0	346.0	33.0
TL064BCDR	SOIC	D	14	2500	346.0	346.0	33.0
TL064CDBR	SSOP	DB	14	2000	346.0	346.0	33.0
TL064CDR	SOIC	D	14	2500	346.0	346.0	33.0
TL064CNSR	SO	NS	14	2000	346.0	346.0	33.0
TL064CPWR	TSSOP	PW	14	2000	346.0	346.0	29.0
TL064IDR	SOIC	D	14	2500	346.0	346.0	33.0
TL064INSR	SO	NS	14	2000	346.0	346.0	33.0

MCER001A – JANUARY 1995 – REVISED JANUARY 1997

JG (R-GDIP-T8) **CERAMIC DUAL-IN-LINE**

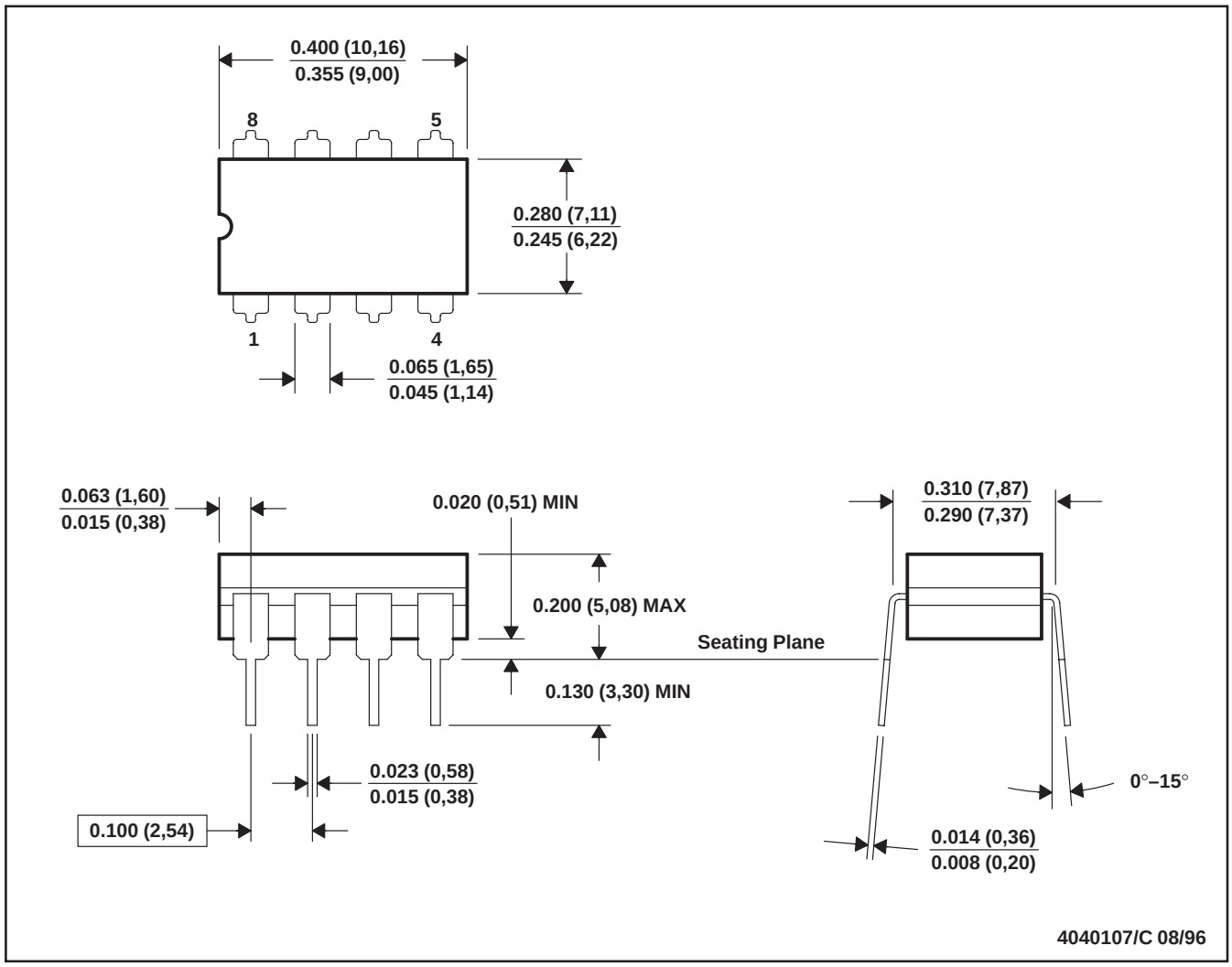

NOTES: A. All linear dimensions are in inches (millimeters).
B. This drawing is subject to change without notice.
C. This package can be hermetically sealed with a ceramic lid using glass frit.
D. Index point is provided on cap for terminal identification.
E. Falls within MIL STD 1835 GDIP1-T8

J (R–GDIP–T**)

14 LEADS SHOWN

CERAMIC DUAL IN–LINE PACKAGE

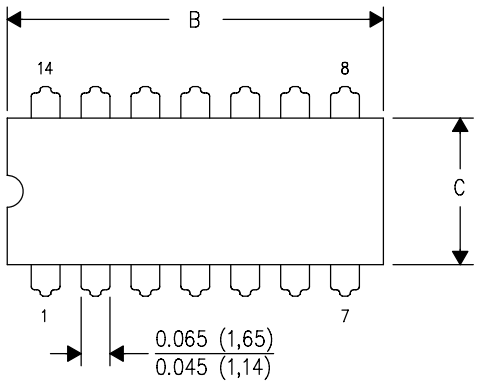

DIM \ PINS **	14	16	18	20
A	0.300 (7,62) BSC	0.300 (7,62) BSC	0.300 (7,62) BSC	0.300 (7,62) BSC
B MAX	0.785 (19,94)	.840 (21,34)	0.960 (24,38)	1.060 (26,92)
B MIN	—	—	—	—
C MAX	0.300 (7,62)	0.300 (7,62)	0.310 (7,87)	0.300 (7,62)
C MIN	0.245 (6,22)	0.245 (6,22)	0.220 (5,59)	0.245 (6,22)

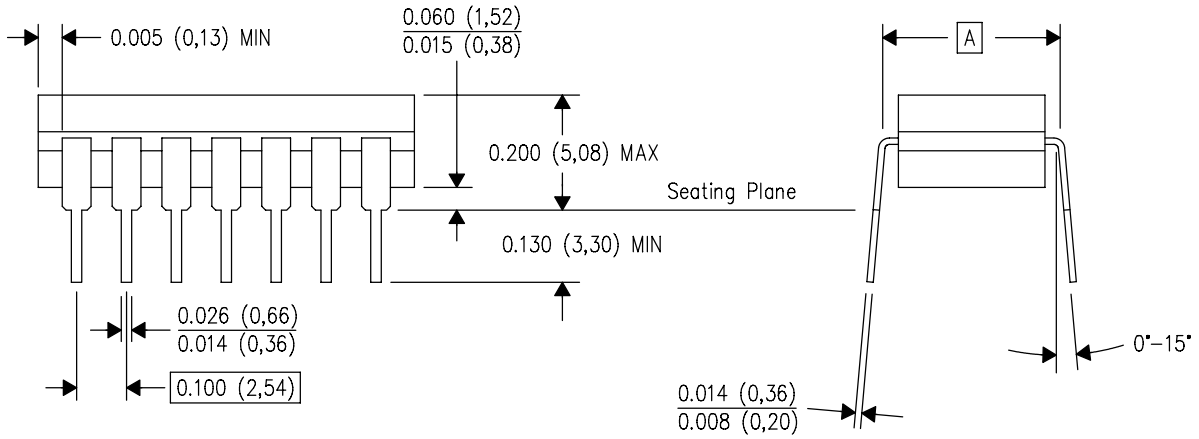

4040083/F 03/03

NOTES:
A. All linear dimensions are in inches (millimeters).
B. This drawing is subject to change without notice.
C. This package is hermetically sealed with a ceramic lid using glass frit.
D. Index point is provided on cap for terminal identification only on press ceramic glass frit seal only.
E. Falls within MIL STD 1835 GDIP1–T14, GDIP1–T16, GDIP1–T18 and GDIP1–T20.

U (S–GDFP–F10) CERAMIC DUAL FLATPACK

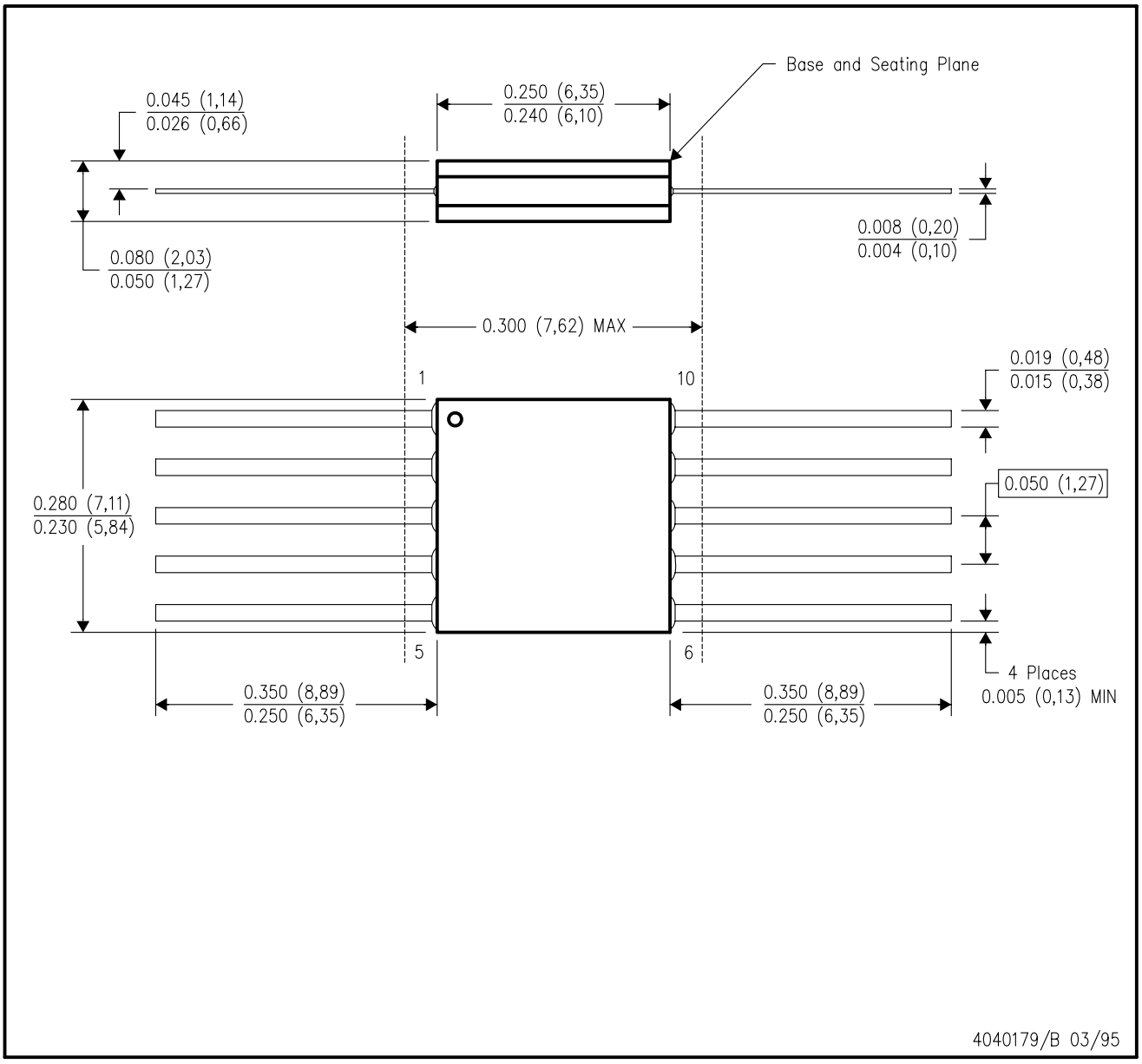

NOTES:
A. All linear dimensions are in inches (millimeters).
B. This drawing is subject to change without notice.
C. This package can be hermetically sealed with a ceramic lid using glass frit.
D. Index point is provided on cap for terminal identification only.
E. Falls within MIL STD 1835 GDFP1–F10 and JEDEC MO–092AA

W (R–GDFP–F14) CERAMIC DUAL FLATPACK

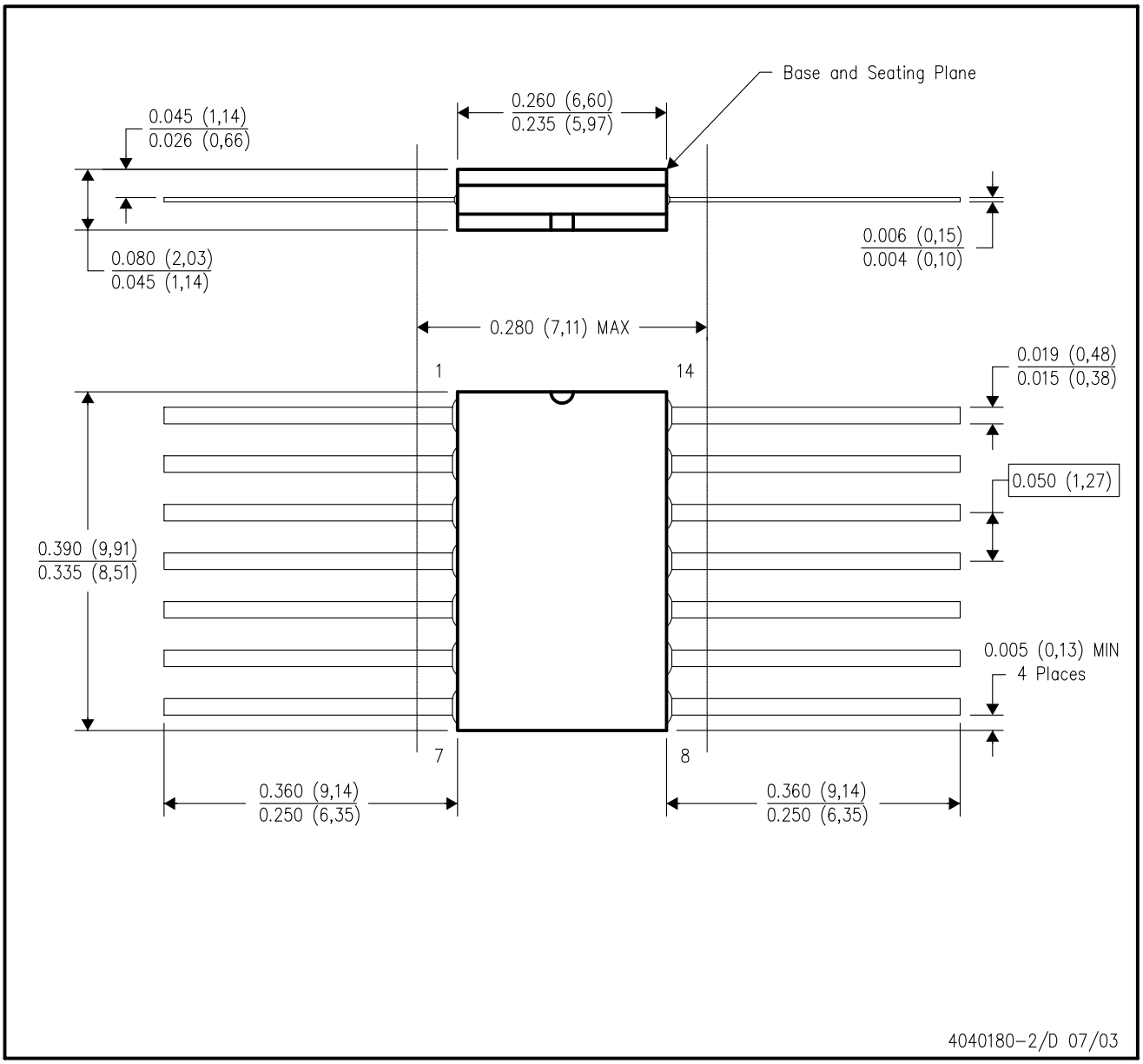

NOTES:
A. All linear dimensions are in inches (millimeters).
B. This drawing is subject to change without notice.
C. This package can be hermetically sealed with a ceramic lid using glass frit.
D. Index point is provided on cap for terminal identification only.
E. Falls within MIL STD 1835 GDFP1–F14 and JEDEC MO–092AB

FK (S-CQCC-N)** **LEADLESS CERAMIC CHIP CARRIER**

28 TERMINAL SHOWN

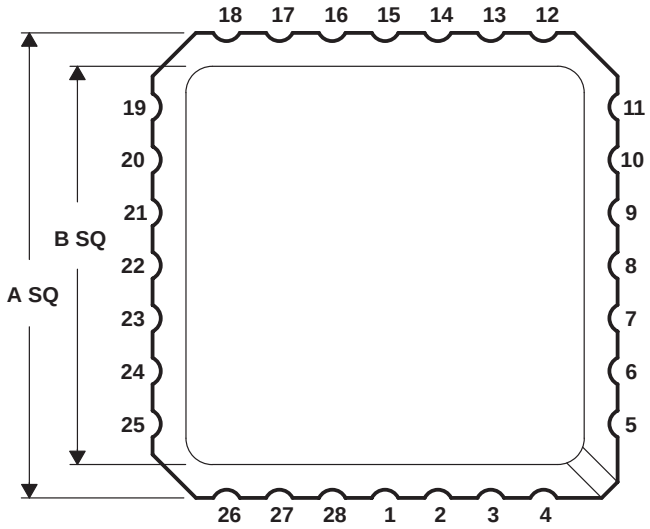

NO. OF TERMINALS **	A		B	
	MIN	MAX	MIN	MAX
20	0.342 (8,69)	0.358 (9,09)	0.307 (7,80)	0.358 (9,09)
28	0.442 (11,23)	0.458 (11,63)	0.406 (10,31)	0.458 (11,63)
44	0.640 (16,26)	0.660 (16,76)	0.495 (12,58)	0.560 (14,22)
52	0.739 (18,78)	0.761 (19,32)	0.495 (12,58)	0.560 (14,22)
68	0.938 (23,83)	0.962 (24,43)	0.850 (21,6)	0.858 (21,8)
84	1.141 (28,99)	1.165 (29,59)	1.047 (26,6)	1.063 (27,0)

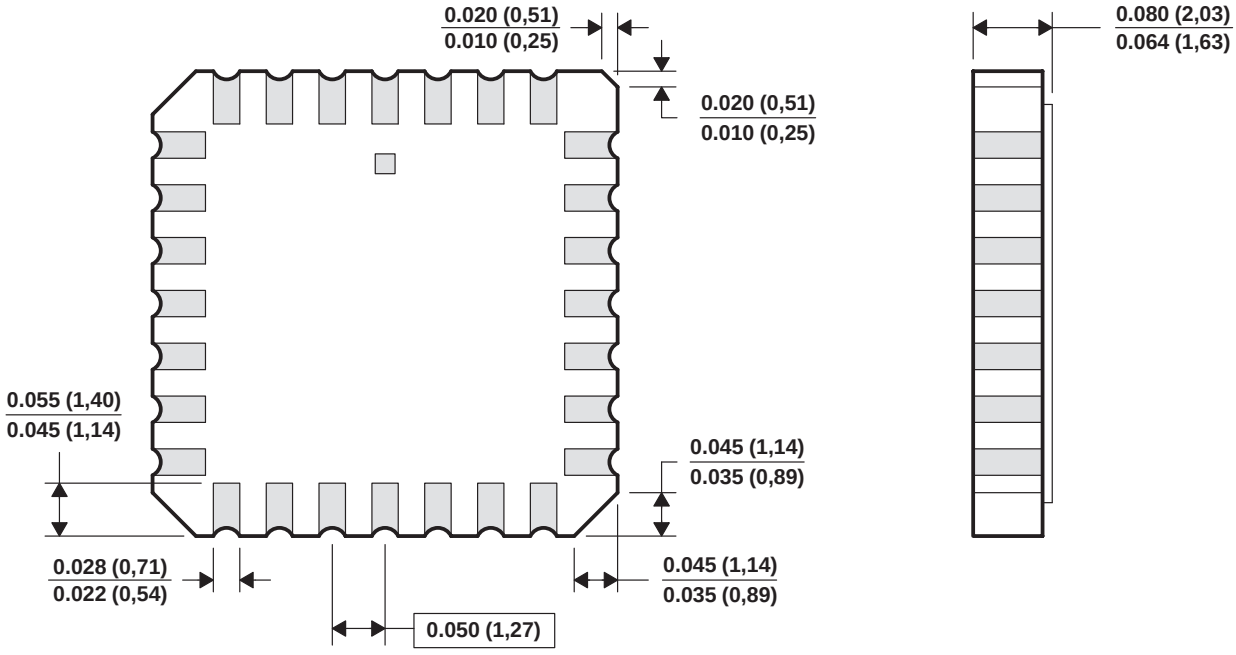

4040140/D 10/96

NOTES: A. All linear dimensions are in inches (millimeters).
B. This drawing is subject to change without notice.
C. This package can be hermetically sealed with a metal lid.
D. The terminals are gold plated.
E. Falls within JEDEC MS-004

P (R–PDIP–T8) PLASTIC DUAL–IN–LINE PACKAGE

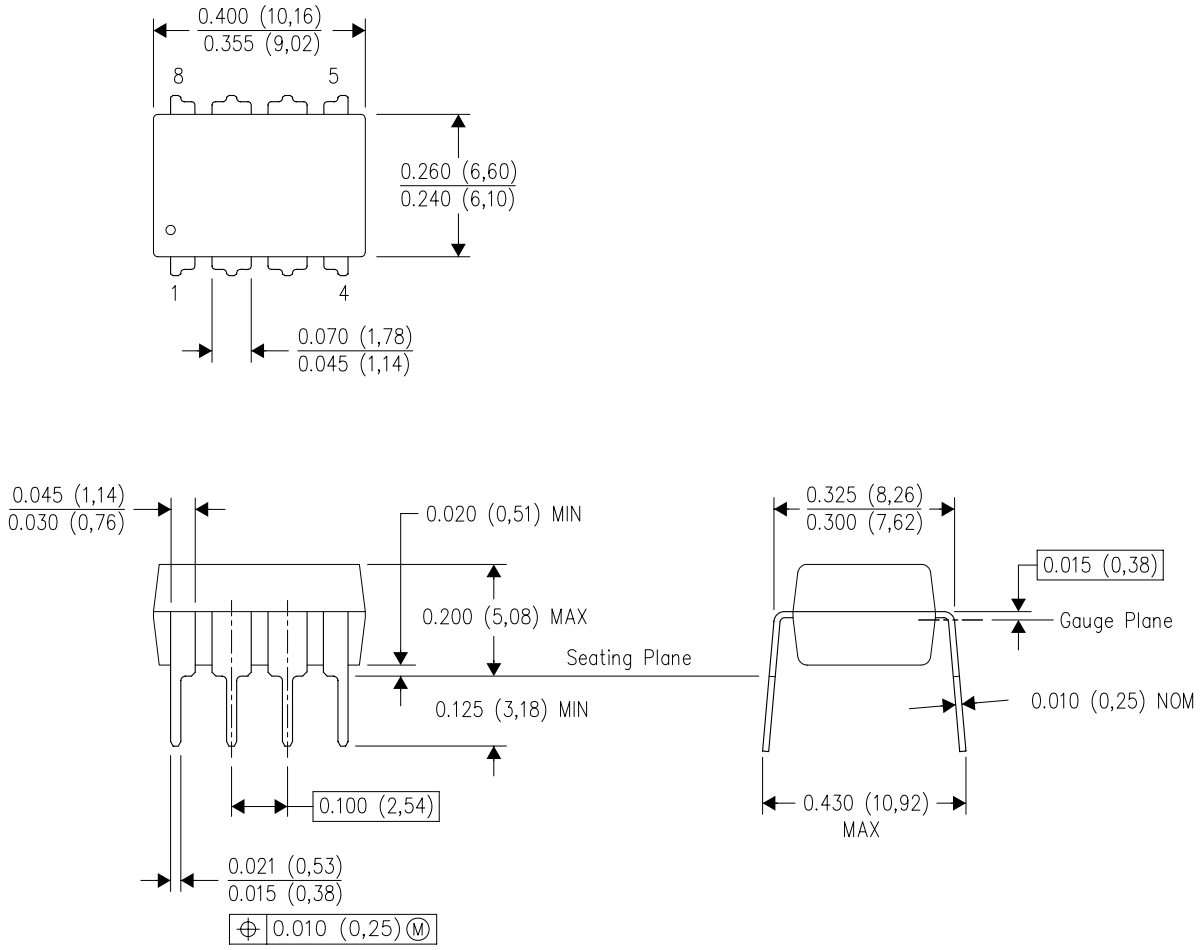

NOTES:
A. All linear dimensions are in inches (millimeters).
B. This drawing is subject to change without notice.
C. Falls within JEDEC MS–001 variation BA.

N (R–PDIP–T**)

PLASTIC DUAL–IN–LINE PACKAGE

16 PINS SHOWN

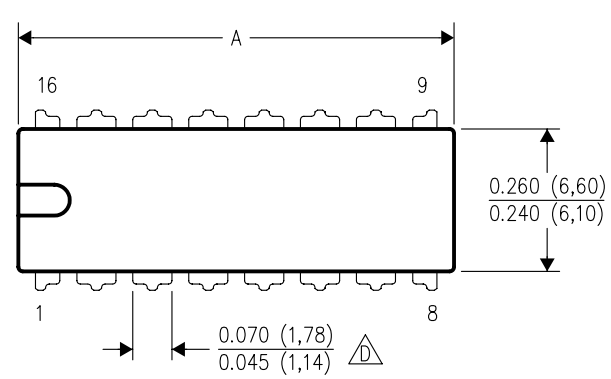

DIM \ PINS **	14	16	18	20
A MAX	0.775 (19,69)	0.775 (19,69)	0.920 (23,37)	1.060 (26,92)
A MIN	0.745 (18,92)	0.745 (18,92)	0.850 (21,59)	0.940 (23,88)
MS–001 VARIATION (C)	AA	BB	AC	AD

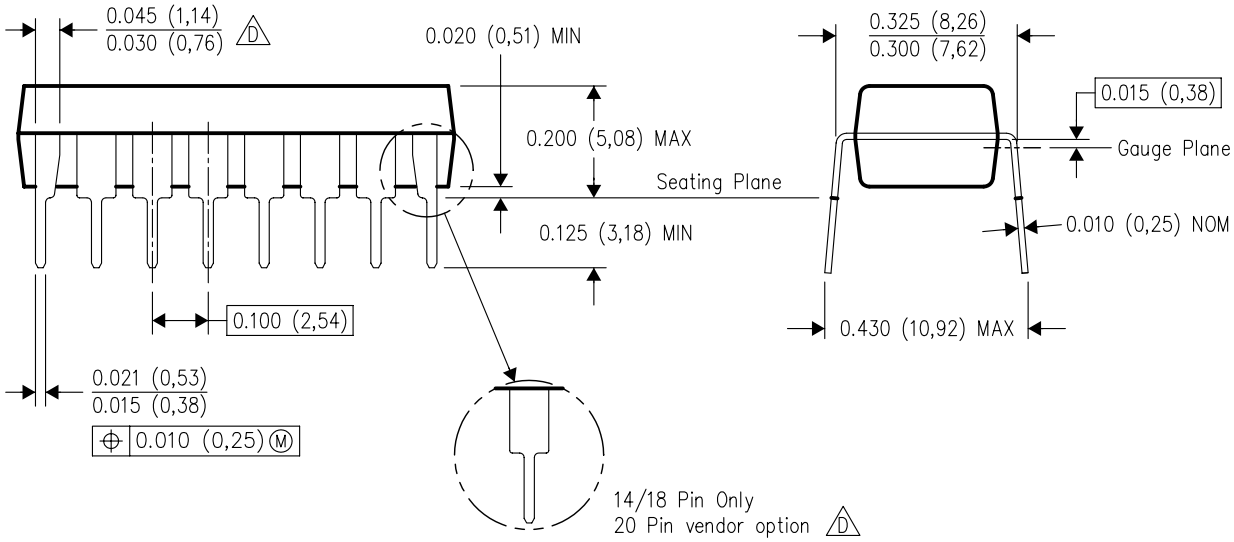

4040049/E 12/2002

NOTES:
A. All linear dimensions are in inches (millimeters).
B. This drawing is subject to change without notice.
C. Falls within JEDEC MS–001, except 18 and 20 pin minimum body length (Dim A).
D. The 20 pin end lead shoulder width is a vendor option, either half or full width.

D (R–PDSO–G14) PLASTIC SMALL–OUTLINE PACKAGE

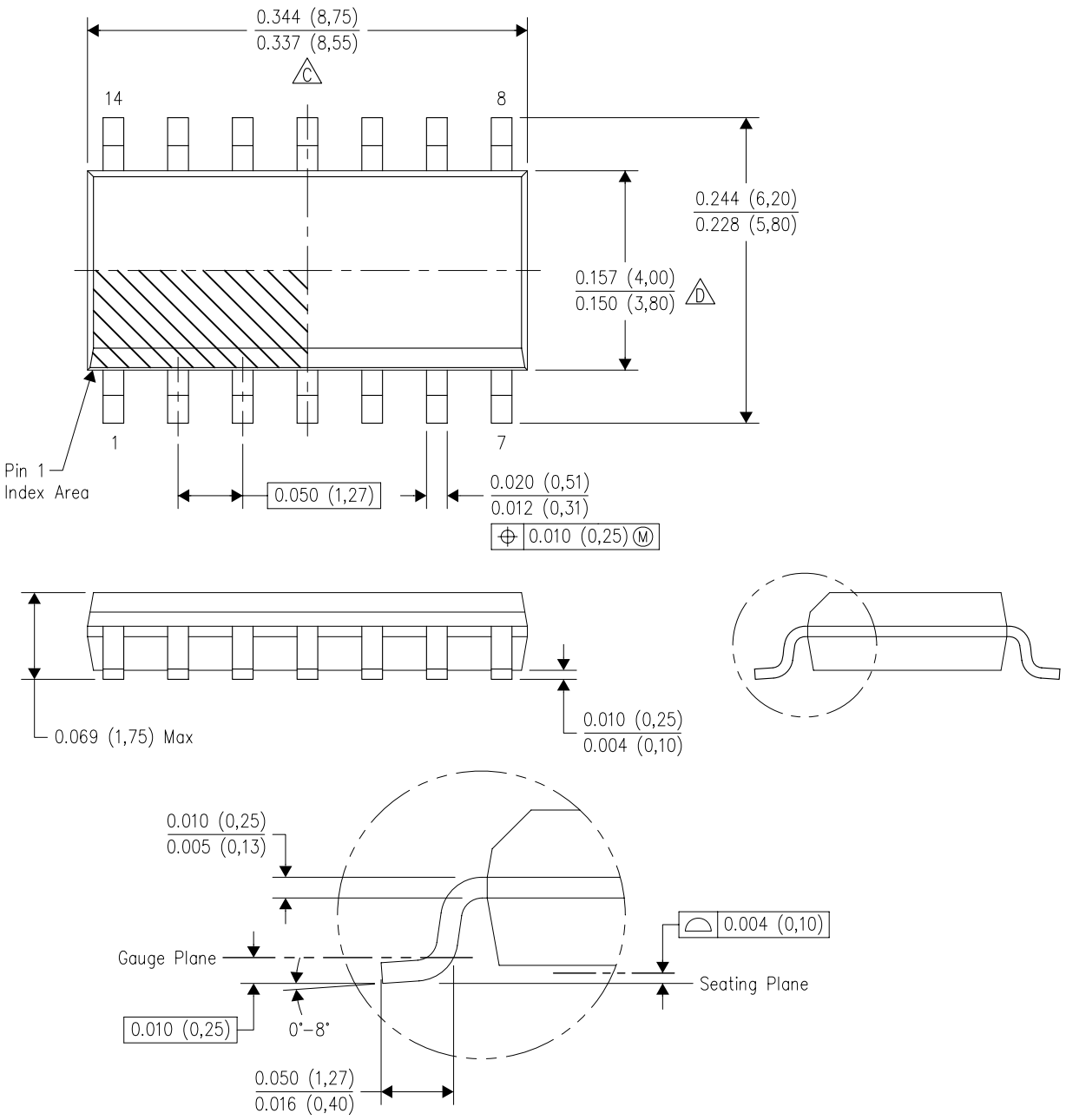

NOTES:
A. All linear dimensions are in inches (millimeters).
B. This drawing is subject to change without notice.
C. Body length does not include mold flash, protrusions, or gate burrs. Mold flash, protrusions, or gate burrs shall not exceed .006 (0,15) per end.
D. Body width does not include interlead flash. Interlead flash shall not exceed .017 (0,43) per side.
E. Reference JEDEC MS–012 variation AB.

D (R–PDSO–G8) PLASTIC SMALL–OUTLINE PACKAGE

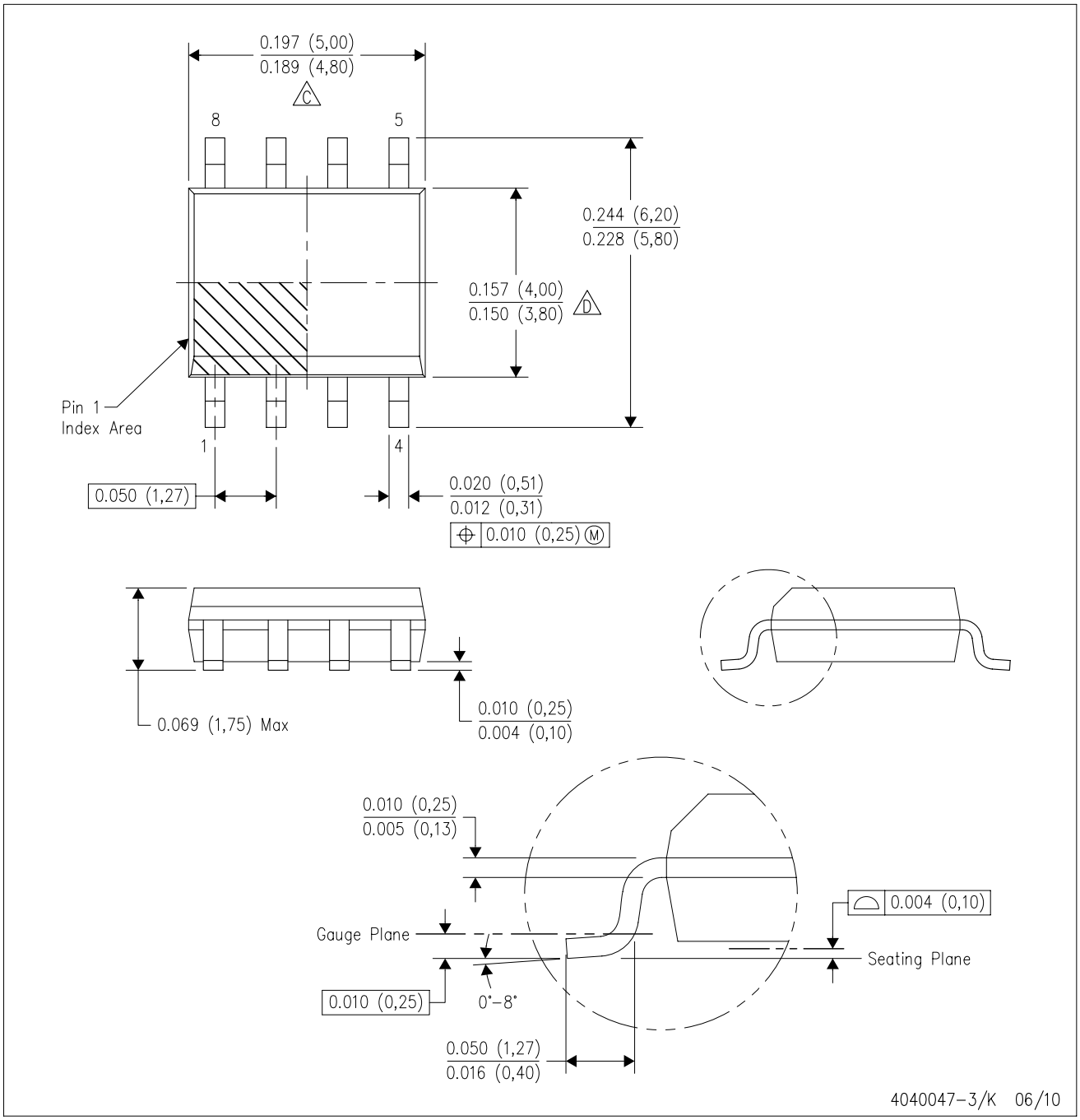

NOTES:
A. All linear dimensions are in inches (millimeters).
B. This drawing is subject to change without notice.
C. Body length does not include mold flash, protrusions, or gate burrs. Mold flash, protrusions, or gate burrs shall not exceed .006 (0,15) per end.
D. Body width does not include interlead flash. Interlead flash shall not exceed .017 (0,43) per side.
E. Reference JEDEC MS–012 variation AA.

MECHANICAL DATA

PS (R-PDSO-G8) **PLASTIC SMALL-OUTLINE PACKAGE**

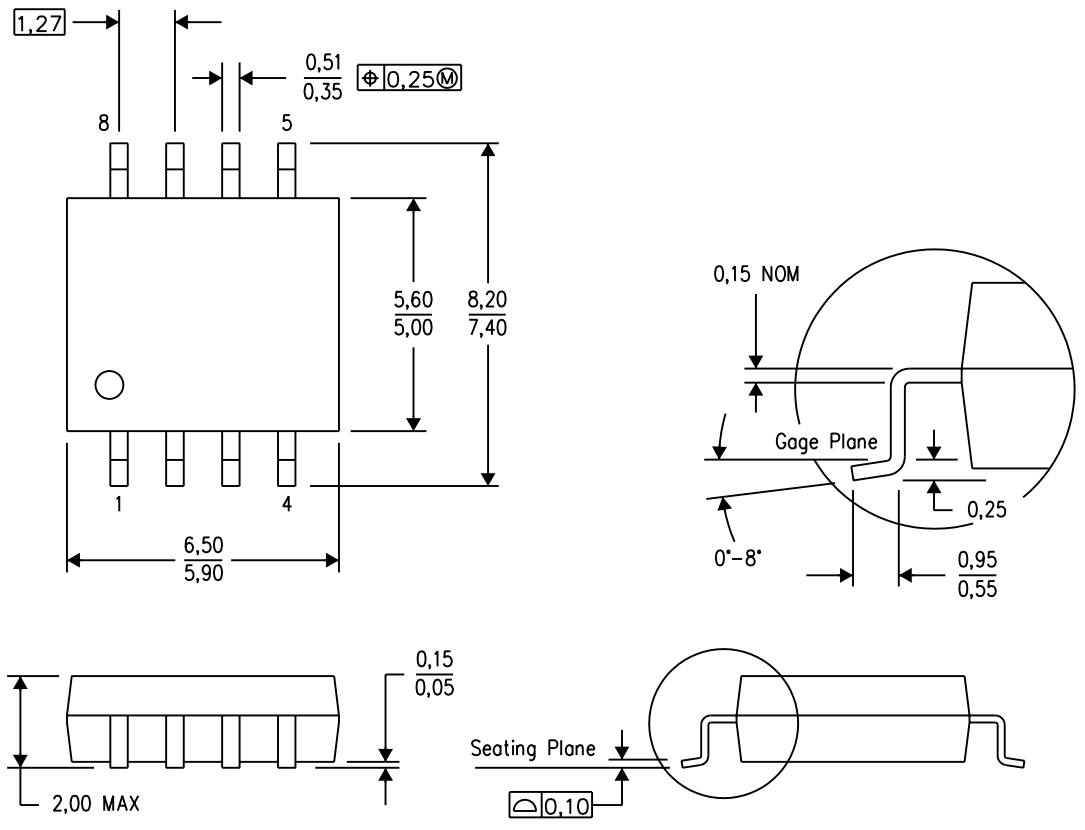

4040063/C 03/03

NOTES:
A. All linear dimensions are in millimeters.
B. This drawing is subject to change without notice.
C. Body dimensions do not include mold flash or protrusion, not to exceed 0,15.

MECHANICAL DATA

NS (R-PDSO-G)** **PLASTIC SMALL-OUTLINE PACKAGE**

14-PINS SHOWN

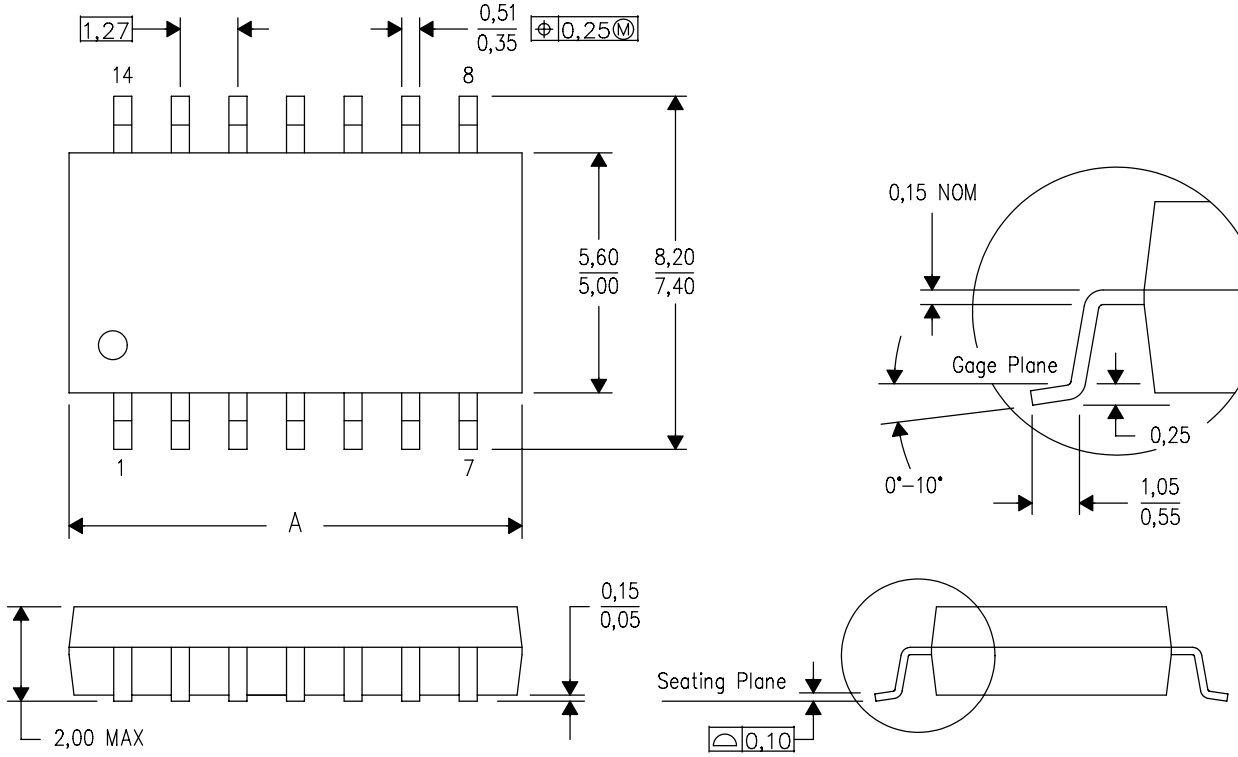

DIM \ PINS **	14	16	20	24
A MAX	10,50	10,50	12,90	15,30
A MIN	9,90	9,90	12,30	14,70

4040062/C 03/03

NOTES:
A. All linear dimensions are in millimeters.
B. This drawing is subject to change without notice.
C. Body dimensions do not include mold flash or protrusion, not to exceed 0,15.

MSSO002E – JANUARY 1995 – REVISED DECEMBER 2001

DB (R-PDSO-G)** **PLASTIC SMALL-OUTLINE**

28 PINS SHOWN

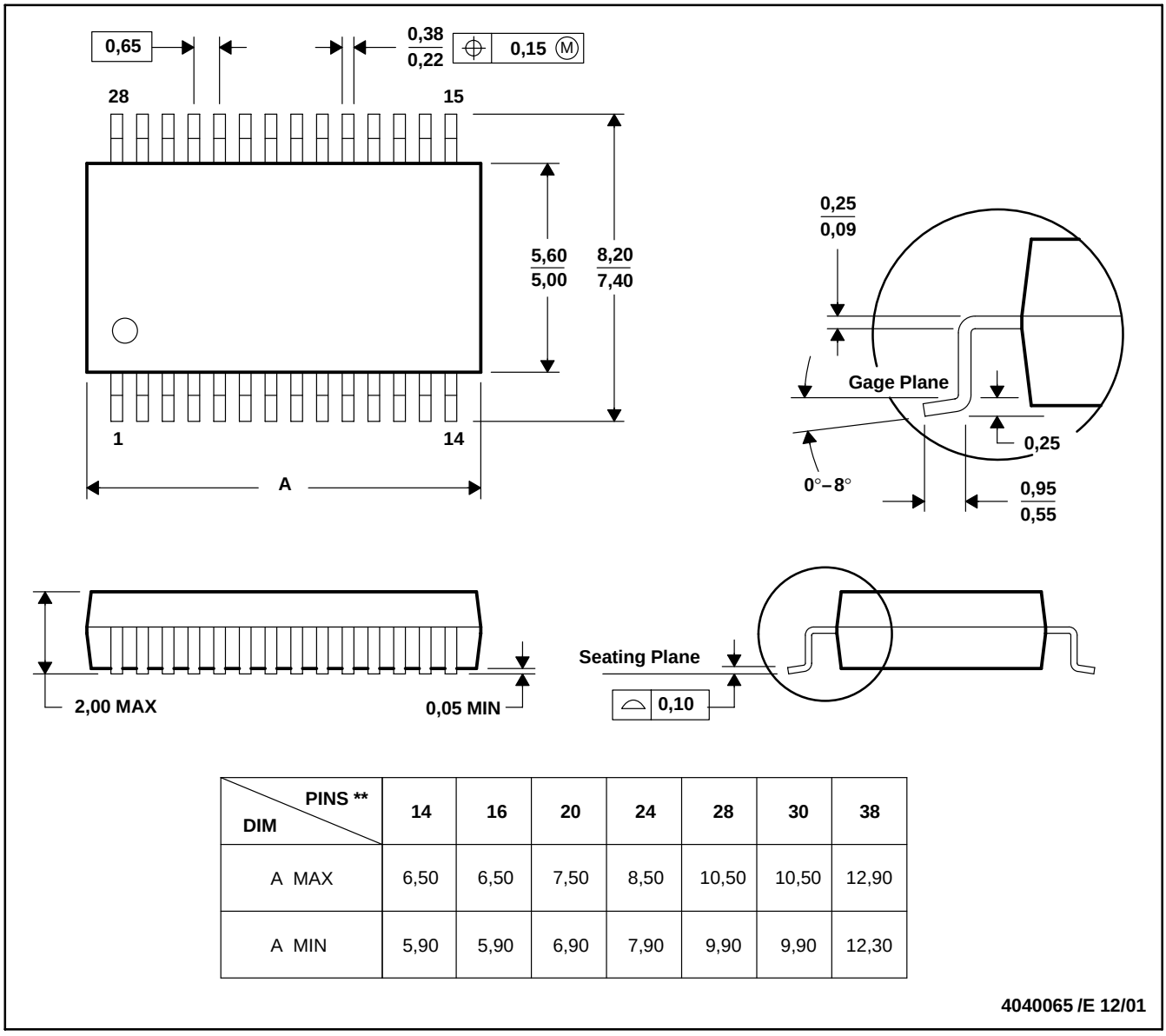

DIM \ PINS **	14	16	20	24	28	30	38
A MAX	6,50	6,50	7,50	8,50	10,50	10,50	12,90
A MIN	5,90	5,90	6,90	7,90	9,90	9,90	12,30

4040065 /E 12/01

NOTES: A. All linear dimensions are in millimeters.
B. This drawing is subject to change without notice.
C. Body dimensions do not include mold flash or protrusion not to exceed 0,15.
D. Falls within JEDEC MO-150

PW (R-PDSO-G)** **PLASTIC SMALL-OUTLINE PACKAGE**

14 PINS SHOWN

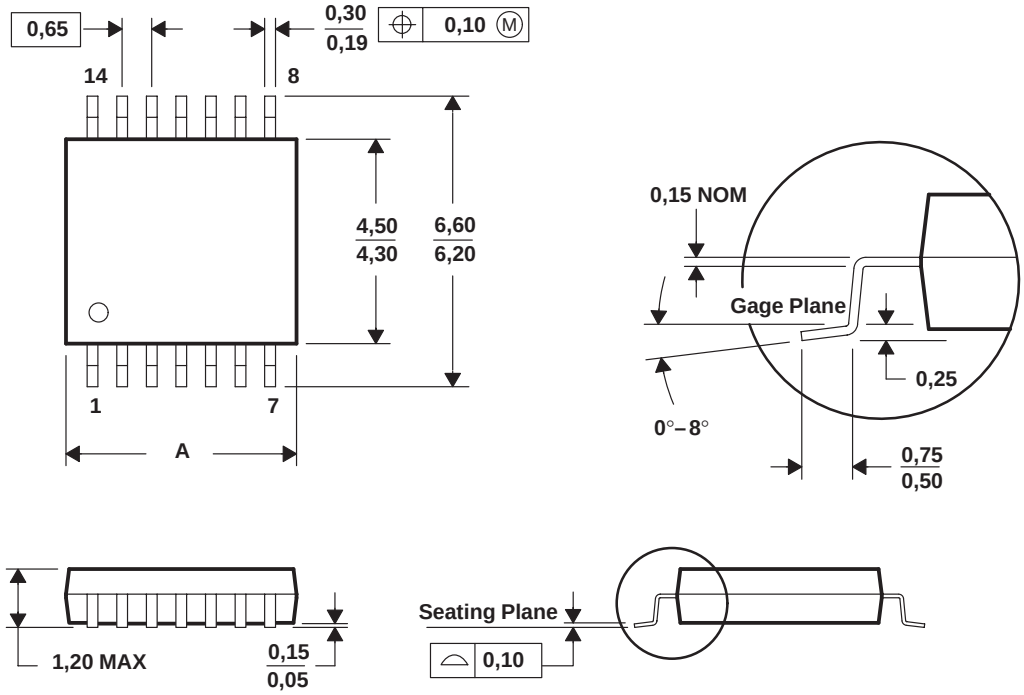

DIM \ PINS **	8	14	16	20	24	28
A MAX	3,10	5,10	5,10	6,60	7,90	9,80
A MIN	2,90	4,90	4,90	6,40	7,70	9,60

4040064/F 01/97

NOTES: A. All linear dimensions are in millimeters.
B. This drawing is subject to change without notice.
C. Body dimensions do not include mold flash or protrusion not to exceed 0,15.
D. Falls within JEDEC MO-153

IMPORTANT NOTICE

Texas Instruments Incorporated and its subsidiaries (TI) reserve the right to make corrections, modifications, enhancements, improvements, and other changes to its products and services at any time and to discontinue any product or service without notice. Customers should obtain the latest relevant information before placing orders and should verify that such information is current and complete. All products are sold subject to TI's terms and conditions of sale supplied at the time of order acknowledgment.

TI warrants performance of its hardware products to the specifications applicable at the time of sale in accordance with TI's standard warranty. Testing and other quality control techniques are used to the extent TI deems necessary to support this warranty. Except where mandated by government requirements, testing of all parameters of each product is not necessarily performed.

TI assumes no liability for applications assistance or customer product design. Customers are responsible for their products and applications using TI components. To minimize the risks associated with customer products and applications, customers should provide adequate design and operating safeguards.

TI does not warrant or represent that any license, either express or implied, is granted under any TI patent right, copyright, mask work right, or other TI intellectual property right relating to any combination, machine, or process in which TI products or services are used. Information published by TI regarding third-party products or services does not constitute a license from TI to use such products or services or a warranty or endorsement thereof. Use of such information may require a license from a third party under the patents or other intellectual property of the third party, or a license from TI under the patents or other intellectual property of TI.

Reproduction of TI information in TI data books or data sheets is permissible only if reproduction is without alteration and is accompanied by all associated warranties, conditions, limitations, and notices. Reproduction of this information with alteration is an unfair and deceptive business practice. TI is not responsible or liable for such altered documentation. Information of third parties may be subject to additional restrictions.

Resale of TI products or services with statements different from or beyond the parameters stated by TI for that product or service voids all express and any implied warranties for the associated TI product or service and is an unfair and deceptive business practice. TI is not responsible or liable for any such statements.

TI products are not authorized for use in safety-critical applications (such as life support) where a failure of the TI product would reasonably be expected to cause severe personal injury or death, unless officers of the parties have executed an agreement specifically governing such use. Buyers represent that they have all necessary expertise in the safety and regulatory ramifications of their applications, and acknowledge and agree that they are solely responsible for all legal, regulatory and safety-related requirements concerning their products and any use of TI products in such safety-critical applications, notwithstanding any applications-related information or support that may be provided by TI. Further, Buyers must fully indemnify TI and its representatives against any damages arising out of the use of TI products in such safety-critical applications.

TI products are neither designed nor intended for use in military/aerospace applications or environments unless the TI products are specifically designated by TI as military-grade or "enhanced plastic." Only products designated by TI as military-grade meet military specifications. Buyers acknowledge and agree that any such use of TI products which TI has not designated as military-grade is solely at the Buyer's risk, and that they are solely responsible for compliance with all legal and regulatory requirements in connection with such use.

TI products are neither designed nor intended for use in automotive applications or environments unless the specific TI products are designated by TI as compliant with ISO/TS 16949 requirements. Buyers acknowledge and agree that, if they use any non-designated products in automotive applications, TI will not be responsible for any failure to meet such requirements.

Following are URLs where you can obtain information on other Texas Instruments products and application solutions:

Products		**Applications**	
Amplifiers	amplifier.ti.com	Audio	www.ti.com/audio
Data Converters	dataconverter.ti.com	Automotive	www.ti.com/automotive
DLP® Products	www.dlp.com	Communications and Telecom	www.ti.com/communications
DSP	dsp.ti.com	Computers and Peripherals	www.ti.com/computers
Clocks and Timers	www.ti.com/clocks	Consumer Electronics	www.ti.com/consumer-apps
Interface	interface.ti.com	Energy	www.ti.com/energy
Logic	logic.ti.com	Industrial	www.ti.com/industrial
Power Mgmt	power.ti.com	Medical	www.ti.com/medical
Microcontrollers	microcontroller.ti.com	Security	www.ti.com/security
RFID	www.ti-rfid.com	Space, Avionics & Defense	www.ti.com/space-avionics-defense
RF/IF and ZigBee® Solutions	www.ti.com/lprf	Video and Imaging	www.ti.com/video
		Wireless	www.ti.com/wireless-apps

Mailing Address: Texas Instruments, Post Office Box 655303, Dallas, Texas 75265
Copyright © 2010, Texas Instruments Incorporated