Holder / No. 810

shock-safe



Horizontal / 3-Pin

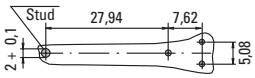

Holes in the printed circuit board: 1,3 +0,1

Cap / No. 815



For 5x20mm Fuses

Cap / No. 816



For 6.3x32mm Fuses

PC Mount, Shocksafe
5x20mm / 6.3x32mm Fuses

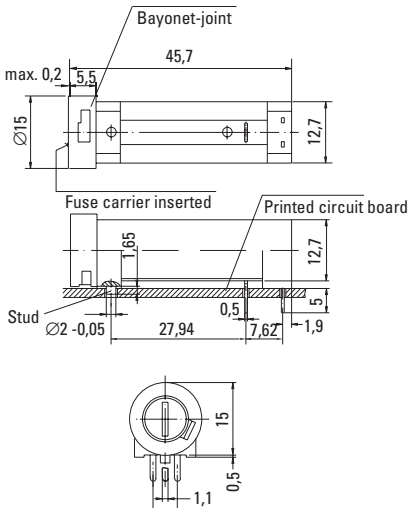

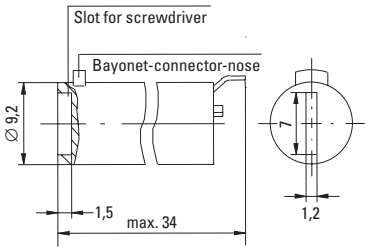

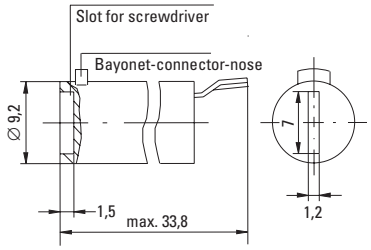

Order Information

Packaging
Bulk (100 pcs.)

Order Numbers

Holder	No. 810 0000 000
Cap, 5x20mm	No. 815 0000 000
Cap, 6.3x32mm	No. 816 0000 000

Note: 1.00 means the number one with two decimal places. 1,000 means the number one thousand.

Specifications

Standard
IEC 60127-6
UL 512
CSA C22.2. No.39

Approvals
VDE: License No. 118611
SEMKO: Certificate No. 9932039
UL Recognized: File No. E 70164
CSA Certified: File No. 47574

Mounting
(3) Solder pins 0.5mm x 1.1mm and plastic stud
The pins spaced at 5.08mm form a common connection.

Protection Class & Category
IP 40 (IEC 60529)
PC2 (IEC 60127-6)

Materials

Holder/Cap:	Black Thermoplastic Polyamide PA 6.6, UL94 V-0
Metal Parts:	Copper alloy, corrosion protected
Terminals:	Solderable, tinned

Electrical Data (23°C)

Rated Voltage:	250V
Rated Current:	6.3A (VDE/SEMKO)
	16A (UL/CSA)
Rated Power :	2.5W (VDE/SEMKO)

Operating Temperature
-25°C to +70°C (consider de-rating)

Climatic Test
-25°C/+70°C/21 days (IEC 60068-2-1...3)

Stock Conditions
+10°C to +60°C
relative humidity ≤ 75% yearly average, without dew, maximum value for 30 days - 95%

Vibration Resistance
24 cycles at 15 min. each (IEC 60068-2-6)
10 - 60Hz at 0.75mm amplitude
60 - 2000Hz at 10g acceleration

Contact Resistance
≤ 5mΩ

Dielectric Strength
> 1.5 kV

Impulse Voltage
4 kV, 50 Hz, 1 min., dry

Insulation Resistance
> 10^3 MΩ (500 VDC, 1 min.)

Solderability
235°C, 3 sec. (Wave)
350°C, 1 sec. (Soldering Iron)

Soldering Heat Resistance
260°C, 5 sec. (IEC 60068-2-20)

Minimum Cross Section
Conducting path - 0.2mm^2

Marking
810, 250V, Approvals

Unit Weight
5.4g (Holder) / 2.5g (Cap)

In our continuing strategy to deliver unparalleled circuit protection solutions, technical expertise and application leadership, we proudly introduce the WICKMANN Group and its products to the Littelfuse portfolio.