Glenair®

Series 80 "Mighty Mouse" Contacts and Tools
Size #23 Crimp Contacts

Size #23 Crimp Contacts


#23 Pin Contact


#23 Socket Contact

Standard size #23 contacts accept #22 to #28 AWG wire. Choose "small bore" versions for #26 to #30 AWG wire. For thermocouple applications, specify alumel or chromel contacts. Contacts are bulk packaged. Terminate with standard M22520 crimper with special positioner.

Contact Type	Wire Size	Material	Part Number	Ø A In.	Ø A mm.	Color Band	Tool Code
Pin	#22 – #28	BeCu	809-001	.0335-.0355	0.851-0.902	None	A, C
Pin	#26 – #30	BeCu	809-042	.0229-.0245	0.582-0.622	Blue	A, D
Pin	#22 – #28	Alumel	809-065A	.0335-.0355	0.851-0.902	None	A, C
Pin	#22 – #28	Chromel	809-065C	.0335-.0355	0.851-0.902	None	A, C
Socket	#22 – #28	BeCu	809-002	.0335-.0355	0.851-0.902	None	A, C
Socket	#26 – #30	BeCu	809-043	.0229-.0245	0.582-0.622	Blue	A, D
Socket	#22 – #28	Alumel	809-066A	.0335-.0355	0.851-0.902	None	A, C
Socket	#22 – #28	Chromel	809-066C	.0335-.0355	0.851-0.902	None	A, C

#23 Pin Contact

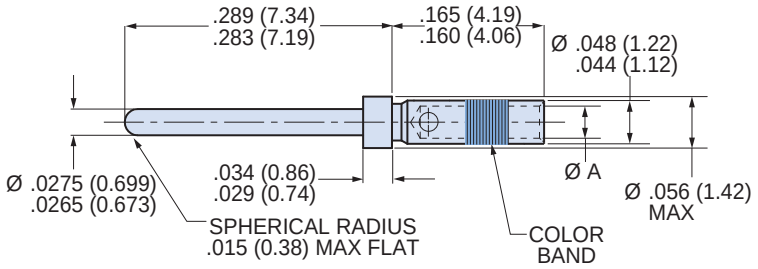

#23 Socket Contact

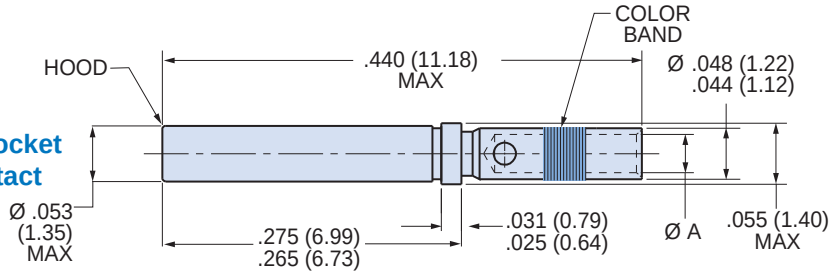

CRIMP TENSILE STRENGTH

Values are in pounds and are minimums.

Wire Gage	Silver or Tin Coated Copper Wire	Nickel Coated Copper Wire
#22	12	8
#24	8	6
#26	5	3
#28	3	2
#30	1.5	1.5

Material and Finish

Beryllium copper alloy per ASTM B196 or B197, 50 microinches gold plated per ASTM B488 Type 3 Code C Class 1,27 over nickel plate per QQ-N-290 Class 2, 50-100 microinches.
Thermocouple contacts: alumel or chromel alloy, unplated, per ANSI 96.1
Socket contact hood: stainless steel, passivated per AMS-QQ-P-35.

Specifications

Current Rating: 5 Amps maximum
Voltage Drop (at 5 Amps and 25° C): 70 millivolts maximum
Temperature Range: -65° to + 200° C
Socket Contact Minimum Separation Force: 0.5 ounces

Crimp Tools and Insertion/Removal Tools

Crimper: 809-015
Positioner: 809-005 (standard). Use P/N 809-057 for small bore contacts 809-065 and 809-066
Standard Insertion/Removal Tool: 809-088

Dimensions in inches (millimeters) and are subject to change without notice.

© 2009 Glenair, Inc.
CAGE Code 06324
Printed in U.S.A.

How To Terminate, Install and Remove Size #23 Contacts

1 ***Set Up Crimp Tool.*** Install proper positioner into crimp tool. The label on the positioner shows the proper tool setting for each wire size. Turn the adjustment wheel to the correct setting.

2 ***Strip Wire.*** Remove wire insulation, taking care to avoid nicking or cutting wire strands. Strip wire to length shown.

3 ***Insert wire*** into contact. The wire should be visible in the inspection hole.

4 Insert contact into crimp tool as shown. Make sure that the contact is fully inserted into the tool. Squeeze handle completely. The ratchet mechanism will not allow a partial crimp. Release handle and remove contact.

5 ***Inspect crimped contact.*** Wire should be fully inserted and the crimp should be uniform in appearance.

Insertion/Extraction Tool 809-088

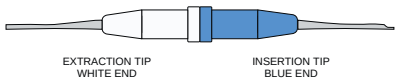

6 ***Install contact into connector.*** Push the contact through the rear grommet until the contact locks into place. This can usually be done by hand without the need for a tool. If the wire gage is #26 or smaller, a tool is helpful. There are two techniques for installing contacts with a tool. One method is to push the contact in by hand, then use the tool to finish the insertion. The other method is to position the insertion tip against the contact shoulder, then insert the contact. Use insertion/extraction tool 809-088 to install contacts. Slide the wire into the groove on the blue end of the tool. Slide the tool tip up the contact until it touches the contact shoulder. **USE CARE TO AVOID DAMAGING THE CONNECTOR.**

7 ***Contact Extraction.*** Use tool 809-088. The white end is used for contact extraction. First, push the wire into the groove of the metal tip. Slide the tip of the tool into the connector. Push the tool into the connector cavity until the tip bottoms in the connector. Avoid wiggling or rocking the tip. This may damage the cavity. A straight push is best. Pinch the wire between your finger and the white plastic grip and slide the tool and contact out of the connector. **Wire insulation diameter greater than 0.045 inches (1.14mm) is too large to work properly with the extraction tool. connector damage is possible.**

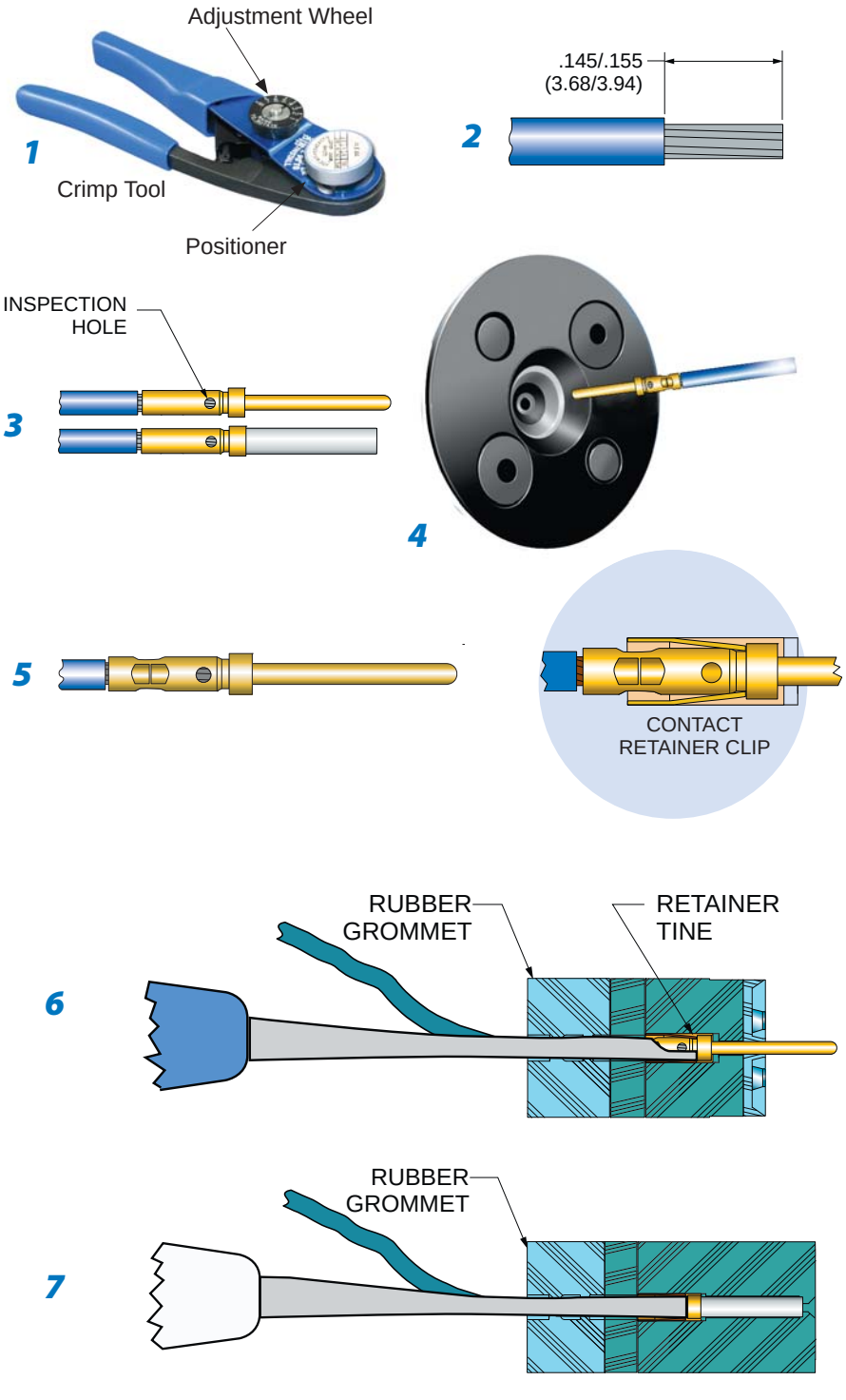

Dimensions in inches (millimeters) and are subject to change without notice.

© 2009 Glenair, Inc.

Glenair®

Series 80 "Mighty Mouse" Contacts and Tools
Adapters, #20 Power Contacts

Adapter for Crimping #20 AWG Wire to Size #23 Contacts

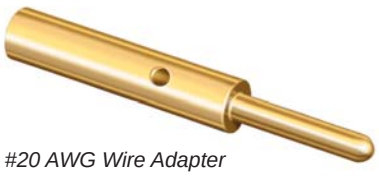

#20 AWG Wire Adapter

Size #22 AWG wire is the largest wire size that fits standard size 23 contacts. Use this adapter to attach larger #20 gage wire. First, crimp wire to adapter, then crimp the adapter into the size #23 contact. Adapters are made of tellurium copper alloy #1452, and are gold plated. Crimp with M22520/1-01 tool and 809-138 (Daniels TH653) positioner. These adapters cannot be removed from connectors.

Adapter Size	Wire Size	Part Number	Tool Code
#22-20	#20	**809-093**	I, K

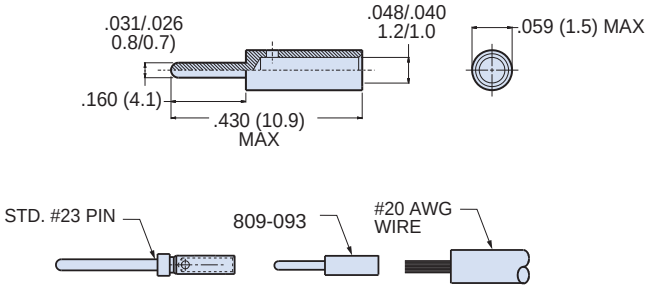

Size #20 Contacts, Crimp Termination



#20 Pin Contact

#20 Socket Contact

Standard size #20 contacts accept #20 to #24 AWG wire. At rated test current of 7.5 amps, the maximum voltage drop is 55 millivolts. Contacts are gold-plated copper alloy. Socket contacts feature stainless steel hoods to protect against probe damage. Approved to SAE-AMS-39029. Contacts are bulk packaged. Terminate with M22520/1-01 crimper and M22520/1-04 positioner.

Contact Type	Wire Size	Part Number	Military Part Number	Color Band 1st	2nd	3rd	Tool Code
Pin	#20 – #24	**850-002-20-363**	M39029/58-363	Orange	Blue	Orange	I. J
Socket	#20 – #24	**850-003-20-357**	M39029/57-357	Orange	Green	Violet	I, J

850-002-20-363

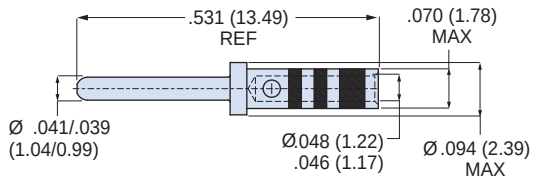

850-003-20-357

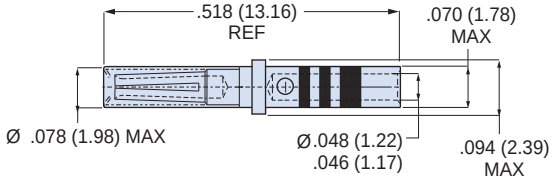

Dimensions in inches (millimeters) and are subject to change without notice.

© 2009 Glenair, Inc.

CAGE Code 06324

Printed in U.S.A.

Size #16 Power Contacts, Crimp Termination

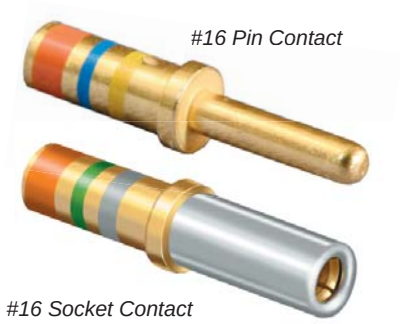

#16 Pin Contact

#16 Socket Contact

Standard size #16 contacts accept #16 to #20 AWG wire. At rated test current of 13 amps, the maximum voltage drop is 74 millivolts. Contacts are gold-plated copper alloy. Socket contacts feature stainless steel hoods to protect against probe damage. Approved to SAE-AMS-39029. Contacts are bulk packaged. Terminate with M22520/1-01 crimper and M22520/1-04 positioner.

Contact Type	Wire Size	Part Number	Military Part Number	Color Band 1st	2nd	3rd	Tool Code
Pin	#16 – #20	**809-110**	M39029/58-364	Orange	Blue	Yellow	I. J
Socket	#16 – #20	**809-111**	M39029/57-358	Orange	Green	Gray	I, J

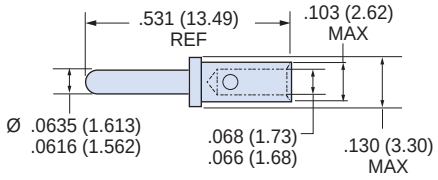

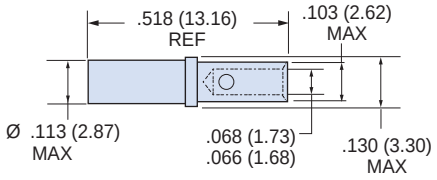

Size #12 Power Contacts, Crimp Termination



#12 Pin Contact

#12 Socket Contact

Standard size #12 contacts accept #12 to #14 AWG wire. At rated test current of 23 amps, the maximum voltage drop is 63 millivolts. Contacts are gold-plated copper alloy. Socket contacts feature stainless steel hoods to protect against probe damage. Approved to SAE AS39029. Contacts are bulk packaged. Terminate with M22520/1-01 crimper and M22520/1-04 positioner.

Contact Type	Wire Size	Part Number	Military Part Number	Color Band 1st	2nd	3rd	Tool Code
Pin	#12 – #14	**809-112**	M39029/58-365	Orange	Blue	Green	I, J
Socket	#12 – #14	**809-113**	M39029/57-359	Orange	Green	White	I, J

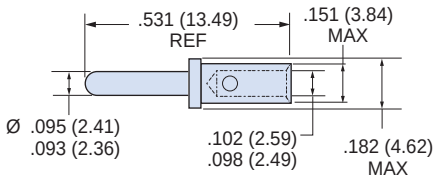

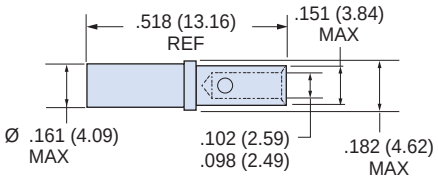

Dimensions in inches (millimeters) and are subject to change without notice.

© 2009 Glenair, Inc.
CAGE Code 06324
Printed in U.S.A.

Glenair®

Series 80 "Mighty Mouse" Contacts and Tools
Coaxial Contacts

Size #16 Coaxial Contacts, Crimp Termination



These #16 contacts accept 50 ohm and 75 ohm coaxial cable. Inner contact is rated at 1 amp, the outer contact 12 amps. DWV voltage rating is 800 Vac rms sea level, 250 Vac at 50,000 feet. Contacts are packaged individually and are unassembled with instruction sheet. One contact consists of outer contact , fluorocarbon dielectric, inner contact and shield crimp sleeve. Inner and outer contacts are gold-plated copper alloy. Approved to SAE AS39029. VSWR rating 1.5:1 maximum up to 700 MHz. 5000 megohm insulation resistance.

Type	Cable Size	Part Number	Military Part Number	Color Band 1st	2nd	3rd	Tool Code
Pin	RG174, RG316, RG179	809-114	M39029/76-424	Yellow	Red	Yellow	A, E, L, M
Pin	RG178	809-115	M39029/76-425	Yellow	Red	Green	A, E, L, M
Socket	RG174, RG316, RG179	809-116	M39029/78-432	Yellow	Orange	Red	A, E, L, M
Socket	RG178	809-117	M39029/78-433	Yellow	Orange	Orange	A, E, L, M

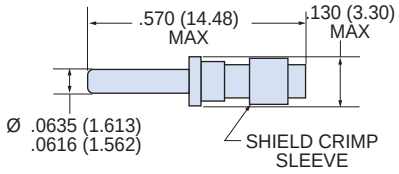

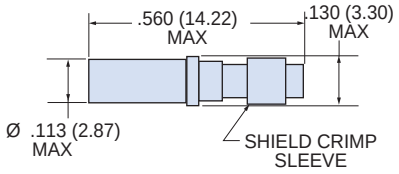

Size #12 Coaxial Contacts, Crimp Termination



These #12 contacts accept 50 ohm and 75 ohm coaxial cable. Inner contact is rated at 1 amp, the outer contact 12 amps. DWV voltage rating is 1000 Vac rms sea level, 250 Vac at 50,000 feet. Contacts are packaged individually and shipped unassembled with instruction sheet. One contact consists of outer contact , fluorocarbon dielectric, inner contact and shield crimp sleeve. Inner and outer contacts are gold-plated copper alloy. Approved to SAE AS39029. VSWR rating 1.5:1 maximum up to 700 MHz. 5000 megohm insulation resistance.

Type	Cable Size	Part Number	Military Part Number	Color Band 1st	2nd	3rd	Tool Code
Pin	RG174, RG316, RG179	809-118	M39029/28-211	Red	Brown	Brown	A, G, N, O
Pin	RG180	809-119	M39029/28-409	Yellow	Black	White	A, G, N, O
Socket	RG174, RG316, RG179	809-120	M39029/27-210	Red	Brown	Black	A, G, N, O
Socket	RG180	809-121	M39029/27-402	Yellow	Black	Red	A, G, N, O

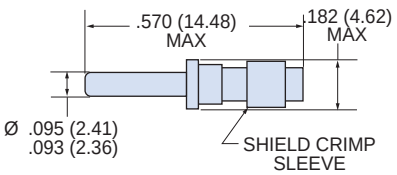

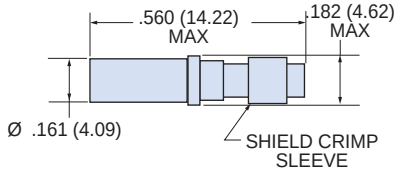

Dimensions in inches (millimeters) and are subject to change without notice.

© 2009 Glenair, Inc.
CAGE Code 06324
Printed in U.S.A.

Size #12, 50 Ohm Matched Impedance Coaxial Contacts

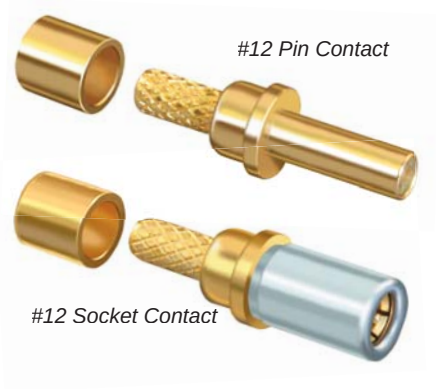

These contacts offer improved frequency response compared to standard coaxial contacts above. VSWR is 1.32:1 at 3GHz . Nominal impedance is 50 ohms. Insertion loss at 3GHz is 0.20 dB maximum. Inner contact is rated at 1 amp, the outer contact 12 amps. DWV voltage rating is 1000 Vac rms sea level, 250 Vac at 50,000 feet. Contacts are packaged individually and shipped unassembled with instruction sheet. Inner and outer contacts are gold-plated copper alloy. 5000 megohm insulation resistance. Terminate crimp type coaxial center contact with hand tool 809-128 (Daniels MH992). Terminate cable braid to contact with 809-129 (Daniels HX4) parallel action crimp tool and 809-120 (Daniels Y196) hex die.

Contact Type	Cable Type	Part Number	Termination	Fig.	Tool Code
Pin	M17/113-RG316	**852-016-01**	Crimp	1	B, H, P, Q
Pin	M17/152-00001(RG316DS)	**852-016-02**	Crimp	1	B, H, P, Q
Pin	M17/93-RG178	**852-016-03**	Crimp	1	B, F, P, Q
Pin	TFLEX-405	**852-018**	Solder	2	(No Tool)
Socket	M17/113-RG316	**852-015-01**	Crimp	3	B, H, P, Q
Socket	M17/152-00001(RG316DS)	**852-015-02**	Crimp	3	B, H, P, Q
Socket	M17/93-RG178	**852-015-03**	Crimp	3	B, F, P, Q
Socket	TFLEX-405	**852-017**	Solder	4	(No Tool)

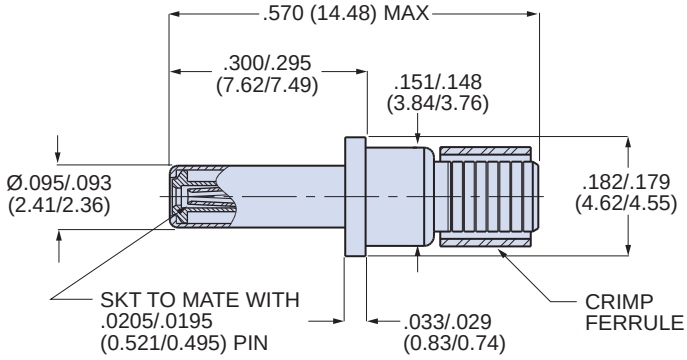

Figure 1

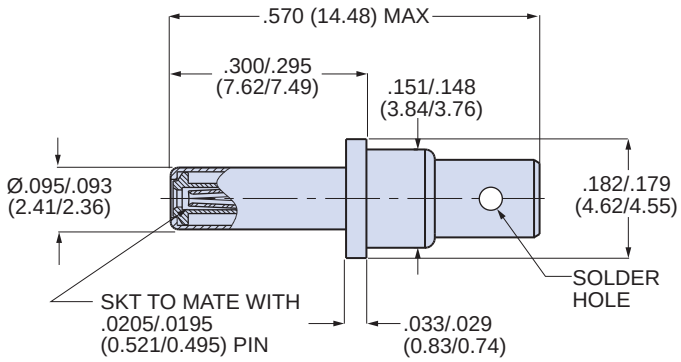

Figure 2

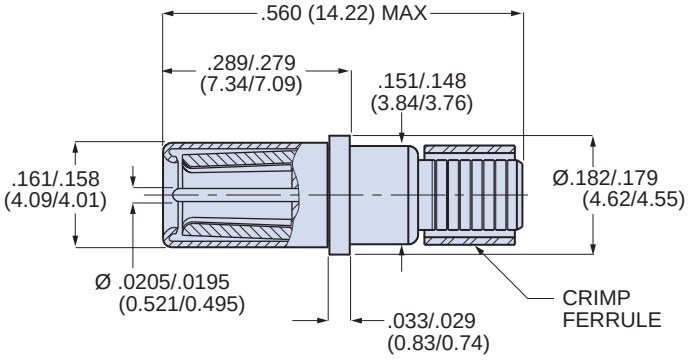

Figure 3

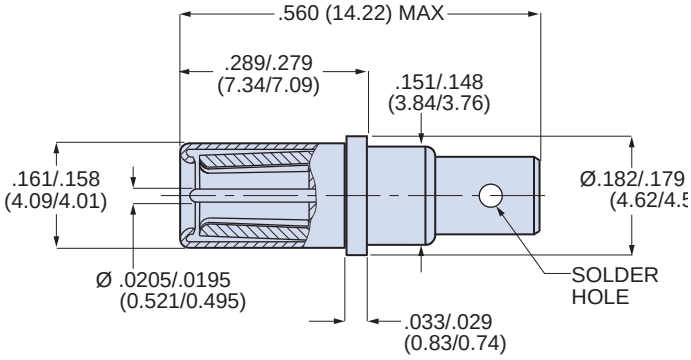

Figure 4

Dimensions in inches (millimeters) and are subject to change without notice.

© 2009 Glenair, Inc.
CAGE Code 06324
Printed in U.S.A.

Series 80 "Mighty Mouse" Contacts and Tools
Pneumatic Contacts 857-010 and 857-011

Size #12 Pneumatic Contacts



#12 Pin Contact



#12 Socket Contact

Stainless steel pneumatic contacts attach to 3/32 inch (2.38) diameter tubing. Socket contact has o-ring and PTFE backup washers. Contacts snap into size #12 connector cavities. Ideal for pitot tube connections, these pneumatic contacts are rated for 100 PSI maximum air pressure. No installation tool is required. Remove contacts with plastic extraction tool 809-132.

Contact Type	Tube I.D.	Part Number
Pin	.094 (2.38)	**857-011**
Socket	.094 (2.38)	**857-010**

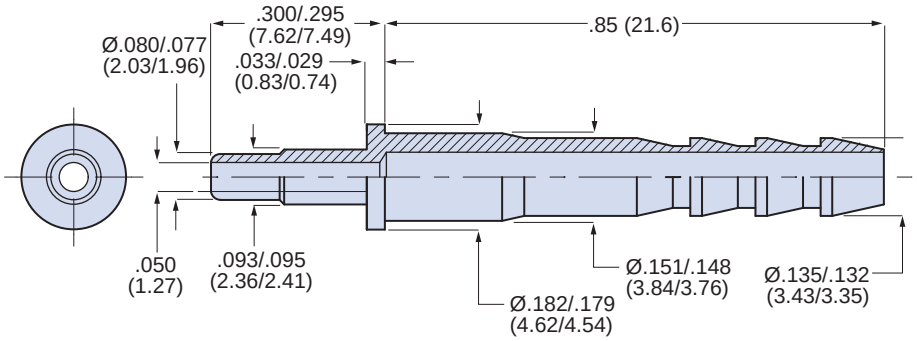

857-011 Pin Contact

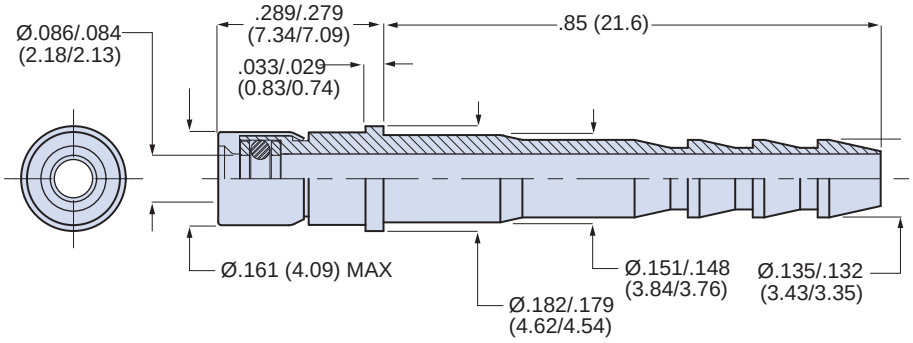

857-010 Socket Contact

Material and Finish

Body and Cap: stainless steel, passivated
O-ring: fluorosilicone
Washers: PTFE

Dimensions in inches (millimeters) and are subject to change without notice.

© 2009 Glenair, Inc.

CAGE Code 06324

Printed in U.S.A.