OSCILENT Corporation **Data Sheet**

telephone 949 252 0522

BACK

Product Category: RF SAW Filter

Part Number	Package	Application	Last Modified
802-RF810.0M-A	3.0 x 3.0 SMD	Wireless	Mar.10, 2007

TYPE :

Wireless, RF SAW Filter



PART NUMBER :

802-RF810.0M-A

OPERATING CONDITIONS / ELECTRICAL CHARACTERISTICS

PARAMETERS	Condition	Minimum	Typical	Maximum	Units
Center Frequency (Fo)	-	-	810.0	-	MHz
Maximum Insertion Loss	805.0~ 815.0 MHz	-	2.9	3.5	dB
Source Impedence (single ended)*	-	-	50	-	ohm
Load Impendance (single ended)*	-	-	50	-	ohm
Operating Temperature Range	-	-40	-	+85	ºC
Amplitude Ripple	805.0~ 815.0 MHz	-	0.6	1.5	dBp-p
10 dB Bandwidth	-	-	24.5	30.0	MHz
20 dB Bandwidth	-	-	30.0	40.0	MHz
40 dB Bandwidth	-	-	49.0	60.0	MHz
Group Delay Variation	805.0~ 815.0 MHz	-	20.0	40.0	nsec
Maxium DC Voltage	-	-	-	5	V
Maxium Input Power	-	-	-	10	dBm

* No Matching Network(Ref. Testing Environment Circut as shown below)

PACKAGE OUTLINE (mm)

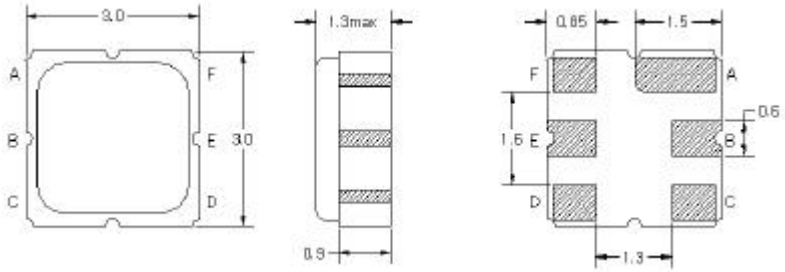

PIN LAYOUT	
A	Ground
B	Out
C	Ground
D	Ground
E	In
F	Ground

TEST FIXTURE

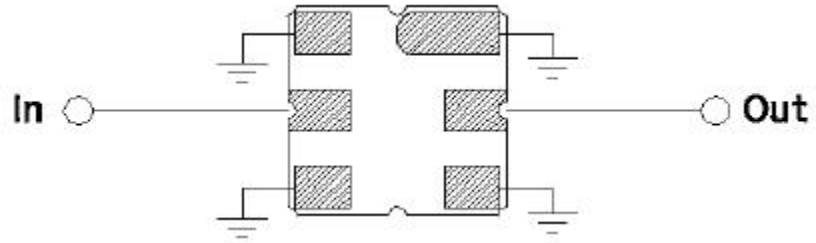

Source/ Load Impedance = 50 ohms

FREQUENCY RESPONSE

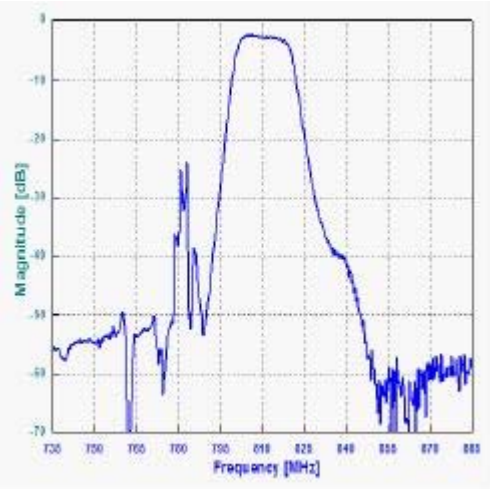

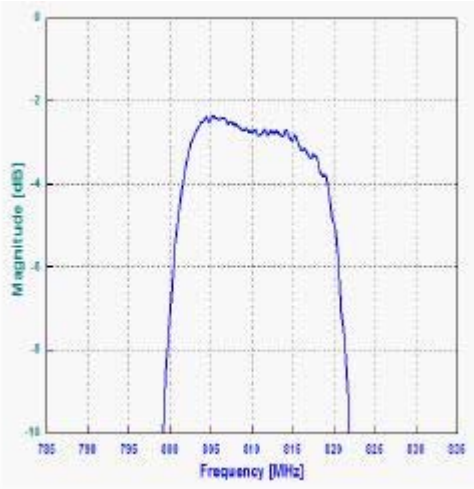

GROUP DELAY

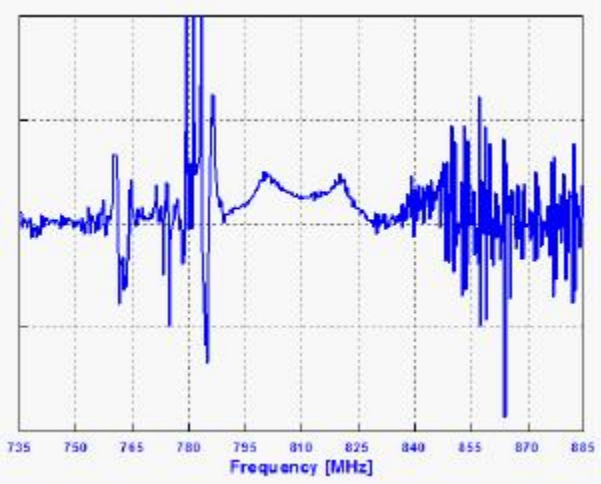

SMITH CHART

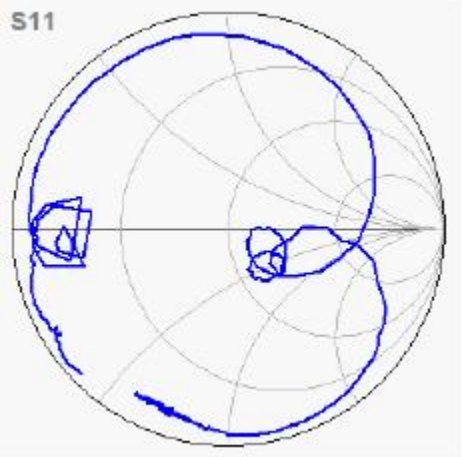

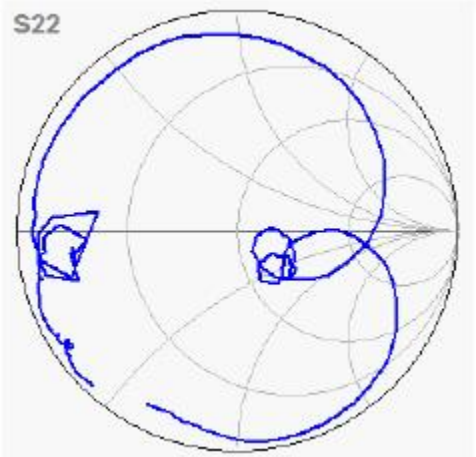

Oscilent Corporation - CALL **949.252.0522**
18195 East McDurmott Street . Building D . Irvine . CA 92614 . USA
Fax: 949.252.0599 . E-Mail: Sales@Oscilent.com

Part No.: 802-RF810.0M-A